This document is scheduled to be published in the
Federal Register on 06/30/2022 and available online at
federalregister.gov/d/2022-13658, and on **govinfo.gov**

DEPARTMENT OF TRANSPORTATION

National Highway Traffic Safety Administration

49 CFR Part 571

Docket No. NHTSA-2022-0051

RIN 2127-AK95

Federal Motor Vehicle Safety Standards; Child Restraint Systems, Child Restraint Systems--Side Impact Protection, Incorporation by Reference

AGENCY: National Highway Traffic Safety Administration (NHTSA), Department of Transportation (DOT).

ACTION: Final rule.

SUMMARY: This final rule amends Federal Motor Vehicle Safety Standard (FMVSS) (Standard) No. 213, "Child restraint systems," and adds FMVSS No. 213a, which is referenced by Standard No. 213. This final rule fulfills a statutory mandate set forth in the "Moving Ahead for Progress in the 21st Century Act" (MAP-21) that directed the Secretary of Transportation (NHTSA by delegation) to issue a final rule to improve the protection of children seated in child restraint systems during side impacts.

DATES: *Effective date*: August 1, 2022. The incorporation by reference of the publications listed in the rule is approved by the Director of the Federal Register as of August 1, 2022.

Compliance date: June 30, 2025. Optional early compliance is permitted.

Petitions for reconsideration: Petitions for reconsideration of this final rule must be received no later than August 15, 2022.

ADDRESSES: Petitions for reconsideration of this final rule must refer to the docket and notice number set forth above and be submitted to the Administrator, National Highway Traffic Safety Administration, 1200 New Jersey Avenue SE, Washington, DC 20590. Note that all petitions received will be posted without change to http://www.regulations.gov, including any personal information provided. To facilitate social distancing due to COVID-19, please email a copy of the petition to nhtsa.webmaster@dot.gov.

Privacy Act. The petition will be placed in the docket. Anyone is able to search the electronic form of all documents received into any of our dockets by the name of the individual submitting the comment (or signing the comment, if submitted on behalf of an association, business, labor union, etc.). You may review DOT's complete Privacy Act Statement in the Federal Register published on April 11, 2000 (Volume 65, Number 70; Pages 19477-78) or you may visit https://www.transportation.gov/individuals/privacy/privacy-act-system-records-notices.

FOR FURTHER INFORMATION CONTACT: For technical issues, you may call Cristina Echemendia, Office of Crashworthiness Standards, telephone 202-366-6345, email Cristina.Echemendia@dot.gov. For legal issues, Deirdre Fujita or Hannah Fish, Office of the Chief Counsel, telephone 202-366-2992, email Dee.Fujita@dot.gov or Hannah.Fish@dot.gov. The mailing address of these officials is the National Highway Traffic Safety Administration, U.S. Department of Transportation, 1200 New Jersey Avenue, S.E., West Building, Washington, D.C., 20590.

SUPPLEMENTARY INFORMATION:

Table of Contents

I. Executive Summary

II. Safety Need

III. Statutory Mandate

IV. Guiding Principles

V. Overview of the NPRM and Comments Received

a. Overview of the NPRM
b. Summary of the comments

VI. Response to the Comments (Wide-Reaching Issues)

a. Are efforts better spent elsewhere on child restraint systems?
b. Will child restraints become excessively large and heavy?
c. More bulk is not necessarily advantageous; the 2017 test program
d. The 40-lb limit for coverage of the standard
e. Improving side impact protection for children older than 3-years-old
f. Weight as a limiting factor
g. Labeling CRSs for children weighing over 18.1 kg (40 lb)
    1. Label as "not tested in side impacts"
    2. Head under window sill

VII. Aspects of the FMVSS 213a Test Procedure

a. Overview
b. Side impact seat assembly characteristics
    1. Seat characteristics
        i. Rear seat cushion stiffness
        ii. Lower Anchorages and top tether anchorages of the CRAS
    2. Door characteristics
        i Beltline height
        ii. Door and armrest thickness and stiffness
    3. Honeycomb
    4. SISA technical drawings
    5. Other testing issues
        i. Right-side impacts
        ii. Sliding seat bearings
        iii. Seat belt interference
c. Sled kinematic parameters
    1. General
    2. Specific issues
        i. Sliding seat acceleration profile
        ii. Tuning the test to account for lighter dummies
        iii. Acceleration corridor
    3. Door parameters
    4. Relative door velocity profile
    5. Relative velocity at impact time (T_0) – tolerance
    6. Longitudinal crash component

d. Test set up and procedure
    1. CRS attachment
        i. Lower anchor and/or seat belt CRS installation
        ii. Tethered vs. non-tethered CRS installation
        iii. Distance between edge of armrest and edge of seat
e. Dummy positioning
f. Dummy selection
g. Miscellaneous comments on the test procedure, including test setup, sled instrumentation, and data processing
h. Additional changes

VIII. Performance Requirements

a. Q3s
    1. Q3s sourcing
    2. Biofidelity issues
    3. Aspects of testing with the Q3s
        i. Reversibility
        ii. HIII 3-year-old child test dummy as an alternative
    4. Q3s performance measures
        i. Head Injury Criterion (HIC)
        ii. Head contact (not assessed)
        iii. Chest deflection

b. CRABI 12-month-old
    1. Alternative ATDs
    2. Durability
    3. Head-to-door contact
    4. Component test
    5. CRS system integrity and energy distribution

IX. Repeatability and Reproducibility

X. Lead Time and Effective Date

XI. Regulatory Notices and Analyses

This final rule amends FMVSS No. 213, "Child restraint systems," to establish side impact performance requirements for child restraint systems (CRS) designed to seat children weighing up to 18.1 kilograms (kg) (40 pounds (lb)), or for children in a height range that includes heights up to 1100 millimeters (43.3 inches.) The side impact performance requirements are established in a new FMVSS No. 213a, which is referenced by Standard No. 213. This final rule fulfills a statutory mandate set forth in MAP-21 that directed the Secretary of Transportation (NHTSA by delegation) to issue a final rule to improve the protection of children seated in child restraint systems during side impacts.

Standard No. 213a requires child restraints designed to seat children weighing up to 18.1 kg (40 lb), or for children in a height range that includes heights up to 1100 millimeters (43.3 inches) to meet performance criteria when tested in a dynamic test replicating a vehicle-to-vehicle side impact. The child restraints must provide proper restraint, manage side crash forces, and protect against harmful head and chest contact with intruding structures. In addition, child restraints will be required to meet other performance requirements in the sled test to ensure,

among other things, the restraint can withstand crash forces from a side impact without collapsing or fragmenting in a manner that could harm the child. This new standard will reduce the number of children killed or injured in side crashes.

I. Executive Summary

Front and side crashes account for most child occupant fatalities. FMVSS No. 213 currently specifies performance requirements that child restraint systems (CRSs) must meet in a sled test simulating a frontal impact. This final rule expands the standard to adopt a side impact test. Child restraints subject to this final rule must pass the new side impact test in addition to the frontal impact test.

Impacts to the side of a vehicle rank almost equal to frontal crashes as a source of occupant fatalities and serious injuries to children ages 0 to 12 years. Side impacts are especially dangerous when the impact is on the passenger compartment because, unlike a frontal or rear-end crash, there are no substantial, energy absorbing structures between the occupant and the impacting vehicle or object. The door collapses into the passenger compartment and the occupants contact the door relatively quickly after the crash at a high relative velocity.[1]

In a typical vehicle-to-vehicle side impact similar to the one represented in Standard No. 214, "Side impact protection" (49 CFR 571.214), the striking vehicle first interacts with the door structure of the struck vehicle and commences to crush the door, causing it to intrude laterally into the vehicle compartment. The striking vehicle then engages the sill of the struck vehicle and begins to push the struck vehicle away. At this point, the occupant sitting on the struck side of the vehicle experiences the struck vehicle seat moving away from the impacting vehicle while the door intrudes towards him or her. The intruding door impacts the occupant and the occupant is accelerated with the door along the impact direction until the occupant reaches the velocity of the struck and striking vehicle.

[1] Kahane, November 1982, NHTSA Report No. DOT HS 806 314.

Standard No. 214, protects against unreasonable risk of injury or death to occupants in vehicle-to-vehicle crashes and other side crashes. The standard has benefited all occupants,[2] but due to their size and fragility, infants and young children are dependent on child restraint systems to supplement those protections. Child restraints with internal harnesses (commonly called "car seats," "child seats" or "safety seats") are highly effective safety devices. Although child seats are not currently subject to side impact testing, NHTSA estimates that these types of child restraints are already 42 percent effective in preventing death in side crashes of children 0- to 3-years-old.[3] This estimated degree of effectiveness is high, and is only 11 percentage points lower than Child Restraint System (CRS) effectiveness in frontal crashes (53 percent). Child safety seats are effective because they restrain the child within the child seat and prevent harmful contact with interior vehicle components, and have padding and an outer shell structure that shields the child and absorbs some of the crash forces.

Because MAP-21 directed NHTSA to amend FMVSS No. 213 to improve side impact protection, NHTSA designed this final rule to work within the framework of the existing frontal standard. Child restraint systems are tested in FMVSS No. 213 when attached to a standardized seat assembly representative of a passenger vehicle seat. Child restraints are tested with anthropomorphic test devices (ATDs) (test dummies) representative of the children for whom the CRS is recommended.[4] FMVSS No. 213 requires child restraints to limit the amount of inertial

---

[2] Kahane, C. J. (2015, January). Lives saved by vehicle safety technologies and associated Federal Motor Vehicle Safety Standards, 1960 to 2012 – Passenger cars and LTVs – With reviews of 26 FMVSS and the effectiveness of their associated safety technologies in reducing fatalities, injuries, and crashes. (Report No. DOT HS 812 069). Washington, DC: National Highway Traffic Safety Administration. Link: https://crashstats.nhtsa.dot.gov/Api/Public/ViewPublication/812069

[3] NHTSA conducted an analysis of the Fatality Analysis Reporting System (FARS) data files of real world fatal non-rollover frontal and side crashes of passenger cars and light trucks and vans involving children for the years 1995 to 2009. From this analysis, the agency estimated the effectiveness of CRSs in preventing fatalities among 0- to 3-year-old children to be 42 percent in side crashes and 53 percent in frontal crashes. The analysis method is similar to that reported in the NCSA Research Note, "Revised Estimates of Child Restraint Effectiveness," DOT HS 96855 and is also detailed in the technical report in the NPRM docket (https://www.regulations.gov/document/NHTSA-2014-0012-0002).

[4] Standard No. 213 specifies the use of test dummies representing a newborn, a 12-month-old, 3- and 6-year-old, weighted 6-year-old, and 10-year-old child. The ATDs other than the newborn are equipped with instrumentation measuring crash forces, but NHTSA restricts some measurements from the weighted 6-year-old and 10-year-old dummies due to technical limits of the dummies.

load that can be exerted on the head and chest of the dummy during the dynamic test. The standard requires child restraints to meet head excursion[5] limits to reduce the possibility of head injury from contact with vehicle interior surfaces and ejection. Child restraints must also maintain system integrity (i.e., not fracture or separate in such a way as to harm a child), and have no contactable surface that can harm a child in a crash. There are requirements to ensure belt webbing can safely restrain the child, and that buckles can be swiftly unlatched after a crash by an adult but cannot be easily unbuckled by an unsupervised child. Child restraints other than booster seats and harnesses[6] must pass performance requirements when attached to the standard seat assembly with only a lap belt,[7] and, in a separate assessment, with only the lower anchorages of a child restraint anchorage system (CRAS).[8] The CRSs must meet more stringent head excursion requirements in another test where a top tether, if provided, may be attached. Belt-positioning (booster) seats are tested on the standard seat assembly using a Type 2 (lap and shoulder) belt.

This final rule establishes requirements for a side impact test that are equivalent to those described above, and makes child restraint systems even more protective of child occupants than they are now. It adopts performance thresholds that ensure child restraints protect against unreasonable risk of head and chest injury in side crashes, and a performance test that objectively assesses and assures achievement of such performance.

---

[5] Head excursion refers to the distance the dummy's head translates forward in FMVSS No. 213's simulated frontal crash test.

[6] These types of child restraint systems are defined in FMVSS No. 213.

[7] As explained in more detail below, NHTSA published an NPRM on November 2, 2020 (85 FR 69388) to amend the standard seat assembly in FMVSS No. 213 "to better simulate a single representative motor vehicle rear seat." Among other matters, the NPRM proposes replacing the lap belt test with a lap and shoulder belt (Type 2 belt) test.

[8] Commonly called "LATCH," which refers to Lower Anchors and Tethers for Children, an acronym developed to refer to the child restraint anchorage system required by FMVSS No. 225 for installation in motor vehicles (49 CFR 571.225, "Child restraint anchorage systems"). A child restraint anchorage system consists of two lower anchorages, and one upper tether anchorage. Each lower anchorage includes a rigid round rod, or "bar," onto which a hook, a jaw-like buckle or other connector can be snapped. The bars are located at the intersection of the vehicle seat cushion and seat back. The upper tether anchorage is a ring-like object to which the upper tether of a child restraint system can be attached. FMVSS No. 213 requires CRSs to be equipped with attachments that enable the CRS to attach to the vehicle's child restraint anchorage system.

The standard adopted by this final rule applies to child restraints for children weighing up to 18.1 kg (40 lb) or for children up to 1100 millimeters (mm) (43.3 inches, or 3 feet, 7 inches) in standing height.[9] These children would be virtually all 3-year-olds and almost all 4-year-olds. The 18.1 kg (40 lb) threshold is greater than the weight of a 97th percentile 3-year-old (17.7 kg (39.3 lb)) and is approximately the weight of an 85th percentile 4-year-old. The 1100 mm (43.3 inches) height threshold is more than the height of a 97th percentile 3-year-old (1024 mm (40.3 inches)) and corresponds to the height of a 97th percentile 4-year-old. While the standard would apply to child restraints that are recommended for use by children weighing less than 18.1 kg (40 lb) or with heights under 1100 mm (43.3 inches), as explained in a later section, the countermeasures (padding and side structure) designed into a safety seat to meet the standard may also provide side impact protection even as the child surpasses the 18.1 kg (40 lb) or 1100 mm (43.3 inches) mark. Many child safety seats are recommended for children much heavier than 18.1 kg (40 lb) or taller than 1100 mm (43.3 inches). Children kept in such seats will benefit from the countermeasures as they grow heavier than 18.1 kg (40 lb) or taller than 1100 mm (43.3 inches). NHTSA quantified the benefits of this rule for children up to age 4 but believes that children older than age 4 would benefit from this final rule as well.

This final rule adopts a dynamic sled test simulating a full-scale vehicle-to-vehicle side impact, which is the first-of-its-kind simulating both an intruding door and a longitudinal crash component. Child restraints recommended[10] for children weighing 13.6 to 18.1 kg (30 to 40 lb) are tested with an instrumented side impact test dummy representing a 3-year-old child, called

---

[9] The agency added a height provision to make the new standard's applicability clear to booster seat manufacturers who choose not to label their restraints with a weight recommendation. Although all current belt-positioning boosters are labeled with both height and weight recommendations, FMVSS No. 213 permits manufacturers of belt-positioning booster seats to delete the reference to maximum weight (see FMVSS No. 213, S5.5.2(f)). In view of that provision, for manufacturers that only provide a height limit, the application section of FMVSS No. 213a will be clear as to the applicability of the standard to their restraints. When this final rule preamble refers to a "40 lb weight limit" we mean the term to be synonymous with a height limit of 1100 mm for belt-positioning boosters that only provide a height limit.

[10] When we describe a child restraint as "recommended for" children of a certain height or weight range, we mean the child restraint manufacturer is manufacturing for sale, selling or offering the CRS for sale as suitable for children in that height or weight range.

the Q3s dummy.[11] Child restraints designed for children weighing up to 13.6 kg (30 lb) are tested with an established 12-month-old child test dummy (the 12-month-old Child Restraint Air Bag Interaction (CRABI) dummy).[12] The new standard requires CRSs to restrain the dummy in the side test, manage side crash forces and prevent harmful head contact with side structures. Child restraints tested with the Q3s must also limit crash forces to the dummy's chest. Following the dynamic side impact test, child restraints will be assessed for their compliance with requirements for system integrity, contactable surfaces, and buckle release, just like they are following Standard No. 213's frontal impact test.

Work Preceding this Final Rule

NHTSA published the notice of proposed rulemaking (NPRM) preceding this final rule on January 28, 2014 (79 FR 4570).[13] Enhanced side impact protection for children has long been a priority for NHTSA. NHTSA laid the necessary groundwork for this final rule over the years preceding and since the NPRM.[14]

To develop the NPRM, NHTSA examined data on the fatalities of young children to see how children are killed and injured in side crashes, the characteristics of the crashes that are injuring them, and the types of injuries they suffer. Among CRS-restrained children killed in side crashes, about 60 percent were in near-side impacts,[15] leading NHTSA to focus development on a near-side sled test. Intrusion was found to be an important causative factor for moderate to serious injury, which led NHTSA to concentrate on developing a side impact test procedure that included intrusion into the occupant space.[16] Data indicated that children restrained in child restraints exhibited more head injuries (59 percent) compared to torso injuries

---

[11] The Q3s is NHTSA's first child test dummy designed for side impacts. NHTSA published a final rule on November 3, 2020 that adopted the Q3s into NHTSA's regulation for anthropomorphic test devices. 85 FR 69898.
[12] 49 CFR part 572, subpart R.
[13] Docket No. NHTSA 2014-0012.
[14] An overview of NHTSA's work developing FMVSS No. 213a can be found in section IX of the January 28, 2014 NPRM, 79 FR at 4579-4590.
[15] See NPRM for this final rule, 79 FR 4570, Table 6. The NPRM also noted that among CRS-restrained children with moderate to higher severity injuries in side crashes, over 60 percent were in near-side impacts (Table 8).
[16] Sherwood, *see* footnotes 40, 43 and 44 of the NPRM.

(22 percent) and injuries to extremities (14 percent). NHTSA used these and other data to develop the first-of-its-kind safety standard on child side impact protection involving a near-side impact with a longitudinal crash component and an intruding vehicle door.

Following publication of the NPRM, NHTSA conducted a multi-year research program from 2014 to 2016 to broaden the assessment of the Q3s in providing repeatable and reproducible test results in side impact testing. NHTSA designed a test program involving Humanetics Innovative Solutions, Inc. (a dummy manufacturer), several private dummy owners (CRS manufacturers), two independent testing labs, and NHTSA's Vehicle Research and Test Center (VRTC). This work validated the performance specifications of the NPRM, thus better ensuring that all future Q3s dummies will be uniform, and provided information for NHTSA to use in prescribing specifications for the Q3s. Information from that program refined the set of engineering drawings and the series of dummy-only impact tests used for production and qualification of the Q3s.[17] The test program enabled NHTSA to produce a set of fully-vetted engineering specifications and an objective set of qualification standards. These materials guarantee a high level of uniformity in any conforming Q3s unit used to assess CRS performance in a side impact test.

Through research from 2015 to 2017, NHTSA adjusted the side impact sled test assembly to reduce variability in results and more closely align the assembly with current vehicle seats. In 2017, NHTSA undertook fleet testing to obtain current data of CRS performance in side impacts using the refined side impact seat assembly. These research projects are discussed in detail in sections below in this preamble.

FMVSS No. 214 and No. 226

FMVSS No. 214 played a critical role in developing this final rule. NHTSA designed the side impact test to replicate the FMVSS No. 214 moving deformable barrier (MDB) test, as the

[17] The drawings describe every part on the dummy and may be used to inspect dummies purchased from a dummy manufacturer. The impact tests used by CRS manufacturers and other end-users serve as a final check to ensure that the assembled dummy will perform as prescribed by NHTSA in 49 CFR part 572.

MDB test simulates a full-scale severe intersection collision of an impacting vehicle (represented by a 1,360 kg (3,000 lb) MDB) traveling at 48.3 km/h (30 mph) striking the side of a test vehicle traveling at 24 km/h (15 mph).[18] The MDB test replicated in this final rule involves a change of velocity of approximately 30.5 km/h (19 mph). NHTSA's analysis of field data (NASS-CDS 1995-2009) found that 92 percent of near-side crashes for restrained children (0 to 12 years-old) involved a change in velocity of 30.5 km/h (19 mph) or lower.

NHTSA designed this rule to account for the safety countermeasures installed in vehicles to meet FMVSS No. 214 as practicably possible, to make a realistic assessment of how a CRS will perform when subjected to a side crash in the real world. To achieve this, NHTSA used compliance test data from MDB tests where the vehicle passed the FMVSS No. 214 test, to replicate the characteristics of passenger-carrying vehicles on the road. Furthermore, NHTSA designed FMVSS No. 213a to replicate a collision of the striking MDB with a small vehicle rather than a larger vehicle. NHTSA sought to replicate the characteristics of a small passenger car, as opposed to a larger vehicle, because smaller cars generally present a more demanding side impact test condition than larger vehicles, since smaller cars generally have a higher change in velocity than larger ones when impacted by the same MDB. Testing child restraints under the more severe condition better ensures they will provide the threshold level of protection required by the standard in both small cars and large cars than if they were assessed under conditions replicating large cars alone.

Standard No. 214's pole test and FMVSS No. 226, *Ejection mitigation,*[19] were also integral to development of this final rule. To meet the pole test, manufacturers equip passenger vehicles with side air bags in front seating positions to protect against unreasonable risk of head and chest injuries. To meet the pole test and FMVSS No. 226 requirements, manufacturers

---

[18] FMVSS No. 214 MDB test (49 CFR 571.214, S7).

[19] FMVSS No. 214, S9. The pole test protects against side crashes of passenger vehicles into structures such as telephone poles and trees. It is a near-side impact. NHTSA established FMVSS No. 226 (49 CFR 571. 226) in 2011 (76 FR 3212). The standard was phased in starting in 2013, with full compliance required for vehicles manufactured on or after September 1, 2017.

install side curtain air bags[20] to deploy in both side impacts and in rollovers, and design them to cover all side windows at the vehicle's front, second and third rows, from the roof line to the window sill. Consequently, vehicles are currently produced with side curtain air bags that cover the entire side window for front and rear row seats in both side impacts and rollovers. NHTSA developed FMVSS No. 213a recognizing that these side curtain air bags can protect passengers in rear seating positions against unreasonable risk of head injury in side impact crashes, including older children in booster seats.

Details of This Final Rule

The side impact sled test adopted by this final rule tests child restraints in a manner that simulates the vehicle acceleration and intruding door in a realistic side impact.[21] The test seat assembly on which a CRS is tested replicates the rear seating position nearest to the side impact (near-side impact), as data show near-side impacts are more injurious than far-side impacts, accounting for 81 percent of moderate-to-critical injuries to restrained 0- to 3-year-old children involved in side crashes. Most of these moderate-to-critical injuries in near-side impacts are due to impact with interior surfaces in the vehicle, and in near-side impacts, the interior surface is usually the intruding door.[22] In far-side impacts, the impact surfaces vary considerably depending on the crash dynamics, and therefore are difficult to characterize. For these reasons, standards established worldwide for side impact protection of children focus on near-side impacts, and FMVSS No. 214's moving deformable barrier and pole tests involve only near-side impacts.

---

[20] In the final rule adopting the pole test into FMVSS No. 214, NHTSA anticipated that side curtain air bags installed to meet FMVSS No. 214 would also be the countermeasure to meet the then-pending ejection mitigation standard. NHTSA anticipated side impact curtain air bags would extend to rear seating positions, and that occupants in rear seating positions would benefit from the side curtain air bags in side impacts. NHTSA stated: "We believe that manufacturers will install curtains in increasing numbers of vehicles in response to this [FMVSS No. 214] final rule, the voluntary commitment, and in anticipation of NHTSA's ejection mitigation rulemaking. The curtains will provide head protection to front and rear seat occupants in side impacts." 72 FR 51911, 51933; Sept. 11, 2007.

[21] Data show that door intrusion is a causative factor for moderate and serious injury to children in side impacts. Arbogast, *supra*.

[22] Arbogast, et al., "Injury Risks for Children in Child Restraint Systems in Side Impact Crashes" (2004); Arbogast, et al., "Protection of Children Restrained in Child Safety Seats in Side Impact Crashes" (2010); McCray et al., "Injuries to Children One to Three Years Old in Side Impact Crashes" (2007).

This final rule applies to CRSs designed to seat children weighing up to 18.1 kg (40 lb). NHTSA did not specify a limit above 18.1 kg (40 lb) because there is no side impact dummy representative of children weighing more than 18.1 kg (40 lb) that is proven to provide the reliable test measurements required of a test instrument used in the FMVSSs.[23] NHTSA is concerned that, without a valid test dummy, CRSs for heavier children may "pass" a side impact test with a smaller dummy but the dummy would not meaningfully assess the performance of the CRS in protecting a larger child. Raising the limit above 18.1 kg (40 lb) could engender a false sense of security that the CRS adequately protects the heavier (larger) children when, in fact, the assessment of performance was meaningless.

NHTSA also decided to adopt a 40-lb weight limit after considering the overall side impact protection provided by the FMVSSs and the ongoing and potential work on child restraint safety. As explained above, FMVSS No. 214's side impact tests were highly important to NHTSA's design of FMVSS No. 213a and implementation of MAP-21. Children over 40 lb would be provided side impact protection by remaining in a CRS meeting FMVSS No. 213a for as long as the manufacturer recommends, which typically exceeds a weight above 40 lb.[24] When children outgrow their safety seats, they transition to a booster seat, which on average raises a seated child by 82 mm (3.22 inches),[25] which would position the child high enough to benefit from the vehicle's side curtain air bags installed to meet Standards Nos. 214 and 226.

---

[23] As noted earlier, the final rule applies to CRSs designed for children weighing up to 18.1 kg (40 lb) and with standing height up to 1100 mm (43.3 inches), which covers more than 97 percent of 3-year-old children and about 85 percent of 4-year-old children. The Q3s child dummy has weight and height representative of an average 3-year-old child.

[24] Out of the 107 models of forward-facing CRSs with internal harness (convertibles, combination and all-in-one CRSs) in the market, 85.9% have a maximum weight recommendation of 65 pounds, 10.2% have a maximum weight recommendation of 40 pounds and only 3.7% have a 50 pound maximum weight recommendation.

[25] The agency determined the height that a booster seat raises a seated child (boosting height) by measuring the difference in the H-point (marker on the hip) of the HIII-6-year-old dummy when the dummy is seated on the side impact seat assembly specified in this final rule (SISA) with no booster seat and when the dummy is seated on the SISA in a booster seat. The boosting height measured for 15 booster seat models ranged from 43 mm (1.69 inches) to 104 mm (4.09 inches) with an average boosting height of 83 mm (3.26 inches). A document with the measurements is docketed with this final rule.

On November 2, 2020, NHTSA proposed to update FMVSS No. 213's frontal impact test requirements, including the seat assembly and other changes to the standard.[26] In that NPRM, NHTSA proposed that booster seats must be labeled as suitable only for children weighing more than 18.1 kg (40 lb).[27] This final rule is consistent with that proposal to ensure that children remain in car seats providing side impact protection longer, and will transition to booster seats only when they are large enough to take advantage of the vehicle's side air bag countermeasures.

Estimated Benefits and Costs

NHTSA estimates that this final rule will reduce 3.7 fatalities and 41 (40.9) non-fatal injuries (MAIS[28] 1-5) annually (see Table 1 below).[29] The equivalent lives and the monetized benefits were estimated in accordance with guidance issued in March 2021 by the Office of the Secretary[30] regarding the treatment of value of a statistical life in regulatory analyses. This final rule is estimated to save 15.1 equivalent lives annually. The monetized annual benefits of this final rule at 3 and 7 percent discount rates are $169.0 million and $152.2 million, respectively (Table 2). NHTSA estimates that the annual cost of this final rule is approximately $7.37 million. The countermeasures may include larger wings and padding with energy absorption

---

[26] 85 FR 69388, November 2, 2020, Docket NHTSA-2020-0093. Section 31501(b) of MAP-21 Subtitle E, directed NHTSA to undertake rulemaking to amend the standard seat assembly in FMVSS No. 213 "to better simulate a single representative motor vehicle rear seat." Among other matters, as part of updating the standard seat assembly, the NPRM proposed replacing the lap belt currently on the test assembly with a lap and shoulder belt. MAP-21 requires NHTSA to issue a final rule adopting an updated seat assembly.

[27] 85 FR at 69427, col. 3. NHTSA currently recommends that children riding forward-facing should be restrained in CRSs with internal harnesses (car safety seats) as long as possible before transitioning to a booster seat. https://www.nhtsa.gov/equipment/car-seats-and-booster-seats#age-size-rec. FMVSS No. 213 currently permits booster seats only to be recommended for children weighing at least 13.6 kg (30 lb) (S5.5.2(f)). Based on an analysis of field data and other considerations, NHTSA believes the 13.6 kg (30 lb) value should be raised. Thirty pounds corresponds to the weight of a 50th percentile 3-year-old, and to the weight of a 95th percentile 18-month-old; *i.e.,* children too small to be safely protected in a booster seat. In the November 2, 2020 NPRM, NHTSA proposed to amend S5.5.2(f) to raise the 13.6 kg (30 lb) limit to 18.2 kg (40 lb), which is greater than the weight of a 97th percentile 3-year-old (17.7 kg (39.3 lb)) and approximately the weight of an 85th percentile 4-year-old.

[28] MAIS (Maximum Abbreviated Injury Scale) represents the maximum injury severity of an occupant based on the Abbreviated Injury Scale (AIS). AIS ranks individual injuries by body region on a scale of 1 to 6: 1=minor, 2=moderate, 3=serious, 4=severe, 5=critical, and 6=maximum (untreatable). MAIS 3+ injuries represent MAIS injuries at an AIS level of 3, 4, 5, or 6.

[29] NHTSA has developed a Final Regulatory Impact Analysis (FRIA) that discusses issues relating to the potential costs, benefits, and other impacts of this regulatory action. The FRIA is available in the docket for this final rule and may be obtained by downloading it or by contacting Docket Management at the address or telephone number provided at the beginning of this document.

[30] https://www.transportation.gov/office-policy/transportation-policy/revised-departmental-guidance-on-valuation-of-a-statistical-life-in-economic-analysis

characteristics that cost, on average, approximately $0.58 per CRS designed for children in a weight range that includes weights up to 40 lb (both forward-facing and rear-facing) (Table 3 below). The annual net benefits are estimated to be $144.8 million (7 percent discount rate) to $161.6 million (3 percent discount rate) as shown in Table 4. Because this final rule is cost beneficial just by comparing costs to monetized economic benefits, and there is a net benefit, NHTSA has not provided a net cost per equivalent life saved as there is no additional value provided by such an estimate.

Table 1: Annual Estimated Benefits

Fatalities	3.7
Non-fatal injuries (MAIS 1 to 5)	41 (40.9)

Table 2: Estimated Monetized Benefits
In Millions of 2020 Dollars

	Economic Benefits	Value of Statistical Life	Total Benefits
3 Percent Discount Rate	$26.24	$142.72	$168.97
7 Percent Discount Rate	$23.63	$128.53	$152.16

Table 3: Estimated Costs (2020 Economics)

Average cost per CRS designed for children in a weight range that includes weights up to 40 lb	$0.58
Total annual cost	$7.37 million

Table 4: Annualized Costs and Benefits
In millions of 2020 Dollars

	Annualized Costs	Annualized Benefits	Net Benefits
3% Discount Rate	$7.37	$168.97	$161.60
7% Discount Rate	$7.37	$152.16	$144.79

How This Final Rule Differs From the NPRM

For the convenience of the reader, the notable changes from the NPRM are described below. They are explained in detail in relevant sections throughout this preamble. More minor

changes (e.g., positioning the arm of the Q3s) are not highlighted below but are discussed in the sections of this preamble relating to the topic.

- The side impact seat assembly (SISA) specified in this final rule is slightly different from the proposed SISA in four ways: aspects of the representative vehicle seat cushion (characteristics of the seat foam), the height of the seat back, location of the child restraint anchorages and seat belts, and vertical position of the door and armrest. These changes were made to make it easier to source foam, and to reflect real-world vehicle seats more accurately. The changes align with the November 2, 2020 NPRM that proposes to update FMVSS No. 213's frontal impact test seat assembly.[31] Stiffening structures were also added to the sliding seat to minimize vibrations in compliance testing.
- The tolerance in the relative velocity (V_0) between the sliding seat and the door assembly at time of initial contact (T_0) is reduced in the final rule from the proposed 31.3 ± 0.8 km/h to 31.3 ± 0.64 km/h to improve repeatability and reproducibility of the test.
- The NPRM proposed that the test platform velocity during the time of interaction of the door with the CRS would be no greater than V_0 and not less than $V_0 - 1$ km/h. This final rule specifies the test platform velocity as no lower than 2.5 km/h less than its velocity at time = T_0. This change provides more flexibility to different test facilities to meet the test specifications while maintaining satisfactory test repeatability and reproducibility.
- This final rule includes specifications for a relative door velocity corridor (the velocity of the simulated door assembly relative to the sliding seat) to improve the repeatability and reproducibility of the test procedure. NHTSA requested comment in the NPRM on the merits of a corridor and decided, after reviewing the comments, that a corridor increases the repeatability and reproducibility of the test when different types of sled systems[32] are used.

---

[31] 85 FR 69388, *supra*.

[32] There are acceleration and deceleration type sled systems. An acceleration sled is accelerated from rest to a prescribed acceleration profile to simulate the occupant compartment deceleration in a crash event. In comparison, a deceleration sled is first accelerated to a target velocity and then is decelerated to a prescribed deceleration profile to simulate the same event.

- NHTSA tentatively believed in the NPRM that CRS performance would not be affected if a CRS were attached to the SISA by a seat belt or by the child restraint anchorage system, assuming that a seat belt would be routed through a belt path near to where the anchorage attachment points are located. NHTSA thus proposed to test child restraints by attaching them only by the child restraint anchorage system, and requested comment on the issue. Several commenters supported testing with the seat belt attachment in addition to the child restraint anchorage system attachment. After considering the comments, and after observing that some newer child restraint designs have belt paths no longer near the CRS's anchorage attachment points, NHTSA has included a test configuration using a Type 2 seat belt (lap and shoulder belt) with the CRS's top tether attached, if provided.
- The NPRM proposed using the 12-month-old CRABI dummy to test child restraints recommended for children weighing 5 to 10 kg (11 to 22 lb) and the Q3s dummy (representative of a 3-year-old child) to test child restraints for children weighing 10 to 18.1 kg (22 to 40 lb). After reviewing comments on this issue, NHTSA has decided to raise the 10 kg (22 lb) dividing line to 13.6 kg (30 lb) so that infant carriers would not be subject to testing with the Q3s 3-year-old dummy.[33] Testing with the Q3s does not make sense as the dummy is too large to fit an infant carrier and is not representative of the children for whom the restraint is recommended. Testing infant carriers with only the CRABI 12-month-old dummy better aligns the standard's test requirements with real world use of the restraints.[34]

II. Safety Need

[33] An infant carrier is a rear-facing CRS designed to be easily used inside and outside of the vehicle. They typically are sold for use by children in a weight range from newborn to 18.5 kg (40 lb). An infant carrier is designed to be easily removed from the vehicle and has a carrying handle that allows caregivers to tote the infant outside of the vehicle without having to remove the child from the restraint system. Some come with a base that stays inside the vehicle, enabling a simple means of reattaching the carrier when it is used as a CRS. This change is consistent with the November 2, 2020 NPRM on FMVSS No. 213's frontal crash test requirements.

[34] This statement assumes the carriers are not designed to accommodate child weights over 13.6 kg (30 lb).

The motor vehicle occupant fatality rate among children 3-years-old[35] and younger has declined from 4.5 in 1975 to 1.1 in 2019 (per 100,000 occupants). This decline in fatality rate is partially attributed to the increased use of child restraint systems. The 2019 National Survey of the Use of Booster Seats (NSUBS) found that restraint use in the rear row (excluding third or further rows) was 98 percent for children less than 1-year-old, 95 percent for 1- to 3-year-old, and 88 percent for 4- to 7-year-old.[36]

According to the 2019 FARS data files, there were 36,096 persons killed in motor vehicle crashes in 2019, 177 of whom were children aged 3 and younger killed in passenger vehicle crashes. Among the 177 child occupant fatalities, 44 (25 percent) were unrestrained, 7 (4 percent) were restrained by vehicle seat belts, 111 (63 percent) were restrained in CRSs, and 13 (7 percent) had unknown restraint use.[37]

In 1996, the agency estimated the effectiveness of CRSs and found the devices to reduce fatalities by 71 percent for children younger than 1-year-old and by 54 percent for toddlers 1- to 4-years-old in passenger vehicles.[38] For this rulemaking, the agency updated the 1996 effectiveness estimates by conducting a similar analysis using the FARS data files for the years 1995-2009.[39] In the updated analysis,[40] only non-rollover frontal and side crashes of passenger cars and LTVs were considered. CRS effectiveness was estimated for each crash mode. Due to small sample size of unrestrained children less than 1-year-old, the 0- to 1-year-old age group was combined with the 1- to 3-year-old age group for determining CRS effectiveness for each crash mode. The results indicate that in non-rollover frontal crashes, CRSs currently in use are 53 percent effective in preventing fatalities among children 0- to 3-years-old and 43 percent

---

[35] As used in this document, "children 3-years-old and younger" includes children up to the day before they turn 4-years-old.
[36] Enriquez, J. (2021, May). The 2019 National Survey of the Use of Booster Seats (Report No. DOT HS 813 033). National Highway Traffic Safety Administration. https://crashstats.nhtsa.dot.gov/Api/Public/ViewPublication/813033
[37] Children, Traffic Safety Facts – 2009 data, DOT HS 811 387, NHTSA, https://crashstats.nhtsa.dot.gov/Api/Public/ViewPublication/811387.
[38] "Revised Estimates of Child Restraint Effectiveness," Research Note, *supra*.
[39] Details of the analysis method are provided in the supporting technical document in the docket for the NPRM.
[40] Details of the updated analysis are provided in the supporting technical document in the docket for the NPRM.

effective among children 4- to 7-years-old. In non-rollover side crashes, CRSs currently in use are 42 percent effective in preventing fatalities among 0- to 3-year-old children and 51 percent effective among 4- to 7-year-old children.

NHTSA estimates that the lives of 325 children 3-years-old and younger were saved in 2017 due to the use of child restraint systems.[41]

Failure to use proper occupant restraints is a significant factor in a large number of child occupant fatalities resulting from motor vehicle crashes. In addition, fatalities among children properly restrained in child restraints are often attributed to the severity of the crash. Sherwood[42] examined the FARS database for the year 2000 and determined that there were 621 child occupant fatalities in the age range of 0 to 5 years. Among these 621 fatalities, 143 (23 percent) children were reported to be in child restraints. Detailed police reports were available for 92 of the 143 fatally injured children restrained in CRSs. Sherwood examined these 92 police reports and determined that half of the 92 fatalities were in un-survivable crashes, 12 percent of the fatalities were judged to result from gross misuse of child restraints, 16 percent in non-catastrophic side impacts, and 13 percent in non-catastrophic frontal impacts. Sherwood noted that side impacts accounted for the largest number of fatalities (40 percent), and in all side impact crashes involving child fatalities, there was vehicle intrusion at the child's seating position.

In-depth Study of Fatalities Among Child Occupants

---

[41] National Center for Statistics and Analysis (2019, March). *Lives saved in 2017 by restraint use and minimum-drinking-age laws* (Traffic Safety Facts Crash·Stats. Report No. DOT HS 812 683). Washington, DC: National Highway Traffic Safety Administration. Available at: https://crashstats.nhtsa.dot.gov/Api/Public/ViewPublication/8126834

[42] Sherwood, C. P., Ferguson, S. A., Crandall, J. R., "Factors Leading to Crash Fatalities to Children in Child Restraints," 47th Annual Proceedings of the Association for the Advancement of Automotive Medicine (AAAM), September 2003.

The agency further examined the real-world crash databases managed by the agency (FARS (2015-2019) and the National Automotive Sampling System-Crashworthiness Data System (NASS-CDS) 2001-2015) to better understand fatalities to children restrained in child restraints when involved in side crashes.

First, NHTSA categorized the crash cases involving children (0- to 12-years-old) seated in rear seating positions, by restraint use, crash type, and child age. See Tables 5 and 6, below.

Table 5 - Average annual crash fatalities among children 0- to 12-years-old in rear seating positions of light passenger vehicles categorized by restraint type and age (FARS 2015-2019)

Restraint	Age (years)				Total
	Under 1	1-3	4-7	8-12	
None	7.2	24.6	50.6	67.0	149.4
Adult Belt	0.8	8.2	36.8	77.0	122.8
CRS	40.6	96.6	69.2	6.4	212.8
Unknown	3.2	9.4	15.0	12.4	40.0
Other	0.0	0.2	0.6	0.4	1.2
Total	51.8	139.0	172.2	163.2	526.2

Annually on average between 2015 and 2019, there were 526 crash fatalities among children 0- to 12-years-old seated in rear seating positions of light vehicles. Among these fatalities, on average 213 (40 percent) were children restrained in CRSs (137 were 0- to 3-years-old and 76 were 4- to 12-years-old). Nearly 64 percent of the CRS restrained child fatalities were children 0- to 3-years-old.

As shown in the last column of Table 6, among the 213 fatalities of children 0- to 12-years-old restrained in rear seats of light passenger vehicles and in CRSs, approximately 31 percent occurred in frontal crashes, 25 percent in side crashes, 22 percent in rollovers, and 19 percent in rear crashes. Approximately 55 percent of side impact fatalities (28.8/52.2) were in near-side impacts. ("Far-side" position means the outboard seating position on the opposite side of the point of impact or the center seating position.)

Table 6 - Average annual crash fatalities among children 0- to 12-years-old in rear seating positions of light passenger vehicles and restrained in CRSs by crash mode and age (FARS 2015-2019)[43]

Crash Mode	Age (years)				Total	Percent Total
	<1	1-3	4-7	8-12		
Rollover	8.0	21.8	15.4	1.6	46.8	22.0
Front	13.6	30.8	21.4	0.8	66.6	31.3
Side	10.2	23.4	16.2	2.4	52.2	24.5
Near-side	6.2	11.6	9.2	1.8	28.8	13.5
Far-side	3.8	11.4	6.8	0.6	22.6	10.6
Unknown-side	0.2	0.4	0.2	0.0	0.8	0.4
Rear	7.8	17.0	14.0	1.6	40.4	19.0
Other	0.4	2.0	1.0	0.0	3.4	1.6
Unknown	0.6	1.6	1.2	0.0	3.4	1.6
Total	40.6	96.6	69.2	6.4	212.8	100.0

Of the side impact crash fatalities among CRS restrained children 0- to 12-years-old in rear seating positions, nearly 62 percent of near side fatalities ((6.2+11.6)/28.8) were to children under the age of 4.

In-depth Study of Injuries to Child Occupants in Motor Vehicle Crashes

In 2010, the agency published an analysis of the NASS - General Estimates System (GES) data for the years 1999-2008 to better understand injuries to children in motor vehicle traffic crashes.[44] The analysis was conducted for three different child age groups (<1-year-old, 1- to 3-years-old, and 4- to 7-years-old) and for different crash modes (rollover, front, side, and rear). The analysis indicated that CRSs are effective in reducing incapacitating injuries in all three child age groups examined and in all four crash modes. The analysis found that rollover crashes accounted for the highest rate of incapacitating injuries, with the incidence rate among unrestrained children (26 percent) being nearly 3 times that for children restrained in CRSs (9

[43] The 2005-2009 FARS analysis presented in the NPRM, showed 31 percent fatalities of children 0- to 12-years-old restrained in rear seats of light passenger vehicles and in CRSs were in side impact. The 2015-2019 FARS analysis shows only 24.5 percent of fatalities in side impacts, however, the difference in the figures are attributed to the changing available variables in FARS not a decrease in side impact fatalities. The 2005-2009 FARS analysis was done using "IMPACT2 (most damaged area)" while the 2015-2019 was done using "IMPACT1 (area of initial contact), as IMPACT2 was retired.

[44] Hanna, R., "Children Injured in Motor Vehicle Traffic Crashes," DOT HS 811 325, NHTSA, May 2010, http://www-nrd.nhtsa.dot.gov/Pubs/811325.pdf, last accessed on July 2, 2012.

percent). In near-side impact crashes, unrestrained children (incidence rate = 8 percent) were 8 times more likely to sustain incapacitating injuries than children in CRSs (incidence rate = 1 percent).

The agency analyzed NASS-CDS for the years 2001-2015 to obtain annual estimates of moderate or higher severity injuries (MAIS 2+ injuries) among children of different ages in different restraint environment and crash modes. See Table 7 and 8.

Table 7 - Average annual estimates of 0- to 12-years-old children with MAIS 2+ injuries in rear seating positions of light passenger vehicles involved in motor vehicle crashes by restraint type (NASS-CDS 2001-2015)

Restraint	Age (years)					
	Under 1	1-3	4-7	8-12	Total	Percent of Total
None	15	94	530	575	1,214	20.0
Adult Belt	0	91	489	860	1,440	23.8
CRS	181	731	504	36	1,452	24.0
Unknown if Used	1	28	323	146	498	8.2
Total	378	1,675	2,350	1,653	6,056	100.0

Between 2001 and 2015 on average annually there were an estimated 6,056 twelve and younger children with MAIS 2+ injuries seated in the rear seats of light passenger vehicles with 2,053 of these injured occupants being younger than 4- years-old. Approximately 1,452 CRS restrained children 12-years-old and younger sustained MAIS 2+injuries, among which 912 (63 percent) were children younger than 4-years-old and 504 (35 percent) were 4- to 7-year-old children.

The NASS-CDS 2001-2015 data files were further analyzed to determine crash characteristics. Table 8 presents the average annual estimates of 0- to 12-year-old children with MAIS 2+ injuries in rear seating positions of light passenger vehicles. Approximately 38 percent of the children were injured in frontal crashes, 32 percent in side crashes, 24 percent in rollover crashes and 5 percent in rear crashes.

Table 8 - Average annual estimates of 0- to 12-years-old children with MAIS 2+ injuries in rear seating positions of light passenger vehicles involved in motor vehicle crashes by crash mode (NASS-CDS 2001-2015)

Crash Mode	Age (years)				Total	Percent of Total
	<1	1-3	4-7	8-12		
Rollover	13	150	396	543	1,102	23.9
Front	62	329	710	658	1,759	38.2
Side	46	373	691	387	1,497	32.5
Near-Side	31	276	330	260	897	19.5
Far-Side	11	58	360	126	555	12.1
Unknown-Side	4	39	1	1	45	1.0
Rear	78	76	49	29	232	5.0
Other	0	14	0	0	14	0.3
Total	199	942	1,846	1,617	4,604	100.0

To better understand the crash characteristics of children restrained in child restraints, a similar analysis as that shown in Table 8 was conducted except that only the cases where the children were restrained in CRSs were included in the analysis. The results are presented in Table 9.

Table 9 - Average annual estimates of 0- to 12-years-old CRS restrained children with MAIS 2+ injuries in rear seating positions of light passenger vehicles involved in motor vehicle crashes by crash mode (NASS-CDS 2001-2015)

Crash Mode	Age (years)				Total	Percent of Total
	Under 1	1-3	4-7	8-12		
Rollover	12	60	102	0	174	12.0
Front	55	293	233	18	599	41.2
Side	42	323	139	18	522	35.9
Near-side	31	272	44	18	336	25.1
Far-side	11	51	95	0	157	10.8
Rear	74	54	31	0	159	10.29
Total	183	730	505	36	1,454	100.0

For MAIS 2+ injured 12-years-old and younger child occupants in passenger vehicles restrained in CRSs in rear seating positions, 41 percent of the injuries were in frontal crashes, 36 percent in side crashes, 12 percent in rollovers, and 10 percent in rear crashes. About 64 percent (336/522) of the occupants in side crashes were in near-side impacts.

In the above analyses, some of these injuries and fatalities involved children in seats that were incorrectly used. However, NHTSA does not have complete data on the number accidents that involved misuse because accident databases do not generally collect data on how child restraints were used.

III. Statutory Mandate

Subtitle E of the "Moving Ahead for Progress in the 21st Century Act" (MAP-21), P.L. 112-141 (July 6, 2012),[45] included Section 31501(a), which stated that, not later than two years after the date of enactment of the Act, the Secretary (NHTSA by delegation) shall issue a final rule amending Federal Motor Vehicle Safety Standard No. 213 to improve the protection of children seated in child restraint systems during side impact crashes.

This final rule accords with MAP-21 and implements Congress's intent to implement a side impact standard for child restraints. In 2004, NHTSA informed Congress[46] that, while enhanced side impact protection for children in child restraints was a priority for NHTSA, NHTSA had initiated a side impact rulemaking in response to the Transportation Recall Enhancement, Accountability and Documentation (TREAD) Act but found the extent of the uncertainties prevented adoption of a side impact performance test for CRSs.[47] NHTSA informed Congress when the agency withdrew the rulemaking that NHTSA would continue its efforts to obtain detailed side crash data identifying specific injury mechanisms involving children and would work toward developing countermeasures using test dummies, including the European Q3 dummy then available, for improved side impact protection.

In March 2011, NHTSA's Vehicle Safety and Fuel Economy Rulemaking and Research Priority Plan 2011-2013, announced the agency's intention to issue an NPRM in 2012 on child restraint side impact protection.[48] NHTSA stated in the plan that it was planning to "[p]ropose

---

[45] Subtitle E is entitled "Child Safety Standards."
[46] NHTSA Report to Congress, "Child Restraint Systems, Transportation Recall Enhancement, Accountability, and Documentation Act," February 2004. www.nhtsa.gov/nhtsa/announce/NHTSAReports/TREAD.pdf
[47] Advance Notice of Proposed Rulemaking, 67 FR 21836, May 1, 2002.
[48] Docket No. NHTSA-2009-0108-0032.

test procedures in FMVSS No. 213 to assess child restraint performance in near-side impacts. Amend Part 572 to add the Q3s dummy, the 3-year-old side impact version of the Q-series of child dummies."

MAP-21 was enacted soon thereafter, with a short deadline for issuance of a final rule. Given the context of NHTSA's work in this area, NHTSA has interpreted Subtitle E as directing NHTSA to apply the knowledge gained since its 2004 report to Congress to initiate and complete the side impact regulation as the agency had planned. There were no child test dummies other than the Q3s available when MAP-21 was enacted that were proven sufficiently durable and reliable for use in the FMVSS No. 213 side impact test.[49] There was not enough time to develop and validate a different test procedure, or new child side impact test dummies, within the time constraints of Subtitle E.

MAP-21 required a final rule "amending FMVSS No. 213," which NHTSA has interpreted to mean that the rulemaking must be conducted in accordance with the National Traffic and Motor Vehicle Safety Act (49 U.S.C. 30101 *et seq*.) (Safety Act). NHTSA has developed a standard that will improve the protection of children seated in child restraint systems during side impacts, in accordance with MAP-21, while meeting the criteria of Section 30111 of the Safety Act. Standard No. 213a meets the need for safety, is stated in objective terms, and is reasonable, practicable, and appropriate for the CRSs for which it is prescribed. There are technical and practical reasons for applying the dynamic side impact test only to CRSs designed to seat children in a weight range that includes weights up to 18.1 kg (40 lb).

For one, there is no side impact dummy representative of children weighing more than 40 lb that is proven to provide the test measurements required of a dummy used in the Federal motor vehicle safety standards. Without an appropriate test dummy, the data from a dynamic test would not provide a meaningful assessment of the performance of the CRS in protecting children of weights above 18.1 kg (40 lb). Without a valid test dummy, CRSs for heavier

[49] There are still no child test dummies that are suitable for use in a side impact FMVSS other than the Q3s.

children may "pass" a side impact test with the Q3s, but the Q3s would not meaningfully assess the performance of the CRS in protecting the heavier child. Raising the limit above 40 lb could engender a false sense of security that a restraint adequately protects the heavier children when, in fact, without a heavier test dummy, the standard would not be adequately assessing the restraint's protection of these children. NHTSA believes Congress was aware of this limitation on the availability of test dummies when it enacted MAP-21, and did not want NHTSA to apply the new standard to a subset of CRSs that could not be sufficiently assessed for their performance in protecting a child in a side impact. Moreover, it does not seem sensible to require manufacturers to ensure their CRSs comply with the standard tested with the Q3s if the child restraints are not intended for, and will not be used with, children of the size represented by the Q3s. Thus, NHTSA does not consider it reasonable or appropriate[50] to apply this final rule to child restraints that are not recommended for children weighing between 13.6 kg (30 lb) and 18.1 kg (40 lb).

In addition, NHTSA drafted this final rule recognizing that children weighing more than 18.1 kg (40 lb) seated in a child restraint will be seated high enough to benefit from a passenger vehicle's side curtain air bags.[51] In the November 2, 2020 NPRM proposing to amend FMVSS No. 213, *supra*, NHTSA proposed requiring booster seats to be labeled only for children weighing more than 18.1 kg (40 lb). If, because of that label, children are kept in safety seats until they are at least 18.1 kg (40 lb), they will be seated until that time in a CRS that will be certified to the side impact protection requirements of FMVSS No. 213a. Also, when they transition to a booster seat (or a child restraint with an internal harness intended for children weighing more than 18.1 kg (40 lb)), such booster seat or child restraint will lift them high enough to be protected by the vehicle's side curtain air bags. That label will help ensure that

---

[50] 49 U.S.C. 30111(b)(3).

[51] Children weighing more than 18.1 kg (40 lb) restrained in CRSs would have a seated height similar to the height of a 5th percentile adult female. The vehicle's side curtain air bags are designed to protect occupants, including those of the size of a 5th percentile female, in side impacts and rollovers.

children will remain in car seats longer and will only use booster seats when they are tall enough to take advantage of a vehicle's side protection countermeasures.

IV. Guiding Principles

In addition to the considerations already discussed, the following principles also guided NHTSA's decisions in developing this final rule.

1. There is a safety need for this rulemaking notwithstanding the estimated effectiveness of child restraints in side impacts.[52] Child restraint safety in side impacts can be increased. NHTSA has observed that increasing numbers of CRSs appear to have more side structure coverage (CRS side "wings") and side padding than before.[53] Because the design of the side wings and stiffness of the padding are factors that affect the containment of the child dummy and the injury measures, NHTSA considers the side wing coverage and increased padding to be overall positive developments. However, because FMVSS No. 213 did not have a side impact test, a quantifiable assessment of the protective qualities of the features was heretofore not possible. Further, testing NHTSA conducted in developing this final rule indicate that not all side wings and padding protect the same, and in some cases, "more" of a countermeasure (padding, structure) was not necessarily "better." This final rule establishes performance requirements that ensure that the wings, padding, padding-like features, or other countermeasures employed to provide protection in side impacts will be engineered to attain at least a minimum threshold of performance that will reduce unreasonable risk of injury or fatality in side impacts. For CRS designs that have not yet incorporated side impact protection features, this final rule ensures they will.

---

[52] NHTSA estimates that CRSs are already 42 percent effective in preventing death in side crashes of 0- to 3-year-old children. *Supra*.

[53] SafetyBeltSafe U.S.A. https://web.archive.org/web/20131012130527/http://www.carseat.org/Pictorial/InfantPict,1-11.pdf and https://web.archive.org/web/20120915194832/http://www.carseat.org/Pictorial/3-Five-%20Point-np.pdf

2. In making regulatory decisions on possible enhancements to CRS performance, NHTSA bears in mind the consumer acceptance of cost increases to a highly effective item of safety equipment.[54] Any enhancement that would significantly raise the price of the restraints could potentially have an adverse effect on the sales and use of this equipment. The net effect on safety could be negative if the effect of sales losses exceeds the benefit of the improved performance of the restraints that are purchased, or if older child restraints that are not designed to meet current requirements were reused. Thus, to maximize the total safety benefits of its efforts on FMVSS No. 213, NHTSA must balance those improvements against impacts on the price of restraints. In addition, NHTSA must also consider the effects of improved performance on the ease of using child restraints. If the use of child restraints becomes overly complex or unwieldy, the misuse and nonuse of child restraints could increase, and the benefits engineered into the CRS not realized in the real world.

3. NHTSA is guided by the principles for regulatory decision-making set forth in Executive Order (E.O.) 12866, "Regulatory Planning and Review," and E.O. 13563, "Improving Regulation and Regulatory Review." NHTSA's assessment of the net effect on safety of this rulemaking was limited in some respects, however. Data are sparse on side crashes resulting in severe injuries or fatalities to children in CRSs. Data indicate that side crashes resulting in fatalities to children in CRSs mainly occur in very severe, un-survivable side impact conditions. A dynamic test involving a very high velocity impact may not be reasonable if ultimately the crash replicated were basically un-survivable, or if the standard's requirements were impracticable or resulted in CRSs that could not be used as a practical matter or used correctly. Another limiting factor was the absence of information comparing the real-world performance of

---

[54] Child restraint systems are highly effective in reducing the likelihood of death or serious injury in motor vehicle crashes. NHTSA estimates that, for children less than 1-year-old, a child restraint can reduce the risk of fatality by 71 percent when used in a passenger car and by 58 percent when used in a pickup truck, van, or sport utility vehicle (light truck). "Revised Estimates of Child Restraint Effectiveness," Research Note, National Center for Statistics and Analysis (NCSA) of the National Highway Traffic Safety Administration (NHTSA), DOT HS 96855, December 1996. Child restraint effectiveness for children between the ages 1- to 4-years-old is 54 percent in passenger cars and 59 percent in light trucks. *Id*.

"good" performing CRSs versus "poor" performing CRSs. Without these data, NHTSA had to use test data and injury curves to determine the effectiveness of possible countermeasures (e.g., side wings with strategically-placed energy-absorbing padding).

V. Overview of the NPRM and Comments Received

a. Overview of the NPRM

NHTSA published the NPRM for this final rule on January 28, 2014 (79 FR 4570, Docket No. NHTSA-2014-0012). The NPRM proposed to amend FMVSS No. 213 to require CRSs designed to seat children in a weight range that includes weights up to 18.1 kg (40 lb) to meet side impact performance requirements in new FMVSS No. 213a, in addition to the requirements for frontal protection established in FMVSS No. 213.[55] We reopened the comment period on June 4, 2014, in response to a petition from the Juvenile Products Manufacturers Association (JPMA).[56]

NHTSA proposed performance requirements that child restraints must meet when tested dynamically in a sled test replicating a side crash. The NPRM proposed that child restraints would be tested while attached to a standardized seat assembly. The sled test[57] procedure was designed to replicate a two-vehicle side crash depicted in the moving deformable barrier (MDB) test of FMVSS No. 214 (striking vehicle traveling at 48.3 km/h (30 mph)) impacting the struck vehicle traveling at 24.1 km/h (15 mph). The proposed sled test simulated a near-side side

---

[55] NHTSA considered incorporating the side impact requirements into FMVSS No. 213, rather than in FMVSS No. 213a, but decided against doing so. MAP-21 directed NHTSA to undertake side and frontal impact test rulemakings in the same timeframe, with each involving different compliance schedules and different test dummies. NHTSA decided that combining the side and frontal test rulemakings into one standard (with each encompassing entirely new sled test systems and dynamic test requirements), could have made the revisions difficult to understand, particularly with the new requirements for the frontal and side tests becoming effective on different dates. The agency decided to establish the side impact requirements separately in FMVSS No. 213a for clarity and plain language purposes.

[56] The comment period was reopened until October 2, 2014 (79 FR 32211). JPMA petitioned to provide more time for child restraint manufacturers to obtain the Q3s dummy from the dummy manufacturer, arrange with test labs to evaluate their CRSs with it, conduct testing, and comment on the proposal.

[57] The sled test was based on an acceleration sled system. An acceleration sled is accelerated from rest to a prescribed acceleration profile to simulate the occupant compartment deceleration in a crash event. In comparison, a "deceleration sled" is first accelerated to a target velocity and then is decelerated to a prescribed deceleration profile to simulate the same event. The proposed acceleration sled was originally developed by the Takata Corporation. (Literature on development of the FMVSS No. 213a sled test sometimes refers to the sled as the "Takata" system.)

impact of a small passenger car. FMVSS No. 213a's side impact test represents a crash with a change of velocity of approximately 19 mph. NHTSA's analysis of field data (NASS-CDS 1995-2009) found that 92 percent of near-side crashes for restrained children (0- to 12-years-old) involved a change in velocity of 19 mph or lower.[58]

NHTSA examined data from FMVSS No. 214 MDB compliance tests to identify kinematic characteristics of the vehicle test to replicate in the sled test environment, and proposed characteristics relating to the acceleration profile of the sliding seat (representing the struck vehicle acceleration), the door velocity at time of contact with the sliding seat (to represent the struck vehicle door velocity), and the impact angle of the door with the sliding seat (to replicate the longitudinal component of the direction of force). Comments were requested[59] on whether a relative door velocity profile (the velocity of the door relative to the sliding seat) should be specified to improve the reproducibility of the test procedure using different types of sled systems.

NHTSA proposed to apply FMVSS No. 213a to CRSs manufactured and offered for sale for children up to 18.1 kg (40 lb). The NPRM proposed that child restraint systems with integral internal harnesses (car seats or safety seats) would be attached to the side impact seat assembly (SISA) using the child restraint anchorage system on the SISA (including the top tether, if one were provided).[60] Comments were requested on whether car seats should also be tested when attached by a Type 2 belt and top tether. The NPRM proposed that child restraints that do not have connectors designed to attach to a child restraint anchorage system would be tested using a Type 2 belt (e.g., booster seats recommended for children weighing less than 18.1 kg (40 lb)[61]).

---

[58] Obtained from an analysis of the National Automotive Sampling System – Crashworthiness Data System (NASS-CDS) data files for the years 1995-2009 for restrained children 0- to 12-years-old in all restraint environments including seat belts and CRS. Details of the analysis are provided in the technical report in the docket for the NPRM (Docket No. NHTSA-2014-0012).

[59] 79 FR at 4585.

[60] The child restraint anchorage system is commonly referred to as the LATCH system ("Lower Anchors and Tethers for Children").

[61] This proposal predated a November 2, 2020 NPRM in which NHTSA proposed prohibiting booster seats from being recommended for children weighing less than 18.1 kg (40 lb). If the November 2020 proposal is adopted, the FMVSS No. 213a provision would be moot.

NHTSA proposed that child restraint systems recommended for children with weights in the 10 kg to 18.1 kg (22 lb to 40 lb) range would be tested on the SISA with the Q3s test dummy.[62] Child restraints would have to meet injury criteria (expressed in terms of HIC15[63] and chest deflection) when tested with the Q3s dummy. These criteria allow a quantitative evaluation of the effectiveness of the CRS, and the ability of the CRS to prevent or attenuate head and chest impact with the intruding door. CRSs recommended for children with weights that include weights up to 10 kg (22 lb) would be tested with the 12-month-old CRABI dummy (49 CFR Part 572, subpart R). Because the CRABI dummy is designed for frontal and not side impacts, the NPRM proposed that the CRABI would be used only to measure the containment capability of the child restraint (the ability of the restraint to prevent the dummy's head from contacting the intruding door of the SISA). The dummy's head and chest instrumentation would not be leveraged since the dummy was not designed to assess crash forces in side impacts.

The NPRM also proposed requiring child restraints to meet structural integrity and other performance requirements in FMVSS No. 213. When a CRS is dynamically tested with the appropriate ATD, there should not be any complete separation of any load-bearing structural element[64] of the CRS or any partial separation exposing surfaces with sharp edges that may contact an occupant. These requirements would reduce the likelihood that a child using the CRS would be injured by the collapse or disintegration of the system, projectiles coming from a seat involved in a side crash or by contact with the interior of the passenger compartment or with components of the CRS. NHTSA notes that while some CRS structures have not been considered load-bearing structural elements in frontal testing (FMVSS No. 213) by NHTSA,

---

[62] The proposed weight ranges described in this paragraph have been adjusted in this final rule. NHTSA is adopting a 13.6 kg (30 lb) cut off instead of a 10-kg (22-lb) cut off.

[63] A measurement of the head injury criterion that is based on the integration of resultant head acceleration over a 15-millisecond duration.

[64] NHTSA interprets load bearing structure to mean a structure that: (1) transfers energy from the SISA and/or door to the CRS (e.g., installation components or CRS areas that contact the intruding door), or (2) transfers energy from the CRS to the occupant or vice versa (e.g., belts and components to restrain the child, CRS surfaces or parts transferring energy to the occupant).

these same CRS structures may be considered load-bearing structural elements in side impact testing (FMVSS No. 213a).

Injury from contacting protrusions, such as the pointed ends of screws mounted in padding, would be prevented in a similar manner as that specified for the frontal crash test in FMVSS No. 213. The height of such protrusions would be limited to not more than 0.375 inches above any immediately adjacent surface. Also, contactable surfaces (surfaces contacted by the head or torso of the ATD) would not be permitted to have an edge with a radius of less than 6.35 mm (0.25 inches), even under padding. Padding will compress in an impact and the load imposed on the child would be concentrated and potentially injurious.

The NPRM discussed NHTSA's testing of CRS models representative of seats available then in the market. NHTSA had tested twelve forward-facing and five rear-facing child restraints with the Q3s dummy. The Q3s measured HIC15 greater than 570 in seven of the twelve forward-facing CRSs tested. The Q3s measured chest deflection greater than 23 mm in three of the twelve forward-facing CRSs tested. The Q3s measured both HIC15 greater than 570 and chest deflection greater than 23 mm in three of the tests of the forward-facing CRSs. For the five rear-facing CRSs tested with the Q3s, the results of the fleet tests showed that the Q3s measured HIC15 greater than 570 in three of the five rear-facing CRSs tested, and chest deflection greater than 23 mm in two of the five tests. The Q3s measured both HIC15 greater than 570 and chest deflection greater than 23 mm in one of the five rear-facing CRSs tested. NHTSA tested 12 rear-facing CRSs with the CRABI to estimate the performance of the fleet. Using head-to-door contact as the performance criterion in the fleet tests, the results showed that the CRABI had head contact only with one child restraint (one out of the twelve models tested).

b. Summary of the Comments

NHTSA received 29 comments on the proposal.[65] Commenters included child restraint manufacturers (Dorel Juvenile Group, Graco Children's Products, Britax Child Safety, Inc UppaBaby, Safeguard/IMMI), the Juvenile Products Manufacturers Association (JPMA); consumer advocates (Safe Ride News, Safe Kids Worldwide, Advocates for Highway and Auto Safety, Consumers Union[66]); the National Transportation Safety Board; research bodies and testing organizations (Insurance Institute for Highway Safety (IIHS), University of Michigan Transportation Research Institute (UMTRI), MGA Research Corporation, ARCCA, Inc., the Transport Research Laboratory; a supplier of honeycomb (Plascore), and members of the general public.

Overview of the comments

As summarized below, all but four commenters[67] strongly supported the proposed inclusion of a side impact test in FMVSS No. 213. Several commenters expressed views on the types of child restraints they believed should be subject to FMVSS No. 213a. Many commenters discussed technical aspects of the proposed test procedure, such as the repeatability and reproducibility of the dynamic test, the availability of and characteristics of the seat foam specified for the SISA, how the tested CRS should be positioned on and attached to the SISA, and how the Q3s should be positioned in the child restraint,

Child restraint manufacturers: All child restraint manufacturers commenting on the NPRM supported the inclusion of a dynamic side impact test procedure in FMVSS No. 213, as did JPMA, their industry group. Some had questions about various issues and many responded to the questions NHTSA had asked in the preamble to the NPRM. Dorel supported adopting a test procedure that included an intruding door but believed that the Q3s dummy exhibited "artificial forward head movement before the crash impact" that places the dummy out of

---

[65] The NPRM proposing to add the Q3s dummy specifications to 49 CFR part 572 received comments separately from the NPRM preceding this final rule. Those comments are fully addressed in the November 3, 2020 final rule (85 FR 69898). They are discussed here to the extent relevant to this final rule.
[66] Consumer Union is the Policy and Action Division of Consumer Reports.
[67] These were UMTRI and three individuals.

position in relation to the side wing. Dorel expressed concerns about the repeatability and reproducibility (R&R) of results from NHTSA's test program, as did Graco, the latter providing feedback on results of test trials it conducted comparing the R&R of the proposed side impact test using data from several different test labs. Graco evaluated potential causes of variation and recommended ways to improve the sled design to reduce variation between the labs.

Some CRS manufacturers suggested revisions to technical aspects of the proposal. Britax believed the United Nations Economic Commission for Europe Regulation No. 44 [68] (ECE R.44) foam proposed for use on the SISA is not readily available and specifying it in FMVSS No. 213a may create considerable hardship from cost and availability perspectives. Britax supported the agency's views in the NPRM about testing and labeling of belt-positioning booster seats. UPPAbaby recommended against using the Q3s dummy to test rear-facing infant seats, because, it stated, "the head of the Q3s exceeds the limit to which we recommend a child be positioned in our seat." UPPAbaby supported using a lap/shoulder belt to attach car seats to the SISA, in addition to a child restraint anchorage system. IMMI supported excluding harnesses from the proposed side impact requirements and suggested ways to expand the standard's definition of a "harness." JPMA reiterated Dorel's comment about "artificial forward head movement" of the Q3s before impact, reported instances in which the text in the preamble was inconsistent with proposed regulatory text, emphasized the importance of reproducibility of test results to the objectivity of a safety standard, and provided other information.

Consumer advocates: Safe Ride News (SRN), Safe Kids Worldwide, Advocates for Highway & Auto Safety (Advocates), and Consumers Union (CU) supported the proposed rule, while suggesting that NHTSA adopt further requirements. Several commenters weighed in with responses to the technical questions in the NPRM. Many concurred that the rule should only apply to CRSs recommended for children weighing up to 18.1 kg (40 lb) but encouraged NHTSA to develop an ATD (anthropomorphic test device) (test dummy) representative of older

---

[68] ECE R44 - Restraining Devices for Child Occupants of Power Driven Vehicles ("Child Restraint Systems")

children. SRN, Safe Kids and CU suggested lead times less than 3 years. Advocates suggested NHTSA require various warnings on child restraints, such as a warning on CRSs recommended for children weighing more than 40 lb that "this CRS has not been tested in side impacts." CU suggested additional performance criteria for structural integrity and supported testing CRSs when attached with Type 2 (lap and shoulder) belts. CU believed that the Q3s is too large to test rear-facing infant seats, and that NHTSA should consider a planar limit to reduce the potential for the dummy's head to roll out of the CRS shell in some tests.

Research and testing organizations: The Insurance Institute for Highway Safety (IIHS) agreed with NHTSA's reasons for not applying FMVSS No. 213a to CRSs for children weighing more than 18.1 kg (40 lb). IIHS provided data from its belt fit program showing that children weighing more than 18.1 kg (40 lb) seated in booster seats are likely tall enough to benefit from the vehicle side curtain air bag. IIHS and the University of Michigan Transportation Research Institute (UMTRI) had concerns about possible dis-benefits from rear-facing restraints possibly becoming wider in response to meeting FMVSS No. 213a. They believed wider restraints could potentially indirectly increase injury risk for restrained children, by, for example, causing older siblings to graduate prematurely to a booster seat because wider car seats are harder to fit side-by-side. UMTRI asked whether costs to meet the proposed standard would be better spent on efforts to restrain children. The commenter stated that half of pediatric fatalities from motor vehicle crashes are to unrestrained or improperly restrained occupants, so rather than modestly improving the side impact protection for children, efforts should address improving the number of children using appropriate restraints, enhancing child restraint ease-of-use, and increasing educational efforts, such as on top tether use. ARCCA suggested that NHTSA use the Hybrid III 6-year-old and 10-year-old frontal crash dummies to assess head containment and structural integrity.

NTSB: The National Transportation Safety Board (NTSB) supported the NPRM, believing that the proposed tests encompass the majority of CRSs because the upper use limit for

most small restraint systems extends to at least 40 pounds and the lower use limit is at or below 40 pounds. Nonetheless, NTSB urged NHTSA to develop suitable large-sized dummies. NTSB expressed concern about the kinematic effects of far-side impact crashes on larger children. NTSB also supported testing CRSs with a seat belt attachment, in addition to the child restraint anchorage system attachment. The commenter encouraged NHTSA to consider ease-of-use improvements for top tethers, and use of a pure lateral acceleration pulse in the side impact test.

Individuals: Approximately 7 individuals commented on the NPRM. Most of the individuals supported the proposal, with three opposing. One of the opposing commenters argued that the injury rates for the under 1-year-old children are nearly 4 times lower than that for the 1- to 3-year-old children, so efforts would be better spent increasing the number of 1- to 3-year-old children who ride rear-facing than on adopting a side impact standard. The others believed that the estimated benefits of the proposal are low and do not support the additional costs to industry or to the consumer.

VI. Response to the Comments (Wide-Reaching Issues)

NHTSA has carefully considered the comments in developing this final rule. This section discusses the agency's decisions on matters of general importance. Following this section are discussions relating to specific topics, such as various technical aspects of the side impact test procedure, the test dummies, the standard's performance criteria, and other aspects of FMVSS No. 213a.

a. Are efforts better spent elsewhere on child seat safety?

Almost all of the commenters supported the inclusion of a side impact test in FMVSS No. 213, but a few expressed concerns about the rulemaking. Dr. Alisa Baer suggested NHTSA's efforts, and those of the industry and/or the child passenger safety community, could be better

spent on correcting misuse or nonuse of child restraints.[69] Dr. Baer argued that Table 9 of the NPRM showed "the injury rates for the under 1-year-olds (presumably the majority of whom are rear-facing) are nearly 4 times lower than for the 1-3 year-olds (presumably the majority of whom are forward-facing)." She stated that the benefits seem low and may not outweigh the costs of meeting the standard—costs, she said, that include not only material costs (such as foam) but also research and development and crash testing costs. The commenter said the time and money spent on ensuring CRSs comply with the standard could be better spent elsewhere, specifically, "at decreasing the non-use rate, especially amongst minority and low-income populations."

UMTRI and IIHS expressed concern with "possible unintended consequences of implementing this rulemaking." UMTRI suggested that only forward-facing harnessed restraints be subject to the side impact standard, "since children in rear-facing child restraints are already five times safer than those in [forward-facing] restraints in side impacts," citing a 2007 study by Henary et al. to support its view.[70] IIHS echoed this view, also citing Henary.

The commenters above also expressed concern that adding larger, padded side structures to meet the side impact standard may increase the overall width of child restraints and result in children prematurely moved from rear-facing restraints to forward-facing restraints, from harnessed car seats to boosters, and from center seating positions to outboard positions.

Agency Response

Increasing overall CRS use, tether use, and use of rear-facing restraints by children above age 1 are very important goals, as each of those measures can increase the number of child lives saved and injuries avoided in crashes. NHTSA is actively involved in increasing the use of

---

[69] Dr. Baer stated, "[C]urrent efforts to redesign seats to optimize protection in side impacts are misguided. I believe the primary focus should be on increasing the number of 1-3-year-olds who ride rear-facing as the data suggest that keeping our preschoolers rear-facing could have a much greater impact on reducing fatalities & injuries in restrained children than the proposed side impact standards will."

[70] Henary, B., Sherwood, CP., Crandall, J.R., Kent, R.W., Vaca, F.E., Arbogast, K.B., Bull, M.J. (2007) "Car safety seats for children: rear facing for best protection." Injury Prevention 13:398-402. (Note: as discussed below, this article was retracted in 2016.)

CRSs and the correct use of restraint systems. These efforts include developing and distributing training videos, producing public safety announcements and various campaigns directed to caregivers of children (in English and Spanish), leveraging all communication resources (such as social media and the NHTSA website) to provide information to parents and other caregivers, and expanding and supporting the child passenger safety technician (CPST) curriculum used to train and certify CRS fitting station technicians. In addition, NHTSA's November 2, 2020 NPRM[71] takes steps forward with proposed changes to labeling requirements that are anticipated to result in more children remaining rear-facing longer, and remaining in child safety seats longer before transitioning to a booster.

To be clear, however, this final rule focuses on improving the protection provided by child restraints in side impacts and offers expanded protection of children in a critically important crash mode -- a protection supplemental to the frontal crash protection the restraints currently provide. Front and side crashes account for most child occupant fatalities. MAP-21 requires NHTSA to issue a final rule to amend FMVSS No. 213 to improve the protection of children seated in child restraints in side impacts, but enhanced side impact protection for children has been a priority for NHTSA before MAP-21.[72] FMVSS No. 213a establishes a level of protection against unreasonable safety risks in side impacts that every safety seat sold in this country will have to provide and improves the protection afforded by the restraints above that currently required by FMVSS No. 213. The efforts to improve CRS use are complementary to and not inconsistent with improvements to side crash safety, and will continue. Improved performance in side crashes will not be achieved by improving CRS use alone, however. Establishing FMVSS No. 213a improves the performance of child restraints for the benefit of all children using the restraints.

---

[71] 85 FR 69388, *supra*.

[72] *See* NHTSA Vehicle Safety and Fuel Economy Rulemaking and Research Priority Plan 2011-2013, March 2011, discussed in the January 28, 2014 NPRM, *supra*, for this final rule (79 FR at 4572, col. 3).

NHTSA disagrees with the commenters that FMVSS No. 213a should not apply to rear-facing child restraints. Dr. Baer may have misunderstood Table 9 in the NPRM. Table 9 in the NPRM does not present injury rate and instead presents average annual estimates of Abbreviated Injury Scale (AIS) 2+ injuries.[73] Since the population of children riding in light vehicles is unknown, it is not possible to estimate injury rates. The lower annual number of injuries to children under 1 year of age could be related to fewer children of this age group involved in crashes in comparison to 1- to 3-year-old children. Applying FMVSS No. 213a to both front-facing and rear-facing child restraints ensures all rear-facing child restraints will provide a level of performance determined necessary to reduce an unreasonable risk of death or injury in side impacts to restrained occupants.

UMTRI and IIHS argue that rear-facing CRSs are five times safer than forward-facing CRSs, based on a 2007 study by Henary et al.[74] NHTSA notes that the Henary study was called into question in 2016, and after further analysis, the article was retracted by the journal *Injury Prevention*, because the survey weights in the original analysis were determined to be improperly handled. In 2017, a revised analysis of the 1988–2003 data, along with an extended analysis of the data through 2015, was published by a subset of the original authorship group.[75] Their findings reveal that, although children 0 to 23 months still had lower rates of injury while rear-facing compared with forward-facing, the sample size was too small to achieve statistical significance.

Regardless of the withdrawn Henary study, NHTSA does not find the commenters' arguments persuasive. MAP-21 limits our discretion regarding rear-facing child restraints, but even in the absence of the statutory mandate, NHTSA finds a crucial need to apply FMVSS No. 213a to rear-facing CRSs. Current guidance from the American Academy of Pediatrics (AAP)

---

[73] AIS ranks individual injuries by body region on a scale of 1 to 6: 1=minor, 2=moderate, 3=serious, 4=severe, 5=critical, and 6=maximum (untreatable).
[74] *Supra*.
[75] McMurry, T.L., Arbogast, K.B., Sherwood, C.P., Vaca, F., Bull, M., Crandall, J.R., Kent, R.W. "Rear facing versus forward-facing child restraints: an updated assessment," 2017, Injury Prevention.

and from NHTSA instruct parents that children should ride rear-facing longer, and increasing numbers of child restraints are designed to position children rear-facing longer. AAP recommends: "All infants and toddlers should ride in a rear-facing seat until they reach the highest weight or height allowed by their car safety seat manufacturer. Most convertible seats have limits that will allow children to ride rear facing for 2 years or more."[76] NHTSA recommends for children 1- to 3-years-old: "Keep your child rear-facing as long as possible. It's the best way to keep him or her safe. Your child should remain in a rear-facing car seat until he or she reaches the top height or weight limit allowed by your car seat's manufacturer."[77] Because of these recommendations and the advances in child seat designs, children are positioned rear-facing longer.[78] As most child occupant fatalities occur in front and side crashes, NHTSA believes it is critical that child restraints meet not only the Federal standard for frontal protection (FMVSS No. 213), but also a Federal standard for side impact protection (FMVSS No. 213a). Issuing FMVSS No. 213a guarantees the safety seats are tested and certified to a robust side impact standard when used rear-facing, and that children are provided at least a minimum level of protection against unreasonable risk of death or injury in side crashes.

b. Will child restraints become excessively large and heavy?

Dr. Baer, UMTRI and IIHS raised concerns that child restraints would get wider because of meeting FMVSS No. 213a. Dr. Baer commented that the side impact rule is "virtually ensuring that car seats are only going to get wider and bulkier at the head area." The commenter believed that the increased bulk would result in parents not able to fit car seats side-by-side in rear seats, and so the oldest child will be "put into a backless booster, as this is typically the narrowest, and least expensive, restraint available." UMTRI expressed concern that adding larger, padded side structures "has potential to increase the overall width of child restraints,"

---

[76] https://www.healthychildren.org/English/safety-prevention/on-the-go/Pages/Car-Safety-Seats-Information-for-Families.aspx

[77] https://www.nhtsa.gov/equipment/car-seats-and-booster-seats

[78] Rear-facing car seat use among children 1- to 3-years-old increased significantly from 9.4 percent in 2015 to 13.7 percent in 2017. Li, H. R., & Pickrell, T. (2018, September). The 2017 National Survey of the Use of Booster Seats (Report No. DOT HS 812 617). Washington, DC: National Highway Traffic Safety Administration.

which could result in children moved from center seating positions to outboard positions. IIHS echoed this concern, and stated "even moderate increases in size may result in fewer seats that fit in the rear seats of smaller vehicles."

Conversely, ARCCA[79] responded to the comments to the NPRM about the potential increase in the size and weight of child restraints. ARCCA shared information gained from car seats tested pursuant to a side impact test found in European New Car Assessment Program (Euro-NCAP) consumer education program. ARCCA stated that Euro-NCAP test results are provided to the public to aid purchasers in the selection of CRSs, and that as a result of these test programs, most suppliers of European child seat manufacturers strive to score well in those tests.

ARCCA believed that FMVSS No. 213a will have minimal effect on CRS cost, weight, and width. The commenter supported its view with an example of an infant-only CRS sold in Europe and the U.S. The restraint's European version differs from the U.S. version by way of side wings with a wing depth of 4½ inches, compared to the U.S. version that has a wing depth of only 2½ inches. ARCCA stated that when tested with a 12-month-old CRABI infant dummy in accordance with the proposed ISO side impact test protocol,[80] the U.S. version failed to contain the head. The head hit the simulated intruding door, resulting in HIC values ranging from 2,577 to 4,783. In contrast, the commenter stated, the European version, with its deeper side wings, contained the head and prevented contact with the simulated intruding door, resulting in a HIC value of 827 (a 68 to 83 percent reduction in the HIC value).

ARCCA stated that the U.S. and European versions of this infant seat were manufactured using the same plastic shell. The side wings of the European version were deepened simply by extending the expanded polystyrene (EPS) lining beyond the plastic shell. While the wings were deepened in the European version, the width of the infant seat was the same as the U.S. version.

---

[79] Comment dated July 1, 2014. There were two comments from ARCCA.

[80] ARCCA did not provide details of the ISO test protocol. ARCCA may be referring to the test details provided in the report, ISO TR 14646:2007, "Road vehicles ---Side impact testing of child restraint systems — Review of background data and test methods, and conclusions from the ISO work as of November 2005."

ARCCA stated that the weight increase due to the deepening of side wings was negligible (approximately one-eighth of a pound (1/8 lb)) and the increased cost for the extended EPS was minimal, less than one dollar. ARCCA believed the proposed rulemaking will significantly improve child occupant crash protection in side impacts and rollovers, and have minimal effect on CSS cost, weight, and width.

Agency Response

Data indicate that child restraints will not become excessively large or heavy due to FMVSS No. 213a, and rear-facing CRSs should not be excluded from the side impact protection requirements based on a concern about larger and wider CRS designs. As IIHS points out, only one rear-facing seat failed to contain the 12-month-old CRABI's head in NHTSA's test program described in the NPRM, which indicates that many rear-facing seats may not need to be redesigned in any way to meet FMVSS No. 213a.

Commenters Dr. Baer, UMTRI and IIHS speculated about bulkier child restraints and the consequences that the bulkiness could cause, but provided no data or other information supporting their views. In contrast, ARCCA provided information showing that the width and weight of an infant carrier sold in Europe (designed to provide side impact protection) were almost identical to the U.S. version of the model. ARCCA's information indicates side impact protection can be provided by car seats without having to increase width or weight.

After reviewing the comments, NHTSA followed up with further evaluation of whether manufacturers must widen forward-facing restraints to meet the side impact protection requirements. The agency evaluated two pairs of CRS models.[81] For each pair, one of the child restraints was advertised as providing more side impact protection than its related twin. NHTSA measured the width of each CRS at the locations where a child's head, abdomen and hips would be when restrained in the CRS. NHTSA found that, for each CRS advertised as having enhanced

[81] Louden, A., & Wietholter, K. (2022, March). *FMVSS No. 213 side impact test evaluation and revision* (Report No. DOT HS 812 791). Washington, DC: National Highway Traffic Safety Administration (hereinafter Louden & Wietholter (2022)). Available in the docket of this final rule.

side impact protection features over its twin, each was wider in the upper area of the CRS near the head position.

NHTSA then conducted sled tests of the CRSs using the Q3s dummy with the CRS in the forward-facing mode. For each CRS pair, the agency observed that the HIC15 value measured by the Q3s dummy was greater for the wider CRS (see Table 10). The HIC15 measurements of the Q3s were greater for both the Britax Advocate and Graco Nautilus Safety Surround, which are wider than their corresponding models, the Britax Boulevard and Graco Nautilus 65, respectively. This testing demonstrated that child restraints cannot simply be widened to meet the FMVSS No. 213a side impact test; simply widening the restraint may, in fact, degrade performance. Manufacturers will likely use different engineering solutions (e.g., designing in energy-absorbing components) to improve performance rather than just widen the restraint. A well-engineered restraint could meet the requirements of this final rule without becoming wider.

Concerns about rear-facing CRSs "bulking-up" to meet the side impact protection requirements also appear unwarranted. As will be discussed in a section below, test data from NHTSA's tests developing this final rule indicate that not all side wings and padding protect the same, and in some cases, "more" of a countermeasure (padding, structure) was not necessarily "better." Width, wings, padding, padding-like features, and other countermeasures employed to provide protection in side impacts must be engineered to attain the performance specified by FMVSS No. 213a. Adding bulk and weight to a child restraint is not necessary and can be counterproductive.

Table 10. Upper Width and HIC15 Values in Tests with the Q3s Dummy in Britax Boulevard and Britax Advocate CRS Models in Forward-Facing Configuration.

	Database Test No.	**CRS**	**HIC15**	**Advertised Side Protection**	**Upper Width**
CRS Pair 1	10105	Britax Boulevard	522	2 Layers of Side Impact Protection (energy-absorbing shell and foam-lined head rest)	460

	10106	Britax Advocate	665	3 Layers of Side Impact Protection (energy absorbing shell, foam-lined headrest and external cushions)	465
CRS Pair 2	10108	Graco Nautilus 65	609	EPS Energy Absorbing Foam and Reinforced Steel	455
	10109	Graco Nautilus Safety Surround	838	EPS Energy Absorbing Foam, Reinforced Steel and Safety Surround Technology (safety surround means that the head rest has a thicker foam)	470

NHTSA also believes there is a technical incentive in FMVSS No. 213a that encourages designs toward narrower CRSs. Under this final rule, the impact velocity between the door and the CRS will be lower for narrow CRSs compared to wider CRSs. Narrower CRSs are at a greater distance from the edge of the sliding seat and so the door will impact the CRS at a later time after first impacting the sliding seat. This later impact will result in a lower relative velocity of the sliding seat with respect to the door at the time of impact with the CRS.

NHTSA studied this aspect of the test procedure in following up on the commenters' concern about the widths of CRSs. NHTSA analyzed the relative velocity at impact time between the door and the CRS for a wide CRS (Safety 1st Advanced Air+, 520 mm maximum width) and narrow CRS (Chicco Next Fit, 460 mm maximum width). As shown in Figure 1 below, the wider CRS is impacted by the door at a relative velocity of 29.19 km/h while the narrow one is impacted at 26.59 km/h. Both HIC15 and chest deflection were lower in the test of the narrow CRS (Chicco Next Fit) than the wide CRS (Safety 1st Advance SE Air+). These CRSs are designed differently, so their countermeasures could have affected the HIC15 and chest

deflection values measured by the dummy in the tests. Yet these results suggest that the FMVSS No. 213 side impact test will not in and of itself lead to wider CRSs.

In sum, based on NHTSA's testing of various types of CRSs in the side impact test protocol, NHTSA believes that CRSs do not have to be wider or bulkier to meet the side impact performance requirements. In fact, our evaluations showed that some narrower CRSs performed better than wider CRSs.

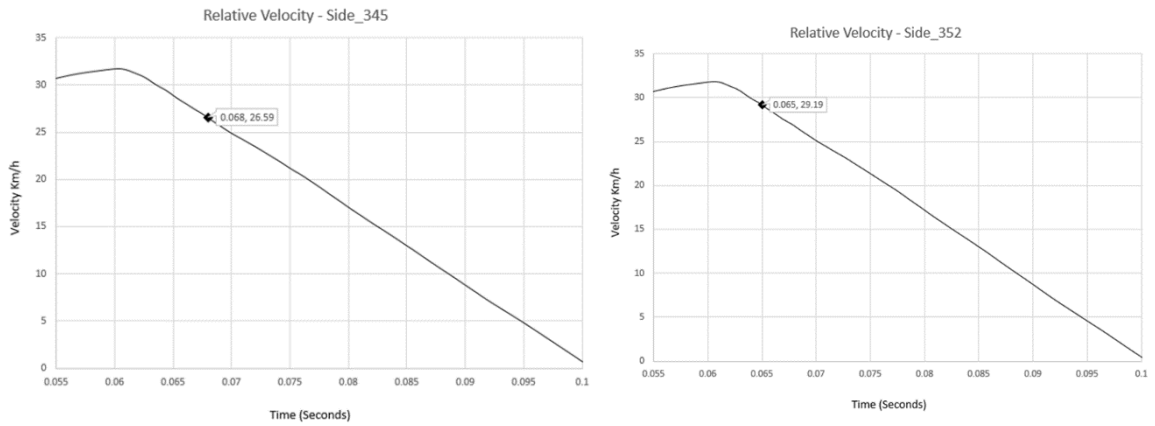

Figure 1. Relative Velocity at the time the door impacts the CRS – Chicco Next Fit (left) Safety First Advanced Air+ (right).

c. More bulk is not necessarily advantageous; the 2017 test program

In 2017, NHTSA tested child restraint systems on the side impact seat assembly (SISA) as configured to the specifications of this final rule. There were two parts to this program. The first part of the testing was conducted to compare results of tests on the final SISA configuration with test results from 2012 using the proposed SISA. Three forward-facing CRS models (Evenflo Triumph,[82] Evenflo Titan and Evenflo Tribute) and three rear-facing CRS models (Evenflo Tribute, Safety 1st Alpha Omega and Graco My Ride 65) were tested using the Q3s dummy on the final SISA to compare to the results from corresponding sled tests conducted on the proposed SISA. Paired comparison analyses (see Table 11) show that HIC15 and chest deflection results on the proposed and final SISA were not significantly different ($p>0.05$).

[82] The Evenflo Triumph was produced in 2009 which ensured this model had not been modified to improve side impact in response to the 2014 NPRM. The agency also tested a more recently produced model which had very similar performance.

These data indicate that changes to the SISA between the NPRM and final rule did not affect test results from tests of the CRSs.

Table 11. Paired Comparison T-Test Results of Tests Conducted Using the Final SISA Configuration and the Proposed SISA

	Final Rule SISA Configuration				NPRM SISA Configuration			
Dummy, Configuration and Restraint Type	**Test No.**	**CRS**	**HIC15**	**Chest Deflection [mm]**	**Test No.**	**CRS**	**HIC15**	**Chest Deflection [mm]**
Q3s in Forward Facing (FF) Convertible Installed with CRAS	10274	Evenflo Triumph (2009)	498.8	11.4	7561	Evenflo Triumph Advantage DLX	463.8	14.6
					8252	Evenflo Triumph Advantage DLX	445.8	16.1
					8254	Evenflo Triumph Advantage DLX	468.7	13.5
	10276	Evenflo Titan	1029.3	28.3	7557	Evenflo Titan	846.5	20.6
	10101	Evenflo Tribute	760.0	20.9	7547	Evenflo Tribute	788.0	20.2
		T.Test	*0.192*	*0.897*				
Q3s in Rear Facing (RF) Convertible Installed with lower anchors only (LA only)	10282	Evenflo Tribute	611.5	23.4	7554	Evenflo Tribute	763.0	22.4
	10283	Safety 1st Alpha Omega	396.4	26.0	7553	Safety 1st Alpha Omega	407.0	25.6
	10284	Graco My Ride 65	778.3	22.3	8260	Graco My Ride 65	751.0	25.0
					8264	Graco My Ride 65	681.0	31.0
		T.Test	*0.869*	*0.341*				

The second part of the testing was to assess the performance of more recently produced child restraint systems to the requirements of then-pending FMVSS No. 213a. NHTSA conducted 18 tests of 17 CRS models on the final SISA configuration. The 17 models represented 9 different types of child restraints, including infant, convertible and combination CRSs. NHTSA selected CRSs that had a variety of self-described (advertised) side impact protection features.

The data from the 2017 test program indicated that child restraint system designs had changed since the publication of the NPRM in 2014. Of the 17 models tested, one (1) model had

no side impact protection advertised, seven (7) models advertised that the product was side impact-tested or had side impact protection, and nine (9) models self-described the side impact technology used. Among the selected CRSs were 2 pairs of CRS models where one of the CRS had "incremental" improved side impact protection, based on their product description, compared to the other CRS. The Graco Nautilus and the Graco Nautilus Safety Surround (discussed above this preamble) were very similar models but the latter had a thicker head rest structure that was advertised as providing extra protection. The Britax Boulevard and Britax Advocate (also discussed above) were also CRSs that appeared to be similar, but the Britax Boulevard only had two levels of side impact protection while the Advocate had three levels of protection (according to the advertising).

NHTSA tested the child restraints with the Q3s 3-year-old child dummy and the CRABI-12-month-old dummy. Forward-facing CRSs were installed using the lower anchors of the child restraint anchorage system required by FMVSS No. 225 and the tether anchorage, and rear-facing CRSs were installed using the lower anchorages only. Tables 12 and 13 provide a test matrix of the CRS name, orientation, installation method, dummy used and recorded injury measures.

Table 12. Test Matrix and Summary Results of Tests with the Q3s ATD using the Final SISA Configuration

Database No.	CRS	Orientation	Installation	HIC15 [g]	Chest Deflection [mm]
				IARV= 570	IARV=23
10100	Chicco NextFit	FF Convertible	CRAS	**582.0**	18.7
10101	Evenflo Tribute	FF Convertible	CRAS	**760.3**	20.8
10102	Cosco Scenera Next	FF Convertible	CRAS	**979.8**	**26.8**
10103	Maxi-Cosi Pria 70	FF Convertible	CRAS	512.9	17.6
10104	Evenflo Chase	FF Combination	CRAS	**937.5**	**24.3**
10105	Britax Boulevard	FF Convertible	CRAS	521.7	7.08*
10106	Britax Advocate	FF Combination	CRAS	**665.3**	18.3
10107	Safety 1st Advance SE Air+	FF Convertible	CRAS	**616.3**	**27.7**
10108	Graco Nautilus 65	FF Combination	CRAS	**609.0**	13.6
10109	Graco Nautilus Safety Surround	FF Combination	CRAS	**838.5**	17.9

10115	Cosco Scenera Next	RF Convertible	LA Only	**677.7**	**26.2**
10116	Graco Size4Me 65	RF Convertible	LA Only	**778.5**	**23.5**
10118	Evenflo Triumph	RF Convertible	LA Only	487.8	12.2
10117	Baby Trend PROtect	RF Convertible	LA Only	**963.7**	**25.8**

Note: CRAS means the full child restraint anchorage system, *LA Only* means lower anchorages of the child restraint anchorage system, *RF* means rear-facing, and *FF* means forward-facing.

**Possible data anomaly*

Results shown in Table 12 show that among forward-facing CRSs tested with the Q3s dummy, 20 percent (2/10) had HIC15 values less than or equal to the IARV of 570, and 70 percent (7/10) had chest deflection less than or equal to the IARV of 23 mm. Among rear-facing CRSs tested with the Q3s dummy, 25 percent (1/4) had HIC15 values less than or equal to the IARV of 570 and 25 percent (1/4) had chest deflection values less than or equal to the IARV of 23 mm.

Table 13. Test Matrix and Summary Results of Tests with the CRABI 12-Month-Old ATD Using the Final SISA Configuration

TRC Test No.	CRS	Orientation	Installation	Contact
10110	Britax B-Safe 35	RF Infant	LA Only	No
10112	Cybex Aton 2 using telescopic side arm	RF Infant	LA Only	No
10111	Evenflo Embrace LX	RF Infant	LA Only	No
10114	Maxi-Cosi Mico AP	RF Infant	LA Only	No

Note: LA Only means lower anchorages of the child restraint anchorage system and *RF* means rear-facing.

As shown in Table 13, rear-facing CRS (infant carriers) tested with the 12-month-old CRABI dummy showed that 100 percent (4/4) met the containment criteria.

General Observations

The 2017 test results[83] with the Q3s dummy show fewer child restraints able to conform to the performance requirements of FMVSS No. 213a, compared to test results from earlier tests. In the 2014 tests reported in the NPRM, among 12 CRS models in the forward-facing mode tested with the Q3s dummy, 41 percent (5/12) had HIC15 values passing the IARV and 75 percent (9/12) had chest deflection passing the IARV. Additionally, 40 percent (2/5) of rear-

[83] Louden & Wietholter (2022). Available in the docket of this final rule.

facing CRSs tested with the Q3s dummy had HIC15 and chest deflection values passing their respective IARVs. Among rear-facing CRSs (infant carriers) tested with the 12-month-old CRABI dummy, 91 percent met the containment criteria in the tests.

It should be noted that for the fleet tests presented in the NPRM, NHTSA selected the CRS models to obtain a representation of the market at the time, with a variety of CRS manufacturers and models. For the 2017 testing done with the final SISA configuration, NHTSA selected CRSs that had a variety of side impact protection features, but the CRSs were not necessarily a representation of the market. The goal of the second part of the tests using the final SISA configuration presented in Tables 12 and 13 was to learn how the CRSs with advertised improved side impact protection performed in the side impact test.

To select the CRSs that would be tested for the final rule evaluations, NHTSA examined CRS designs tested in 2011-2012 with designs updated in 2016-2017. The comparisons of designs were only done visually, i.e., NHTSA did not undertake tear-down analyses of the underlying structure designs.

In the test, the agency observed that some of the designs that were not updated, or that were minimally updated, such as the Graco Classic Ride 50,[84] Evenflo Tribute, and Evenflo Chase, maintained the same performance as in 2012 (see Table 5). In contrast, the performance measures (HIC15, chest deflection, head contact) in other models that had been redesigned since the NPRM were markedly different than in their respective older versions. For example, the redesigned Britax Advocate had higher HIC15 measures, and the Safety 1st Advance SE Air+ and Cosco Scenera had higher chest deflections (see Table 14) than their respective prior versions. The redesigned Britax Advocate has a different shell, a side structure with different shape and more coverage (but has a similar adjustable head restraint as the older version). The redesigned and prior versions of the Safety 1st and Cosco models had differences in the side structures of the CRS at the head and chest areas, and the newer versions appeared to be thicker

[84] Also known as the Comfort Sport.

in the head and torso/pelvis area. The Graco Nautilus 65 2017 showed improved chest deflections compared to the Graco Nautilus 2012, while the Graco Nautilus Safety Surround 2017 had increased HIC15 compared to the Graco Nautilus 2012.

Table 14. Comparison of the Performance of Forward-Facing and Rear-Facing CRS Models in Tests with the Proposed and Final SISA Configurations

Database No.	SISA Configuration	CRS Model	HIC15	Chest Deflection [mm]	Orientation
7544	NPRM	Evenflo Chase	766	18.7	Forward Facing
8253	NPRM		987	20.1	
8255	NPRM		853	25.0	
8257	NPRM		784	25.4	
10104	Final		937	24.3	
7547	NPRM	Evenflo Tribute	788	20.2	Forward Facing
10101	Final		760	20.9	
8276	NPRM	Graco Classic Ride 50 / Graco Comfort Sport	742	19.3	
8278	NPRM		679	21.5	Forward Facing
8280	NPRM		675	19.6	
10020	Final		672	21.6	
10021	Final		716	20.6	
10022	Final		691	20.1	
7545	NPRM	Britax Advocate	365	19.5	Forward Facing
10106	Final		**665**	18.3	
7546	NPRM	Safety 1st Air Protect / Advance SE Air+	624	16.5	Forward Facing
10107	Final		616	**27.7**	
8283	NPRM	Cosco Scenera/ Scenera Next	685	19.2	Rear Facing
8285	NPRM		714	20.2	
8287	NPRM		660	**23.4**	
10115	Final		678	**26.2**	
8277	NPRM	Graco Nautilus/ Nautilus 65/ Nautilus Safety Surround	654	17.7	Forward Facing
8279	NPRM		597	19.5	
8281	NPRM		625	17.0	
10108	Final		609	*13.6*	
10109	Final		**839**	17.9	
7562	NPRM	Maxi Cosi Priori/ Maxi Cosi Pria 70	388	21.1	Forward Facing
10103	Final		**512**	*17.6*	

Note: Bold=Increased Value, Italic=Decreased Value

Based on this testing (Table 12 and Table 14) NHTSA believes that some of the more recently tested CRS designs may have added unnecessary bulk. Injury values are higher in some designs that had added mass (thickness)[85] than those without it. The 2017 testing indicates that placement of coverage, materials, internal structures, shape of the coverage and other factors must be purposefully engineered, as more is not necessarily better.

NHTSA had thought in the 2014 NPRM that CRSs with greater side coverage performed better than CRSs with a less side coverage. Designs meeting FMVSS No. 213a's performance requirements are feasible, but the data from the 2017 program show there are optimal ways to add structure and padding, and ways that added bulk could have an adverse effect. The test procedure adopted by this final rule will provide a means for CRS developers to assess, in a meaningful way, the performance of their designs and optimize the protection of children in side impacts.

d. The 40-lb limit for coverage of the standard

Consistent with the Safety Act and NHTSA's guiding principles for this rulemaking, NHTSA proposed to apply the side impact test requirements to CRSs designed to seat children in a weight range from birth to 18.1 kg (0 to 40 lb). The Safety Act requires each FMVSS to be appropriate for the particular type of motor vehicle equipment for which it is prescribed.[86] NHTSA determined the side protection standard would be appropriate for child restraints for children in the 0 to 18.1 kg (40 lb) group[87] because these children have a high rate of child restraint use (less than 1-year-old=97.5 percent and 1- to 3-years-old[88]=94.3 percent according to

---

[85] Table 10 of this final rule measured the width of the CRSs with and without additional padding and documented the description of the different side impact protection designs. Some CRSs were simply visually inspected where they may have appeared to have thicker structures.
[86] 49 U.S.C. §30111(b).
[87] This group encompasses children ages birth to about 4 years.
[88] Note that, in survey data, a child who is 1day shy of his or her 4th birthday is still considered a 3-year-old. Therefore, survey data representing 1- to-3-year-old children include 3-year-old children who are nearly 4-years-old. Also, the 40 lb weight limit represents the weight of a 75th percentile 4-year-old child and an average 5-year-old child.

the 2019 National Survey of the Use of Booster Seats (NSUBS)[89]). Their high use rate provides a good opportunity for reducing injuries and fatalities through a side impact regulation.[90]

NHTSA also determined that focusing on the 0 to 18.1 kg (40 lb) (0- to 4-years-old) age group is appropriate because countermeasures are practicable for this age group. Real-world data show that head injuries are the most common injuries in a side impact for 0- to 4-year-old children. According to McCray,[91] head injuries in children 1- to 3-years-old are slightly higher than overall for children 0 to 12 year of age. Using padding and/or larger side wings to keep the child's head contained and protected enables forward- and rear-facing CRSs to meet the requirements of this final rule without adding any additional structures to the safety seats. The Q3s dummy is also representative of children in the upper range of this age group and can be used to assess the performance of child safety seat countermeasures in protecting against unreasonable head impact.

NHTSA also explained in the NPRM that the FMVSS No. 213a side impact test replicates a near-side crash as experienced by a child under 18.1 kg (40 lb) in a safety seat. The agency's test results indicate that an important factor in the near-side impact environment is the position of the child's head with respect to the "beltline" (also referred to as the windowsill)[92] of the vehicle door. When the child's head is below the beltline--as likely with children weighing up to 18.1 kg (40 lb) (0- to 4-year-old) in child restraints—protection of the child is critically dependent on the child safety seat, as negligible benefit is expected to be attained from the

---

[89] Enriquez, J. (2021, May). The 2019 National Survey of the Use of Booster Seats (Report No. DOT HS 813 033). National Highway Traffic Safety Administration. NSUBS is a probability-based nationwide child restraint use survey conducted by NHTSA's National Center for Statistics and Analysis (NCSA).

[90] Children between 4- and 12-years-old have lower child restraint use (4- to 7-year-olds=55 percent and 8- to 12-year-olds=6 percent). Data show that 43 percent of 4- to 7-year-old and 78 percent of 8- to 12-year-old children use seat belts.

[91] McCray, L., Scarboro, M., Brewer, J. "Injuries to children one to three years old in side impact crashes," 20th International Conference on the Enhanced Safety of Vehicles, 2007. Paper Number 07-0186.

[92] The beltline of a vehicle is a term used in vehicle design and styling, referring to the nominally horizontal line below the side glazing of a vehicle, which separates the glazing area from the lower body. Passenger vehicles are required to provide head protection in side impacts and ejection mitigation in rollovers, pursuant to FMVSS No. 214 and FMVSS No. 226, "Ejection mitigation," respectively. The countermeasure provided to meet FMVSS No. 226 in passenger vehicles, a side curtain air bag, must meet performance requirements that, in effect, will necessitate coverage of the side windows to the beltline of the vehicle.

vehicle's side curtain air bags. Older children restrained in CRSs typically sit high enough so that the child's head is above the beltline and within the area covered by the side curtain air bag.

Finally, NHTSA emphasized that, due to the absence of an array of side impact child test dummies, focusing this rulemaking on CRSs designed for children in a weight range that includes weights up to 18.1 kg (40 lb) properly accords with 49 U.S.C. 30111(b)'s provision that each FMVSS be appropriate for the types of motor vehicle equipment for which it is prescribed. NHTSA determined that the Q3s dummy (weighing 14.5 kg (32 lb)) is representative of young children weighing under 18.1 kg (40 lb) and is appropriate as a test device for CRSs recommended for children weighing up to 18.1 kg (40 lb). The dummy would not be a suitable dummy to test the performance of CRSs in protecting children weighing more than 18.1 kg (40 lb), as it is not representative of children for whom the CRS is sold.

Comments Received

NHTSA received diverse comments on the 40-lb applicability threshold. Commenters generally agreed that the absence of a dummy larger than the Q3s limited the agency's applying the side impact standard to child restraints for children weighing more than 18.1 kg (40 lb), but several commenters urged NHTSA to develop new test dummies or use existing ones, such as frontal test dummies. No commenter objected to NHTSA's requiring manufacturers of booster seats to limit use of boosters to children weighing at least 18.1 kg (40 lb); six commenters expressly supported the provision (IIHS, Dorel, Britax, JPMA, UMTRI and Safekids). Advocates requested NHTSA provide more support for its determination that children weighing more than 18.1 kg (40 lb) may benefit from side curtain air bags.

IIHS concurred with NHTSA's proposed threshold applying FMVSS No. 213a to CRSs for children weighing less than 18.1 kg (40 lb) for the reasons given in the NPRM. IIHS provided data to support the view that children weighing more than 18.1 kg (40 lb) in booster seats are seated high enough to take advantage of the vehicle's side curtain air bags. The commenter explained that data it obtained during its tests of booster seat belt fit indicate that the

center of gravity (CG) of a typical 6-year-old child's head is 600-650 millimeters (mm) above the vehicle seat when seated in a booster, which is above the windowsill (beltline) of 500 mm discussed in the NPRM.[93] IIHS found that on average, the seated height of the 6-year-old dummy in a booster seat is within a few centimeters of the seated height of the 5th percentile adult female dummy used in the rear seat of IIHS's dynamic side impact test. IIHS stated that in the most recent five years of side impact evaluations, more than 80 percent of more than 200 vehicle makes and models received the top ratings for injury mitigation for the rear seat occupant, and that the proportion jumps to 95 percent for the most recent two years of evaluations. IIHS explained that in these tests, injury risk to rear-seat occupants is reduced by a combination of vehicle countermeasures such as curtain air bags, door structural improvements, and voluntary padding of the beltline. IIHS stated it expects "vehicle countermeasures that have improved outcomes for the 5th percentile female dummy in our testing would also reduce the likelihood of injury to a 6-year-old seated in a booster seat."

Agency Response

After considering the comments and other available information, NHTSA has adopted the proposed application of FMVSS No. 213a for the reasons explained in the NPRM and further discussed below. Standard No. 213a will apply to add-on child restraint systems that are recommended for use by children in a weight range that includes weights up to 18.1 kg (40 lb).[94]

Several commenters suggested NHTSA adopt other test dummies to expand the applicability of FMVSS No. 213a to CRSs for children weighing more than 18.1 kg (40 lb). Safe Kids, Consumers Union (CU) and Advocates urged NHTSA to develop a 6-year-old and/or 10-year-old child side impact dummy. Safe Ride News (SRN) encouraged the agency to work swiftly to adopt the Q6 dummy for use specifically in side impact tests. Transport Research Laboratory (TRL) supported using the omnidirectional Q-Series dummies used for side impact

[93] NHTSA proposed a 500 mm (19.6 in) beltline height for the SISA. *See,* 79 FR at 4587-4588.
[94] Harnesses and car beds are excepted from the standard.

testing in United Nations Economic Commission for Europe Regulation 129 (ECE R.129).[95] TRL stated that the dummies were capable of distinguishing differences in the design of child restraints, and that a Q6s (6-year-old child dummy) has been developed, along with a side impact kit for the Q10 (10-year-old child dummy). ARCCA suggested NHTSA use the Hybrid III (HIII) frontal impact 6-year-old dummy, and measure only head containment and structural integrity. In contrast, Graco cautioned that the use of larger test ATDs should be considered when they have been confirmed to withstand side impact crash forces and have proven biofidelity in the direction of a side collision.

NHTSA has decided against expanding the applicability of FMVSS No. 213a to child restraints recommended for children weighing more than 18.1 kg (40 lb). TRL suggested NHTSA consider the Q-series dummies because they are currently used to test CRSs in United Nations Economic Commission for Europe Regulation 129 (ECE R.129).[96] NHTSA disagrees with TRL. In 1999, First Technology Safety Systems (FTSS)[97] deemed the Q3 dummy's performance suboptimal in frontal testing, and even more so in lateral. FTSS developed the Q3s dummy in response to the Q3's suboptimal lateral performance. NHTSA has not evaluated the lateral performance of the Q series 1-, 6- and 10-year-old dummies or Q series side impact kits, but understands them to have the same shortcomings as the original Q3. Given the unsatisfactory fundamental design of the Q dummies, NHTSA decided not to use limited agency resources furthering development of the Q-series 6- and 10-year-old dummies.[98]

ARCCA suggested that NHTSA use the HIII frontal 6-year-old dummy to evaluate CRS structural integrity and head containment. The commenter argued that NHTSA could

---

[95] ECE R.129, "Uniform provisions concerning the approval of enhanced child restraint systems used on board vehicles (ECRS)," http://www.unece.org/fileadmin/DAM/trans/main/wp29/wp29regs/2013/R129e.pdf.
[96] ECE R.129, "Uniform provisions concerning the approval of enhanced child restraint systems used on board vehicles (ECRS)," http://www.unece.org/fileadmin/DAM/trans/main/wp29/wp29regs/2013/R129e.pdf.
[97] In 2010, FTSS merged to become Humanetics Innovative Solutions.
[98] NHTSA is developing the "Large Omnidirectional Child (LODC)" 10-year-old child dummy, which is designed to have biofidelic performance in lateral and frontal impact. Most of the development work has been focused on frontal and oblique impacts. NHTSA plans to evaluate and enhance the dummy for side impact testing as well.

use the HIII 6-year-old dummy since it will use the 12-month-old frontal CRABI dummy in FMVSS No. 213a's side impact test.

NHTSA disagrees. As the agency explained in the NPRM, NHTSA decided to use the frontal CRABI dummy because it would be fully restrained by the child restraint on the SISA and no injury assessment reference values would be taken. That is, the test with the fully restrained frontal 12-month-old CRABI represents a best-case scenario for passing. If a child restraint allowed the CRABI's head to contact the door under these best-case circumstances, that would be a clear demonstration, simply through observation of crash dynamics, that a child's head would contact the door when involved in a real-world crash. Thus, while the 12-month-old CRABI dummy is not a side impact dummy, it could be applied in a useful manner to evaluate aspects of CRS performance in side impact. A failure to contain the 12-month-old CRABI's head would lead to improved side impact designs (e.g., deeper side structure/wings or shape changes in CRS adjustable head restraints).

The same cannot be said about the frontal 6-year-old test dummy. Children younger than 1-year of age have the highest use of CRSs with internal harnesses (nearly 100 percent per National Child Restraint Use Special Study (NCRUSS)[99]), so fully restraining the 1-year-old CRABI in the test replicates how children will be restrained in the real world. In contrast, only 8 percent of children 6 years of age are restrained in CRSs with internal harnesses. If the HIII 6-year-old child dummy were restrained as 6-year-old children are usually restrained in the real world, it would be restrained in a booster with only a lap and shoulder belt. Many current booster seats could fail a head containment criterion when tested with a frontal 6-year-old dummy, even if the head of the 6-year-old dummy were above the beltline and therefore likely to interact with a side curtain air bag in an actual vehicle. To accurately simulate the side impact crash environment in such testing, a representation of the side air bag appears appropriate. This rulemaking has not considered the implications of

[99] NCRUSS https://crashstats.nhtsa.dot.gov/Api/Public/ViewPublication/812142

including a side curtain air bag on the SISA and doing so is beyond the scope of this final rule.

ARCCA believed that applying FMVSS No. 213a to child restraints for children weighing up to 29.5 kg (65 lb) would better protect children seated in far-side and center seating positions by preventing impact with other occupants and CRSs adjacent to the child, and helping assure they remain properly positioned in their restraint system. SRN believed it is likely that shorter children do not gain the full protection of side curtain air bags in the 18.1 to 29.5 kg (40 to 65 lb) weight range. Neither commenter provided data to support their views.

Advocates and others argued that MAP-21 does not limit improvements only to the use of CRS by children who weigh less than 18.1 kg (40 lb). NHTSA has determined that, while the language of section 31501(a) of MAP-21 is broad enough to encompass a large universe of child restraint systems, there are practical and technical reasons for applying the dynamic side impact test only to CRSs designed to seat children in a weight range that includes weights up to 18 kg (40 lb). First, the seated height of children weighing more than 18 kg (40 lb) who are restrained in child restraints is typically sufficient to take advantage of the vehicle's side impact protection systems, such as side curtain air bags. Thus, the safety need for Standard No. 213's dynamic side impact requirements is attenuated for these CRSs. NHTSA has also determined that the test procedure of FMVSS No. 213a may not be appropriate for testing child restraints recommended for children weighing more than 18.1 kg (40 lb). A 6-year-old in a child restraint will interact with vehicle side structures differently than a 3-year-old, particularly around the vehicle beltline and with respect to a side curtain air bag. The side impact seating assembly used in FMVSS No. 213a does not include a side curtain air bag. The agency is unable to conclude the side impact test reasonably replicates a near-side crash as would be experienced by a child weighing over 18.1 kg (40 lb) in the real

world, since the side curtain air bag, a key vehicle countermeasure affecting injury outcome to occupants whose heads are above the beltline, is not represented in the test.

Second, there is no side impact dummy representative of children larger than those represented by the Q3s that can reasonably be used to test CRSs for children above 18 kg (40 lb) to the dynamic side impact requirements in this final rule. As explained throughout this rulemaking,[100] without an appropriate test dummy, the data from a dynamic test would not provide a meaningful assessment of the performance of the CRS in protecting children of weights above 18.1 kg (40 lb). For FMVSS No. 213's front-impact tests, NHTSA increased the applicability of the standard to increasingly higher weight limits gradually, and only when appropriate test dummies became available for use in compliance testing, to ensure test data were meaningful and to avoid giving a false sense of security about CRS performance. NHTSA is developing the Large Omni-Directional Child ATD representative of a seated 9- to 11-year-old child.[101] When the development and standardization process of this child dummy is complete, NHTSA will consider a side impact test environment appropriate for evaluating CRSs intended for use by older and larger sized children than those subject to this final rule.

MAP-21 requires a final rule amending FMVSS No. 213, which means that the rulemaking must be conducted in accordance with the Safety Act. Under the Safety Act, NHTSA is authorized to prescribe Federal motor vehicle safety standards that are practicable, meet the need for motor vehicle safety, and are stated in objective terms.[102] "Motor vehicle safety" is defined in the Safety Act as "the performance of a motor vehicle or motor vehicle equipment in a way that protects the public against unreasonable risk of accidents occurring because of the design, construction, or performance of a motor vehicle, and against

---

[100] *See NPRM.* 79 FR at 4572-4573.
[101] Suntay, B., Carlson, M., Stammen, J., "Evaluation of the Large Omni-Directional Child Anthropomorphic Test Device," DOT HS 812 755, July 2019. Evaluation of the Large Omni-Directional Child Anthropomorphic Test Device (bts.gov)
[102] 49 U.S.C. 30111(a).

unreasonable risk of death or injury in an accident, and includes nonoperational safety of a motor vehicle."[103] When prescribing such standards, NHTSA must consider all relevant, available motor vehicle safety information, and consider whether a standard is reasonable, practicable, and appropriate for the particular type of motor vehicle or motor vehicle equipment for which it is prescribed.[104] NHTSA must also consider the extent to which the standard will further the statutory purpose of reducing traffic accidents and associated deaths.[105]

NHTSA has developed a standard that will improve the protection of children seated in child restraint systems during side impacts, in accordance with MAP-21, while meeting the criteria of Section 30111 of the Safety Act. For the reasons explained above, the agency believes that FMVSS No. 213a meets the need for safety, is stated in objective terms, and is reasonable, practicable, and appropriate.

e. Improving side impact protection for children older than 3-years-old

To be clear, this final rule applying to child restraints for children weighing up to 18.1 kg (40 lb) will significantly improve side impact protection of most children up to age 6. According to the CDC growth charts, about 100 percent of 3-year-old children, 75 percent of 4-year-old children, 50 percent of 5-year-old children, and 25 percent of 6-year-old children weigh 18.1 kg (40 lb) or less.[106] Child restraints subject to this final rule can be used by all children 0- to 3-years of age, most 4-year-olds, half of 5-year-olds, and 25 percent of 6-year-old children. This final rule improves the side impact protection of all these children.

This final rule not only improves the side impact protection offered by the safety seats but also increases the likelihood caregivers will keep the children in the safety seats longer before prematurely transitioning to a booster seat, which is an outcome that improves child

---

[103] 49 U.S.C. 30102(a)(8).
[104] 49 U.S.C. 30111(b).
[105] *Id*.
[106] Center for Disease Control (CDC) 2000 Growth Charts. https://www.cdc.gov/growthcharts/cdc_charts.htm... Last Accessed August 8, 2018.

safety.[107] Booster seats typically do not have substantial side structure "wings" or an internal belt system to restrain the child occupant, so it would be a technical challenge for booster seats to meet the side impact requirements of this final rule. However, because FMVSS No. 213a is written to apply specifically to child restraints for children weighing less than 18.1 kg (40 lb), manufacturers of booster seats will likely respond to this final rule by marketing the seats as only suitable for children weighing more than 18.1 kg (40 lb) (so as to exclude the seats from meeting FMVSS No. 213a). NHTSA believes such a change that limits use of booster seats by small children would benefit safety, as field data show that children weighing less than 18.1 kg (40 lb) are safer in child safety seats than in boosters.[108] Thus, the 18.1 kg (40 lb) threshold will benefit child passenger safety, as it will help keep children too small for booster seats in child safety seats until they are ready for a booster seat.

Further, this final rule will also benefit the side protection of children weighing more than 18.1 kg (40 lb) in several ways. A review of CRS models in the market suggests that most child restraints sold for children weighing less than 18.1 kg (40 lb) are designed to also be used by children weighing more than 18.1 kg (40 lb) as forward-facing CRSs with harnesses and as booster seats.[109] As the seated height difference between a 3-year-old and a 6-year-old is only 3.5 inches, the countermeasures used by the combination seat to protect children weighing less than 18.1 kg (40 lb) could also benefit the older child in the booster seat mode.[110] The restraints

---

[107] NHTSA recommends that children riding forward-facing should be restrained in CRSs with internal harnesses (child safety seats) as long as possible before transitioning to a booster seat. https://www.nhtsa.gov/equipment/car-seats-and-booster-seats#age-size-rec.

[108] NHTSA's November 2, 2020, NPRM, *supra,* also proposed that booster seats *must not* be labeled for children weighing less than 18.1 kg (40 lb). 85 FR at 69427, col. 3. FMVSS No. 213 currently permits booster seats only to be recommended for children weighing at least 13.6 kg (30 lb) (S5.5.2(f)). Based on an analysis of field data and other considerations, NHTSA proposed raising the 13.6 kg (30 lb) value. We are concerned that 30 pounds corresponds to the weight of a 50th percentile 3-year-old, and to the weight of a 95th percentile 18-month-old; *i.e.,* children too small to be safely protected in a booster seat. In the November 2, 2020 NPRM, we proposed to amend S5.5.2(f) to raise the 13.6 kg (30 lb) limit to 18.2 kg (40 lb), which is greater than the weight of a 97th percentile 3-year-old (17.7 kg (39.3 lb)) and approximately the weight of an 85th percentile 4-year-old.

[109] These child restraints are commonly called "combination seats." They are sold for use with younger children (with a harness) and older children (as a booster seat)

[110] This observation accords with NTSB's comment that "the proposed tests encompass the majority of CRSs because the upper use limit for most small restraint systems extends to at least 40 pounds and the lower use limit is at or below 40 pounds…" "We recognize that children at weights less than or greater than 40 pounds benefit from the increased protection provided by a harnessed CRS."

will have the same frame and can use the adjustable head protection and side padding countermeasures provided to meet this final rule to protect children weighing more than 18.1 kg (40 lb).

This final rule will also improve the side impact protection of booster seats by better assuring that only children large enough (over 18.1 kg (40 lb)) to be protected by the side curtain air bag will use the seats. NHTSA stated in the preamble to the NPRM that the height of children weighing more than 18.1 kg (40 lb) seated in a CRS would be sufficient to take advantage of the vehicle's side impact protection systems, such as side curtain air bags.[111] IIHS provided data confirming that side curtain air bags can protect children weighing over 18.1 kg (40 lb) seated in booster seats. The data show that the CG of the head of a 6-year-old child seated in a booster seat is above the beltline at 600-650 mm above the vehicle seat, and is within a few centimeters of the position of the head of the 5th percentile adult female test dummy. In IIHS's tests, the vehicles received the top ratings for injury mitigation for the rear seat occupant represented by the 5th percentile adult female test dummy, demonstrating the side curtain air bags, door structural improvements, and padding of the beltline were effective in protecting the 5th percentile adult female in side impacts. IIHS's data indicate a 6-year-old in a booster is situated in the rear seat similarly to a 5th percentile female, and that both occupants will be positioned relative to the beltline and the side curtain air bags in a manner that would enable them to benefit from the vehicle countermeasures.

NHTSA has also reviewed more recent data IIHS presented at the 2018 Society of Automotive Engineers (SAE) Government Industry Meeting.[112] The study showed that the HIII-6-year-old head CG in a high back booster and a backless booster are above the beltline and are 33 and 64 mm lower, respectively, than that of the SID-IIs 5th percentile female side impact

---

[111] 79 FR at 4573, col. 2.
[112] The IIHS SAE Government Industry meeting presentation titled "Booster seat characteristics in the US market" can be found in the docket.

dummy. These data again verify that a 6-year-old child in a booster will be in-position to be protected by the vehicle's side impact protection countermeasures, which include the side curtain air bag and door structural improvements.

Following on these findings, NHTSA measured the HIII 6-year-old dummy in four booster seat models installed on the SISA and compared its positioning with the SID-IIs dummy seated directly on the SISA. The booster seats were the Evenflo Chase and the Graco Nautilus (high back boosters), and the Harmony Youth and the Graco Affix (backless boosters). The measurements show that the HIII 6-year-old dummy's head CG, when seated in the highest booster seat (Graco Nautilus 65) is 1 mm higher than that of the SID-IIs dummy seated on the SISA, and less than 5 cm (47.5 mm) lower than the SID-IIs dummy's head when seated in the shortest booster seat (Graco Affix). All head CGs were above the beltline (see **Figure 2**).

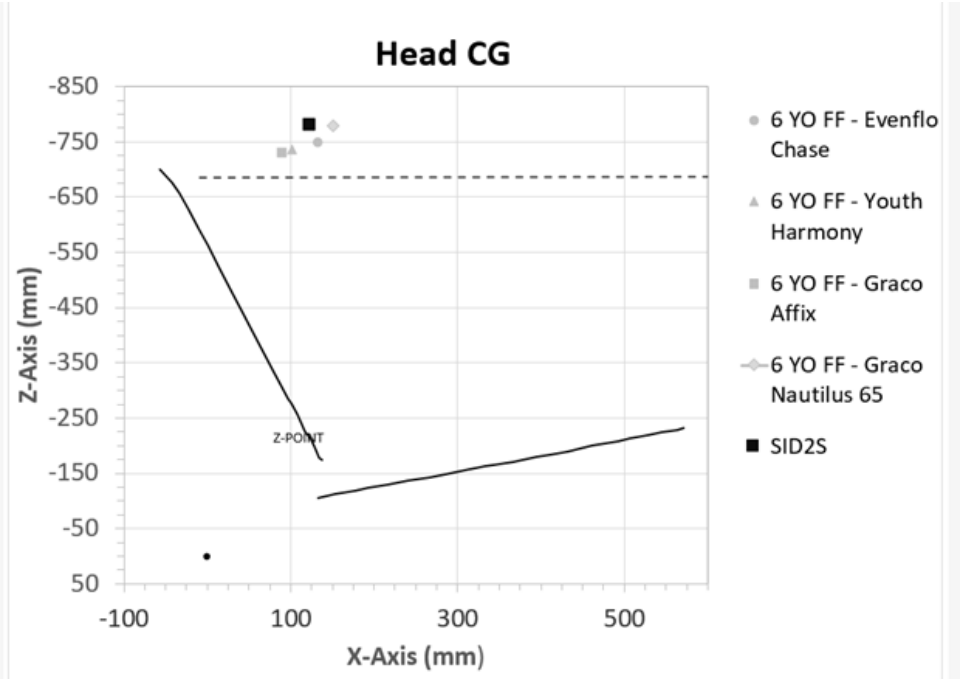

Figure 2. Head CG position of the HIII-6-year-old dummy in booster seats and the SID-IIs 5th percentile female dummy in no booster.

These data confirm the similarity between the head position of the 6-year-old dummy seated in a booster seat and that of the 5th percentile female dummy. FMVSS No. 226 ejection mitigation phase-in requirements were completed in September 2017. Thus, not only will all new vehicles have side curtain air bag technologies that will protect these older children in

booster seats, but most of the fleet will incorporate these technologies by the compliance date of this final rule. The technologies can benefit older and larger children weighing more than 18.1 kg (40 lb) or with a stature of more than 1100 mm (43.3 inches) when the children are properly positioned by a typical booster seat.

The safety of booster seats will be directly improved by assuring that only children large enough to be protected by the side curtain air bag will use the seats. Until this final rule, booster seats could be labeled for children with weights as low as 13.6 kg (30 lb). Restricting booster seat use instructions to children weighing more than 18.1 kg (40 lb) will help ensure they will be used only by children large enough to take advantage of a vehicle's side protection countermeasures. Booster seats have been shown to be highly beneficial in frontal crashes, and are needed to transition children from safety seats to a vehicle belt system. This final rule increases the safety of booster seats by enhancing their utility in side impacts, in furtherance of MAP-21's mandate to improve the protection of children seated in child restraint systems during side impacts.

Since the NPRM's publication in 2014, NHTSA has seen a few booster-seat models that provide a lower than typical boosting height (the height that a booster seat raises a seated child), which may not raise the height of children weighing more than 18.1 kg (40 lb) sufficiently to take advantage of the vehicle countermeasures. Subsequently, NHTSA sponsored a research program[113] as a first step toward determining a minimum boosting height for CRSs recommended for children weighing more than 18.1 kg (40 lb) to ensure that these children can benefit from the vehicle countermeasures and that the CRSs provide enough lift to position the child properly relative to the vehicle's lap and shoulder belts. More on this research is discussed at a later section of this final rule.

---

[113] Klinich, Kathleen D., Jones, Monica H., Manary, Miriam A., Ebert, Sheila H., Boyle, Kyle J., Malik, Laura, Orton, Nichole R., Reed, Matthew P., (2020, April). *Investigation of potential design and performance criteria for booster seats through volunteer and dynamic testing* (Report No. DOT HS 812 919). Washington, DC: National Highway Traffic Safety Administration. Link: https://rosap.ntl.bts.gov/view/dot/49119.

f. Weight as a Limiting Factor

Advocates stated "a discussion of why weight alone is being proposed as a limitation should be provided, considering the repeated discussion of the obesity problem facing the nation's youth and the agency's acknowledgement that seated height, rather than weight alone, is the determining factor."

Agency Response

The applicability of the standard is not only based on the child weight recommendation for use of the CRS but also on the child height recommendation. The NPRM proposed in S3 to apply the standard to "add-on child restraint systems, except for harnesses and car beds, that are recommended for use by children in a weight range that includes weights up to 18.1 kg (40 lb), or by children in a height range that includes children whose height is not greater than 1100 mm."[114] This final rule adopts the proposed S3. Additionally, the dummy selection for side impact dynamic testing is made taking into consideration weight and height. Any CRS that is recommended for children weighing between 13.6 kg (30 lb) (corresponding to a 95th percentile 18-month-old) and 18.1 kg (40 lb) (corresponding to a 85th percentile 4-year-old) or a height between 870 mm (34.3 inches) (corresponding to a 95th percentile 18-month-old) and 1100 mm (43.3 inches) (corresponding to a 97th percentile 4-year-old) will be tested with the Q3s dummy (see Table 15).

Table 15. Comparison of Weight and Height by Percentiles for Young Children and Child ATDs.[115]

	Weight kg (lb)					Height mm (in)				
Percentiles	**3rd**	**5th**	**50th**	**95th**	**97th**	**3rd**	**5th**	**50th**	**95th**	**97th**
12 MO Child	8.1 (18.1)	8.3 (18.5)	9.9 (22)	11.9 (26.4)	12.2 (27.2)	697.1 (27.4)	703.2 (27.7)	750.6 (29.6)	800.2 (31.5)	807.5 (31.8)
12 MO CRABI			9.9 (22.05)					740.4 (29.15)		
18 MO Child	9.3 (20.7)	9.5 (21.2)	11.3 (25.2)	13.5 (30.1)	14 (31)	753.6 (29.7)	761.1 (30)	814.4 (32.1)	868.2 (34.2)	875.9 (34.5)

[114] 79 FR at 4601.
[115] Center for Disease Control (CDC) 2000 Growth Charts. https://www.cdc.gov/growthcharts/cdc_charts.htm... Last Accessed August 8, 2018.

18 MO CRABI			11.1 (24.7)					817.9 (32.2)		
24 MO Child	10.1 (22.5)	10.4 (23)	12.3 (27.4)	14.8 (32.9)	15.3 (33.9)	800.5 (31.5)	809 (31.9)	866.9 (34.1)	924.8 (36.4)	933.8 (36.8)
36 MO Child	11.4 (25.4)	11.9 (26.4)	13.9 (31)	17.2 (38.1)	17.7 (39.3)	875.9 (34.5)	884.9 (34.8)	947.4 (37.3)	1013.8 (39.9)	1023.7 (40.3)
Q3s			14.5 (32)					978 (38.5)		
48 MO Child	12.9 (28.7)	13.2 (29.4)	16 (35.5)	20.2 (44.8)	46.6 (46.6)	936.5 (36.9)	946.4 (37.3)	1015.8 (40)	1087.7 (42.8)	1098.2 (43.2)

The commenter's reference to "the obesity problem facing the nation's youth" was not clear, but it could be that Advocates was arguing that the standard should apply to child restraints for children weighing more than 18.1 kg (40 lb). NHTSA disagrees with increasing the 40-lb threshold because the absence of a test dummy to test the side impact protection provided to heavier children makes raising the threshold non-evidence based and could provide a false sense of security about the protection afforded to the larger children. This issue is discussed at length in the section discussing the scope of the new standard.

g. Labeling CRSs for children weighing over 18.1 kg (40 lb)

1. Label as "not tested in side impacts"

Comments Received

Advocates commented that booster seats designed for children weighing more than 18.1 kg (40 lb) should be labeled to provide parents with a warning that their child may not be protected in a side crash. Advocates stated that the warning should indicate "this CRS has not been tested in side impacts for the protection of children weighing more than 18.1 kg (40 lb)." Similarly, a law student group suggested there should be labeling or consumer information on the packaging of CRSs informing consumers that the CRS has not been tested for side impact crashes for children weighing more than 18.1 kg (40 lb).

Agency Response

NHTSA has carefully considered the request but declines to adopt such a requirement in this final rule. The issue was not discussed in the NPRM, and NHTSA would like the benefit of

more public discourse on the ramifications of such a requirement. NHTSA highly values consumers' knowing how child restraints can protect their children's safety. However, information provided on or with child restraints must be carefully worded so as not to confuse caregivers or cause unintended responses to it. For example, the agency is concerned that a statement such as, "This CRS has not been tested in side impacts for the protection of children weighing more than 18.1 kg (40 lb)" may be interpreted by some as saying the CRS is not regulated in any way under any Federal standard, since an average consumer is unlikely to know the applicability or extent of FMVSS No. 213 versus FMVSS No. 213a. Before adopting such a labeling requirement, NHTSA should evaluate the risk that a caregiver might respond to the label by deciding to forgo use of a booster seat or other CRS entirely when the child reaches 18.1 kg (40 lb). Such an outcome would lead to a degradation of child passenger safety. NHTSA is also concerned that the statement might dampen efforts on the part of researchers and engineers to develop potential improvements to side impact protection for older children, such as by developing data-driven countermeasures using methods (e.g., mathematical models along with human body models) that simulate the side impact test of this final rule.

2. Head under window sill

Advocates suggested that instructions to parents (either in vehicle manuals or other sources) should indicate that children below a certain height, or whose head does not reach entirely above the sill of the vehicle window, should be restrained properly in a safety seat since they may not be afforded protection by side impact safety requirements designed to protect adults. The commenter suggested that a similar form of diagram and wording on booster seats for taller and/or heavier children would also assist parents in selecting the proper seating method to ensure protection. The law students suggested that the packaging should indicate that children whose heads do not reach above the windowsill should be restrained in a CRS.

Agency Response

NHTSA is declining these suggestions to adopt the measures in this final rule. The agency would like to know more about the need for such instructions and their effectiveness. NHTSA is conducting a research program to determine a minimum boosting height for CRSs recommended for children weighing more than 18.1 kg (40 lb). As a first step, NHTSA evaluated the boosting height of current booster seat designs recommended for children weighing more than 18.1 kg (40 lb). The evaluation included posture and belt fit measures for 24 child volunteers aged 4 to 12 seated in six different booster seat models that were installed in 3 different vehicle models and in laboratory seating conditions representing the range of cushion lengths and belt geometries in later model vehicle rear seats.[116] Among the program's next steps, the research will seek to determine whether CRS seating platforms should be at least a minimum height to position the head of the child high enough to benefit from vehicle side impact protection countermeasures. If a minimum boosting height can be determined, NHTSA may consider rulemaking to specify a minimum boosting height. Results from NHTSA's research will help inform the agency as to whether the suggested warning label is merited for some CRSs.

VII. Aspects of the FMVSS 213a Test Procedure

NHTSA developed this final rule to replicate a vehicle-to-vehicle intersection crash. NHTSA explained in the NPRM that this side impact is best replicated in a test procedure that reflects the dynamic elements of both the striking and struck vehicle in the crash. NHTSA stated that a side impact test procedure should account for: (1) the struck vehicle door velocity prior to the interaction of the striking vehicle with the door sill of the struck vehicle, (2) the acceleration profile of the struck vehicle, and (3) the impact angle to replicate the longitudinal component of the direction of force. NHTSA concluded that basing the specification of these parameters on actual vehicle crash characteristics would enable the realistic simulation of the relative velocity

[116] Klinich, Kathleen D., Jones, Monica H., Manary, Miriam A., Ebert, Sheila H., Boyle, Kyle J., Malik, Laura, Orton, Nichole R., Reed, Matthew P., (2020, April). *Investigation of potential design and performance criteria for booster seats through volunteer and dynamic testing* (Report No. DOT HS 812 919). Washington, DC: National Highway Traffic Safety Administration. Link: https://rosap.ntl.bts.gov/view/dot/49119.

between the intruding door and the CRS. Accordingly, the agency developed FMVSS No. 213a to simulate a full-scale vehicle-to-vehicle side impact based on the MDB requirements of FMVSS No. 214, "Side impact protection."[117]

Introduction

To simulate the side impact crash for purposes of testing CRS performance, NHTSA proposed using a dynamic sled test based on an acceleration sled system[118] that was developed by Takata.[119] The Takata procedure is based on an acceleration sled with a test buck consisting of a sliding "vehicle" seat (representative of a rear seat designated seating position) mounted to a rail system, along with a "side door" structure rigidly mounted to the sled buck structure. Aluminum honeycomb is mounted below the side door structure. The side door is made to reach a desired velocity prior to the aluminum honeycomb contacting the sliding "vehicle" seat structure. Together, the sliding seat and door structure are referred to as the side impact seat assembly (SISA). Figure 3 shows the Takata sled system test procedure.

---

[117] As explained above in this document, FMVSS No. 214 specifies performance requirements for the protection of occupants in side impact crashes. In a full-scale crash test representing a severe intersection collision between two passenger vehicles, FMVSS No. 214 requires passenger vehicles to protect occupants when the vehicle is struck on either side by an MDB simulating an impacting vehicle. The FMVSS No. 214 MDB crash test involves an MDB weighing 1,360 kg (3,000 lb), to represent a vehicle which is traveling at 48.3 kilometers per hour (km/h) (30 miles per hour (mph)) striking the side of another vehicle which is traveling at 24 km/h (15 mph). In the FMVSS No. 214 test, only the striking "vehicle," represented by the MDB, is moving. Using vector analysis, the agency combined the impact speed and impact angle data in crash files to determine that the dynamics and forces of a crash in which a vehicle traveling at 48.3 km/h (30 mph) perpendicularly strikes the side of a vehicle traveling at 24.1 km/h (15 mph) could be represented by a test configuration in which: the test vehicle is stationary; the longitudinal centerline of the MDB is perpendicular to the longitudinal centerline of the test vehicle; the front and rear wheels of the MDB are crabbed at an angle of 27 degrees to the right of its longitudinal centerline in a left side impact and to the left of that centerline in a right side impact; and the MDB moves at that angle and at a speed of 54 km/h (33.5 mph) into the side of the struck vehicle.

[118] An acceleration sled is accelerated from rest to a prescribed acceleration profile to simulate the occupant compartment deceleration in a crash event. In comparison, a "deceleration sled" is first accelerated to a target velocity and then is decelerated to a prescribed deceleration profile to simulate the same event.

[119] *See* Docket No. NHTSA-2007-26833-0023 for a transcript of the February 8, 2007 meeting where Takata gave a presentation on its side impact test procedure. NHTSA also published two papers on the agency's research and testing on the Takata test procedure (Sullivan (2009) and Sullivan (2011), discussed *infra*).

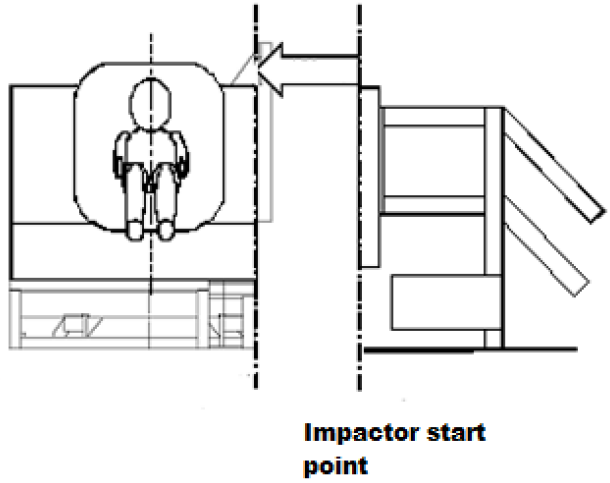

(a) Pre-Test Condition

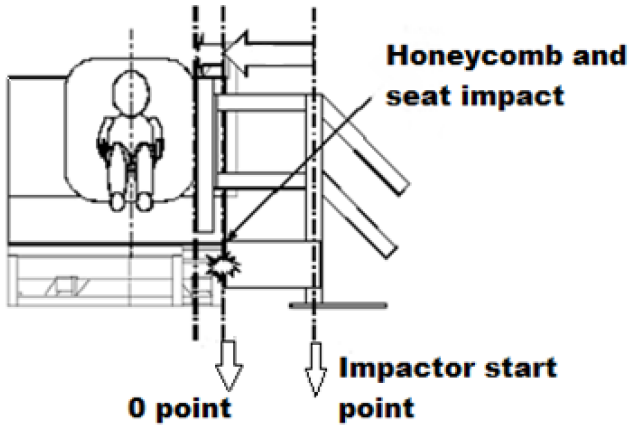

(b) At Time of Door Contact With CRS

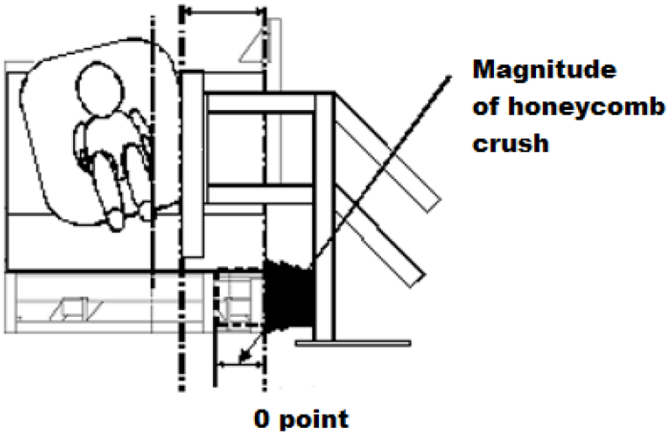

(c) At End of Test

Figure 3 - Takata Side Impact Sled System--(a) Pre-test condition, (b) at time of door contact with CRS, and (c) at end of test (final travel of door).

NHTSA conducted three studies in advance of the NPRM to identify test parameters that would adapt the Takata sled system for use in FMVSS No. 213a. NHTSA's 2009 Initial

Evaluation of Child Side Impact Test Procedures[120] used a modified Takata test buck to develop test parameters that would simulate the FMVSS No. 214 test procedure. The selected parameters were based on ten vehicles that had previously been tested in accordance with FMVSS No. 214 and a series of four full-scale crash tests. NHTSA concluded that the sled test procedure appeared to be repeatable and could distinguish between child restraint models using some of the injury measures. Comparison of results from side impact sled tests using the Q3s dummy with comparable full-scale vehicle side impact crash tests indicated that the dummy responses exhibited similar trends in the sled and full vehicle crash tests. NHTSA also announced its intention to perform further sled testing to refine test parameters such as door stiffness and geometry, and to further assess issues such as the effect of an armrest on CRS kinematics and dummy responses.

The follow up to NHTSA's initial evaluation, NHTSA's 2011 Evaluation of a Potential Side Impact Test Procedure,[121] presented subsequent tests and vehicle surveys conducted to determine characteristics of various components of side impact test bucks such as the seat cushion, door panel, and an armrest that would result in improved real world representation of the side impact sled test procedure.

NHTSA also conducted a vehicle survey[122] to examine the geometry and contact characteristics of vehicle rear seats in order to select the geometry and material characteristics necessary to replicate the physical environment of a typical rear seat in a side impact test. The 2012 Vehicle Rear Seat Study recorded measurements of 43 individual rear seating position in 24 model year 2010 vehicles to obtain dimensional characteristics of rear seat attributes that could affect the performance of CRS in the rear seat compartment. In addition, NHTSA

---

[120] Sullivan, L. K., Louden, A. E., "NHTSA's Initial Evaluation of Child Side Impact Test Procedures," 21st International Conference on the Enhanced Safety of Vehicles, Paper No. 09-0539, 2009 [hereinafter Sullivan et al. (2009)].

[121] Sullivan, L.K., Louden, A.E., Echemendia, C.G. "NHTSA's Evaluation of a Potential Child Side Impact Test Procedure" 22nd International Conference on the Enhanced Safety of Vehicles, ESV Paper No. 2011-0227, 2011 [hereinafter Sullivan et al. (2011)].

[122] Aram, M.L., Rockwell, T., "Vehicle Rear Seat Study," Technical Report, July 2012. Docket No. NHTSA-2014-0012, Item No. 0005 (hereinafter 2012 Vehicle Rear Seat Study).

surveyed the features of vehicle child restraint anchorage systems in furtherance of the agency's data on the systems. As discussed further below, NHTSA relied on these measurements to create a rear seat environment for the SISA that represented vehicles in the modern fleet.

NHTSA's studies showed that the Takata-based test procedure demonstrated versatility for tuning parameters to obtain the desired test environment. NHTSA could tune the parameters to simulate the two-vehicle side crash replicated in the MDB test of FMVSS No. 214. NHTSA also noted that the test could be easily modified to change the impact angle to introduce the longitudinal crash component present in the FMVSS No. 214 tests. In addition, in its preliminary evaluation of the Takata test protocol, after making minor modification to the test parameters[123] NHTSA determined that the test procedure was repeatable and could provide results that distinguished between the performance of various CRS models based on the design of the side wings and stiffness of the CRS padding.[124]

Accordingly, based on the agency's research, NHTSA proposed a side impact test for FMVSS No. 213a based on a refined and improved Takata sled design. In addition, the NPRM proposed test specifications developed by NHTSA ensuring the test procedure appropriately simulates the FMVSS No. 214 MDB test, including the velocity of the striking vehicle, the struck vehicle and the intruding door. Specifically, the NPRM proposed the following specifications of the sled test to simulate the FMVSS No. 214 MDB impact test of a small passenger car with the child dummy restrained in a CRS positioned in the rear seat near-side of the impact:

1. The test buck consists of a sliding seat mounted to a rail system along with a "side door" structure rigidly mounted to the sled buck structure. The sliding seat and side door are representative of today's passenger vehicles. The sliding seat of this "side impact seat assembly" (SISA) is positioned sufficiently away from the side door to allow the sled to

[123] Sullivan et al. (2009).
[124] Sullivan et al. (2011).

reach a desired velocity (31.3 km/h) prior to the time the sliding seat starts to accelerate to a specific acceleration profile.

2. The center of the CRS is positioned 300 mm from the edge of the sliding seat next to the intruding door (simulating a near-side position). At the time the sliding seat starts to accelerate, the armrest on the door is located 32 mm (1.3 inches) from the edge of the seat towards the CRS.
3. CRSs would be installed on the sliding seat using CRAS. Belt-positioning seats covered by the NPRM would be tested using a lap and shoulder belt on the sliding seat of the SISA.
4. NHTSA proposed injury criteria (expressed in terms of HIC15 and chest deflection) for the Q3s. We proposed just to require head containment of the 12-month-old CRABI (assess the ability of the CRS to prevent the ATD's head from contacting the intruding door of the SISA). In addition, the NPRM proposed to require CRSs to meet structural integrity requirements when tested with the respective ATDs, and other assorted performance criteria for belts and buckles.

a. Overview

In this final rule, NHTSA finalizes a test procedure that builds on the SISA and test specifications proposed in the NPRM. The agency has adjusted the final test procedure from that proposed in the NPRM, after considering the comments, results of additional testing of the SISA, and the agency's work on the proposed FMVSS No. 213 frontal test procedures.[125] As discussed further below, we modified the SISA to minimize variability in installation, make the SISA equipment more durable, and better match the proposed frontal FMVSS No. 213 seat assembly. In addition, we further specified some of the side test parameters, including a relative door velocity profile and the distance of the door armrest to the vehicle seat, to improve the

[125] *See* NPRM, 85 FR 69388, November 2, 2020, *supra*.

repeatability and reproducibility of the test procedure. The final SISA and test specifications are discussed below in turn.

b. Side impact seat assembly characteristics

The side impact seat assembly (SISA) consists of a sliding "vehicle" seat mounted to a rail system, along with a side door structure rigidly mounted to the sled buck structure. In the NPRM, NHTSA described the agency's efforts to ensure that the sliding "vehicle" seat and side door would be representative of today's passenger vehicles. Both NHTSA's initial evaluation studies and the 2012 Vehicle Rear Seat Study, discussed above, examined the geometry and contact characteristics of present-day vehicle rear seats. The agency used this information to design a seat assembly with the geometry and material characteristics that were necessary to replicate the physical environment of a typical rear seat relevant to the side impact test. NHTSA identified the following rear seat features to replicate in the SISA: (1) rear seat geometry (seat back angle, seat pan angle, beltline height from approximately the vehicle seat bight (i.e., the intersection of the seat cushion and the seat back), height of the top of the armrest (from the seat bight)), (2) rear seat cushion stiffness, and (3) door shape (height of window, armrest thickness (protrusion of the armrest from the door[126])) and padding.

In addition, NHTSA performed a series of sled tests as a sensitivity analysis to better understand the effect of the sled system configuration on dummy responses.[127] The parameters evaluated were the seat cushion stiffness, door padding stiffness, presence of armrest, and windowsill height.

Based on the agency's research, NHTSA proposed using a SISA for the FMVSS No. 213a test procedure that modified aspects of the original Takata sled specifications to make the SISA better represent the rear seat environment. Figure 4 shows the proposed SISA.

---

[126] The original Takata sled buck did not include an armrest. NHTSA modified the sled buck to include an armrest.
[127] Sullivan et al. (2011).

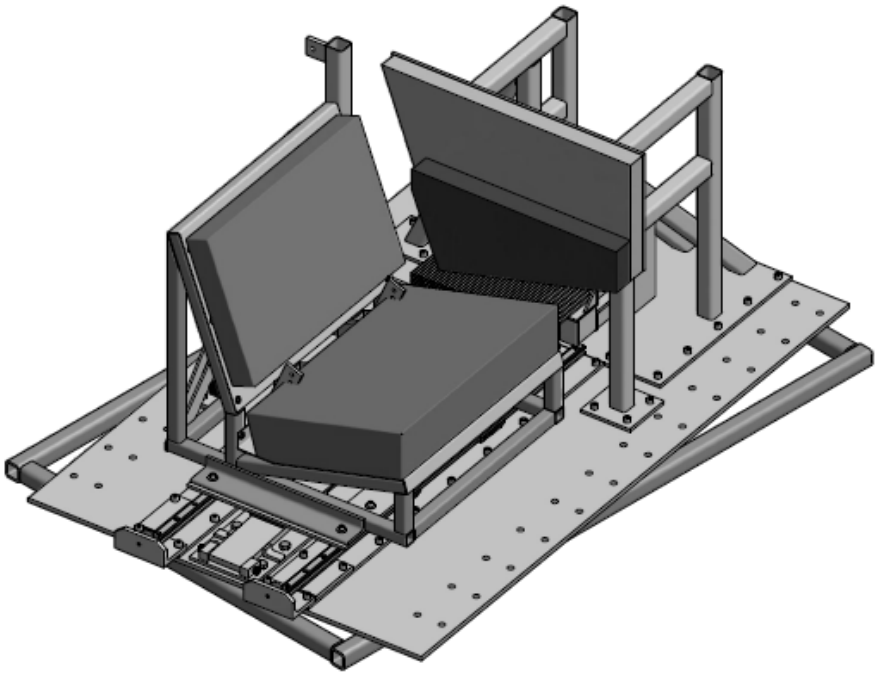

Figure 4. Proposed SISA Depiction from the NPRM SISA Drawing Package (For illustration purposes only)

The proposed SISA had the following specifications:

- A single seating position representing a rear outboard seating position.
- Seat back and seat pan angles of 20 and 15 degrees, respectively, which is the same as the original Takata buck. Both angles were well within the ranges found in NHTSA's vehicle survey, and those angles were the same as the ECE R.44 bench seat.
- ECE R.44 rear seat cushion foam. NHTSA proposed using this foam because it was more representative of the stiffness of current rear seats in the vehicle fleet than other cushion foams surveyed (FMVSS No. 213, NPACS). However, NHTSA also noted that sensitivity studies showed seat foam cushion stiffness had little effect on dummy responses in the side impact test procedure.
- A 64 mm (2.5 inches) thick armrest attached to a 51 mm (2 inches) thick door panel. The armrest was a "stiff" foam (United Foam #4), attached to an "average"

stiffness foam padding door (Ethafoam 220). NHTSA stated that this configuration appeared to be representative of the rear seat environment, and the armrest stiffness using the "stiff" United Foam #3 was within the range of armrest thickness of surveyed vehicles. Importantly, dummy responses with this armrest/door configuration were similar to those seen in vehicle crash tests.[128]

- A beltline height of 500 mm (19.6 inches). Although this value was slightly higher than the average beltline height of vehicles surveyed (489 mm), NHTSA proposed the 500-mm value to ensure that the proposed side impact test was sufficiently stringent to account for vehicle beltlines that were higher than the average value.
- Lower anchorages of the CRAS symmetrically located on either side of the centerline of the simulated outboard seating position of the SISA bench seat. The location of the top tether anchorage was on the lower rear frame of the seat, similar to the typical location of a tether anchorage in captain's seats in minivans.

In addition to these aspects of the SISA that the agency discussed in the preamble, NHTSA included detailed drawings of the SISA in the docket for the NPRM, which further specified materials and measurements of every part of the SISA.

While NHTSA welcomed comments on all aspects of the proposed rule, the agency sought comment on specific aspects of the SISA, including the proposed seat cushion foam and seat cushion assembly. In addition, NHTSA had stated the agency had initiated a research program to evaluate how the test parameters of the FMVSS No. 213 frontal sled test should be updated to reflect any significant real-world developments.[129] The agency stated it planned to develop a test bench seat with seat cushion stiffness that has characteristics of seat cushions in recent vehicle models, pursuant to MAP-21's mandate to amend the standard seat assembly

---

[128] Sullivan et al. (2011).
[129] NHTSA Vehicle Safety and Fuel Economy Rulemaking and Research Priority Plan 2011-2013 (Docket No. NHTSA-2009-0108-0032)

specifications under FMVSS No. 213's frontal test "to better simulate a single representative motor vehicle rear seat."[130] NHTSA stated in the NPRM for side impact[131] that it would consider, to the extent possible under the timeframes for the research and rulemaking programs, the merits of using this updated frontal test seat cushion foam in the side impact sled.

Since publication of the 2014 NPRM, NHTSA continued to develop a standard seat assembly for upgrading the FMVSS No. 213 frontal impact sled test using the SISA sliding seat as a starting point. The November 2, 2020 NPRM proposing amendments to FMVSS No. 213 described the agency's continued work updating aspects of the vehicle rear seat environment, such as the seat back height, seat cushion stiffness, and CRAS and seat belt anchorage locations, so that the frontal impact seat assembly would be more representative of vehicle rear seats. The proposed standard seat assembly for the frontal impact sled test is similar to the proposed SISA sliding seat, although the proposed frontal impact seat assembly has some more up-to-date specifications for features such as the seat cushion thickness, seat back height and anchorage locations. These differences were described in detail in the November 2, 2020 NPRM.[132]

In the November 2020 NPRM, NHTSA sought comment on whether the side impact test seat assembly and the seat assembly proposed in the 2020 NPRM should be consistent.[133] NHTSA stated in the November 2, 2020 NPRM that using the same specifications of the standard seat assembly (including seat geometry, seat cushion, and anchorage locations) for both the side impact test and a frontal impact test would make sense, since the agency is seeking to test CRSs on a representative seat assembly and the same passenger vehicles are involved in side and frontal crashes.

The agency also stated that the standard seat assembly proposed in the January 2014 side impact NPRM is substantially like the seat proposed in the November 2020 NPRM, but that

---

[130] Quoting MAP-21, §31501(b), "Frontal Impact Test Parameters."
[131] 79 FR at 4586, col. 2.
[132] 85 FR at 69393.
[133] *Id*., col.2-3.

NHTSA believes the seat assembly proposed in the November 2020 NPRM is a better seat assembly primarily regarding the cushion foam. NHTSA explained that the January 2014 NPRM specified use of the ECE R.44 seat cushion, while the November 2020 proposed seat assembly incorporates seat cushion foam that is more representative of the seat cushion stiffness of the current vehicle fleet. NHTSA stated that the proposed seat cushion "is also easier to procure than the ECE R.44 foam. Commenters to the January 2014 side impact NPRM expressed concerns about the difficulty to source the ECE R44 seat foam, which is only available from one overseas supplier. [Footnote omitted.] NHTSA tentatively believes that using the foam specified in this NPRM for the frontal test seat assembly would alleviate those concerns."

Four commenters (Evenflo, Cybex, Graco and Consumer Reports) to the November 2, 2020 frontal upgrade NPRM expressed support for having consistent side and frontal impact test seat assemblies in FMVSS No. 213 and FMVSS No. 213a, respectively. Evenflo noted that using the same seat assembly in both test methods will reduce variables in assessing a CRSs. Cybex commented that having a more representative seat assembly as the one proposed for the frontal impact sled test would be beneficial to real-world crashworthiness. No commenter opposed having consistency between the seat assembly used in the frontal and side impact sled tests.

NHTSA is moving forward with a SISA that differs from the 2014 proposed SISA in some respects to make it more representative of rear seats in the current vehicle fleet, to address comments, and to better align the SISA with the proposed seat assembly for the FMVSS No. 213 frontal impact test. These structural changes and the agency's responses to other comments on the SISA are discussed in detail, below. Other minor modifications, like minor changes to accelerometer placement and the addition of stiffening structures to reduce vibrations, are

discussed more at length in the "FMVSS No. 213 Side Impact Test Evaluation and Revision" report included in the docket for this final rule.[134]

NHTSA believes that the above modifications make the SISA better representative of the rear seat environment and better able to reproduce the characteristics of a side impact. In addition, these modifications address comments on the availability and durability of materials used in the SISA, and address comments on repeatability and reproducibility of the final test procedure. Importantly, and as discussed further below, NHTSA performed tests with the final SISA configuration to compare the test results with those using the proposed SISA, and concluded that test results with the updated SISA in this final rule are not significantly different from those with the proposed SISA. The following sections discuss comments on aspects of the sliding seat, door, and maintenance of the SISA.

1. Seat characteristics

i. Rear seat cushion stiffness

To determine the stiffness of the seat foam for the proposed SISA, NHTSA considered several data points. We considered the vehicle survey that measured the rear seat cushion stiffness of 13 vehicles, as well as the seat cushion stiffness of the seat cushions used in FMVSS No. 213, the United Nations Economic Commission for Europe, "Uniform provisions concerning the approval of restraining devices for child occupants of power-driven vehicles (child restraint systems)" (ECE R.44), and the New Programme for the Assessment of Child Restraint Systems (NPACS)[135] programs.[136] The results of the survey showed that the FMVSS No. 213 foam was softer than all the vehicle seat foams surveyed. The ECE R.44 and NPACS foams were stiffer

---

[134] Louden & Wietholter (2022).

[135] The NPACS consortium was funded in 2005 by governments of the United Kingdom, the Netherlands, Germany, the Generalitat of Catalonia, and five non-governmental organizations. The objective of NPACS is to provide scientifically based EU wide harmonized test and rating protocols to offer consumers clear and understandable information about dynamic performance and usability of child restraint systems. NPACS is similar to NHTSA's New Car Assessment Program (NCAP), and to the NCAP program administered in Europe (EuroNCAP), in that NPACS is a voluntary consumer information program, rather than a binding regulation. (Note, however, that NPACS is designed to test CRSs, while NCAP focuses on vehicle performance.)

[136] Sullivan et al. (2011).

than the FMVSS No. 213 foam, and more representative of the vehicles surveyed. However, NHTSA's sensitivity analysis to determine the effect of the seat cushion stiffness on dummy readings and CRS performance showed that seat cushion foam stiffness had little effect on the dummy responses in these side impact tests.

Accordingly, NHTSA initially proposed that the seat cushion foam for the SISA have the stiffness of the ECE R.44 seat foam, given that the ECE R.44 foam was more representative of the current rear seats in the vehicle fleet than the FMVSS No. 213 cushion foam. At that time, NHTSA had not yet developed the NHTSA-Woodbridge seat cushion foam, so NHTSA stated that the agency preferred the ECE R.44 foam over the NPACS foam because although the two foams were similar in stiffness, the ECE R.44 foam was more readily available than the NPACS foam. NHTSA invited comment on this proposed seat cushion foam and seat cushion assembly.

NHTSA also stated that the agency had initiated a research program to evaluate how the test parameters of the FMVSS No. 213 frontal sled test should be updated to reflect any significant real-world developments. Within this program, NHTSA planned to develop a test bench seat with seat cushion stiffness characteristic of seat cushions in recent vehicle models. NHTSA stated that the agency would consider, to the extent possible under the timeframes for the research and rulemaking programs, the merits of using this updated seat cushion foam in the side impact sled.

Comments Received

CU, Dorel, Graco and UPPAbaby commented that the ECE R.44 foam was appropriate for side impact testing. CU and UPPAbaby also suggested including the same foam in the FMVSS No. 213 frontal impact test. CU added that the ECE R.44 foam should be used in the frontal impact FMVSS No. 213 test because a stiffer standard seat foam may result in larger performance differences among CRSs than that with the current standard seat assembly in the FMVSS No. 213 frontal impact test.

Relatedly, while MGA did not provide specific comments on the proposed seat foam, MGA did state that there are few areas where FMVSS No. 213 and FMVSS No. 213a could be harmonized with regards to the seat cushion. Specifically, MGA stated that the cover material, foam insert, and overall assembly for the seat cushion could be harmonized, referencing FMVSS No. 213's leather type zippered cover over two softer pieces of foam, compared to the FMVSS No. 213a's cloth type cover wrapped over a single piece of stiffer foam. Similarly, Graco requested that NHTSA consider the use of the same foam for frontal crash testing as used in side testing in any future improvements to FMVSS No. 213.

An individual, Mr. Hauschild, commented that the seat foam needs to be representative of the current vehicle fleet, and added that research has shown that the foam of the FMVSS No. 213 standard seat assembly for forward-facing seat testing reacts differently than vehicle manufacturer seats and can influence the performance of the CRS (citing Tylko et al., 2013[137]). Graco agreed with the use of standard seat foam that is more representative of current vehicles.

Britax, JPMA, and Graco noted the difficulty to source the ECE R.44 foam. Britax stated that while it did not oppose the use of the ECE R.44 foam in principal, it strongly recommended that NHTSA survey the marketplace to better determine the availability of this type of foam for U.S. CRS manufacturers. Britax stated that the ECE R.44 foam is not readily available and to require its use for side impact testing may create a considerable hardship both from a cost and availability perspective. Britax stated that supplying consistent foam for FMVSS No. 213 standard seat assembly requirements has been a challenge for all CRS manufacturers who engage in internal sled testing. Britax explained that it has always been difficult to source cost effective supplies of foam that have the density, stiffness and qualities necessary for sled testing. Britax suggested that, since the seat cushion foam stiffness has minimal effect on dummy responses (as stated by the agency), it may be a reasonable solution to continue to permit the use of FMVSS

[137] Tylko, S., Locey, C. M., Garcia-Espana, J. F., Arbogast, K. B., & Maltese, M. R. 2013. Comparative performance of rear facing child restraint systems on the CMVSS 213 bench and vehicle seats. Ann Adv Automot Med 2013. 57, 311.

No. 213 seat cushion foam. Graco explained that various parties use different types of foam due to the difficulty of sourcing the foam.

Britax and Graco also commented on the importance of having sufficient foam specifications to source the foams. Britax stated that it would be essential to specify foam density and content. Graco requested that NHTSA provide clear seat foam drawings, material definition, indentation load-displacement (ILD) properties and a seat foam test methodology.

JPMA commented that all members were concerned with viable competitive test equipment sourcing and availability and that it believed a single source and supply with no competition is untenable.

Agency Response

NHTSA's research program to develop a standard seat cushion with similar characteristics of seat cushions in more recent vehicle models resulted in the development of a foam, referred to as the "NHTSA-Woodbridge"[138] seat cushion foam,[139] that the agency proposed to use in the November 2, 2020 NPRM to upgrade the frontal impact seat assembly. In that NPRM, NHTSA noted that after additional research and testing,[140] the agency determined that the ECE R.44 and NPACS seat foam stiffness were not representative of the U.S. vehicle fleet (in both quasi-static and dynamic stiffness). Specifically, Figure 5 below shows that the ECE R.44 and NPACS foams were found to be stiffer than the vehicle fleet. The FMVSS No. 213 foam, tested on the standard seat assembly with a cover, is on the low end of the vehicle fleet rear seat stiffness. The NHTSA-Woodbridge seat cushion shows an average dynamic stiffness response compared to the vehicle rear seats sample.

---

[138] The Woodbridge Group is a supplier of automotive seat foam, http://www.woodbridgegroup.com.
[139] The NHTSA-Woodbridge seat cushion consists of the foam material covered by the cover used in test procedures of ECE R.44. The ECE R.44 cover material is a sun shade cloth made of poly-acrylate fiber with a specific mass of 290 (g/m^2) and a lengthwise and breadthwise breaking strength of 120 kg (264.5 pounds) and 80 kg (176.3 pounds), respectively.
[140] Wietholter, K., Louden, A., Sullivan, L., & Burton, R. (2021,September). Evaluation of seat foams for the FMVSS No. 213 test bench. Washington, DC: National Highway Traffic Safety Administration.

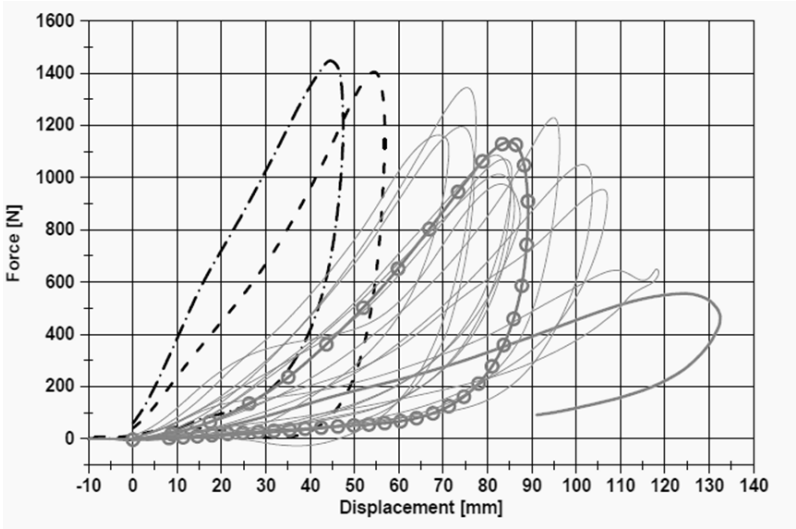

Figure 5. Dynamic force-displacement (stiffness) of ECE R.44 seat foam (black-dashed), NPACS seat foam (black-dashes and dots), FMVSS No. 213 seat cushion (dark grey solid), seat cushions on vehicle rear seats (light grey solid), and the November 2020 proposed NHTSA-Woodbridge seat cushion (solid with circles).

NHTSA is adopting the NHTSA-Woodbridge seat cushion foam in the SISA because it has characteristics that best represent an average vehicle rear seat in the United States. In addition, the NHTSA-Woodbridge seat cushion foam is easier to procure than the ECE R.44 foam proposed for use in the 2014 NPRM. To simplify procurement of the desired seat cushion foam, NHTSA's FMVSS No. 213 Side Impact Test Evaluation and Revision report sets forth characteristics of the NHTSA-Woodbridge seat cushion foam.[141] Further details of seat cushion characteristics are available in the drawings that are in the docket for this final rule. In response to Britax, Graco, and JPMA's concerns about the ability to source cost-effective seat cushion foam, NHTSA launched a program to identify foam manufacturers and has found four sources that can provide the specified foam. These sources are available in the report, "Foam Feasibility Study,"[142] that is available in the docket for this final rule.

In response to MGA's comment that the seat cover material, foam insert, and overall assembly for the seat cushions could be harmonized between FMVSS No. 213 and 213a, the

[141] Louden & Wietholter (2019).
[142] "Foam Feasibility Study by National Center for Manufacturing Sciences" (NHTSA, June 2018). This document is in the docket for this final rule.

agency has taken steps to keep FMVSS No. 213a as harmonized as possible with the FMVSS No. 213 frontal seat assembly proposed on November 2, 2020. This includes the cover material, foam insert, and overall assembly of the seat cushions. NHTSA agrees that there are benefits to harmonizing FMVSS No. 213 and 213a to the extent possible, and that it makes sense that the seat assembly used to represent vehicle seats in the side crash test would be similar to the seat used in the frontal test.

While CU, Dorel, Graco and UPPAbaby considered the ECE R.44 seat foam appropriate for side impact testing, NHTSA's additional research shows that the ECE R.44 foam is stiffer than an average vehicle rear seat. The NHTSA-Woodbridge foam is softer than the ECE R.44 foam and is a good representation of the average cushion stiffness of rear seats in the current vehicle fleet. This also accords with Mr. Hauschild and Graco's suggestion to have a seat foam that is representative of the current vehicle fleet.

In the November 2, 2020 NPRM upgrading the FMVSS No. 213 frontal impact seat assembly, NHTSA proposed the NHTSA-Woodbridge seat cushion foam thickness of 4.0 ± 0.5 inches (101.6 ± 12.7 mm). JPMA and Graco expressed concern regarding the proposed tolerance of the seat cushion thickness in their comments to the November 2, 2020 NPRM, noting that the proposed tolerance in the seat cushion thickness (±0.5 inches (±12.7 mm)) could result in increased test variability. JPMA reiterated its concerns regarding the proposed tolerance in the seat cushion foam thickness in a meeting with NHTSA on December 15, 2021,[143] and provided sled test results showing variability in performance measures when tested with seat foam thicknesses ranging between 3.67 to 4.42 inches (93.2 to 112.3 mm). NHTSA agrees with the commenters on this issue and sees merit in reducing the tolerance of the seat cushion thickness to a level that would reduce variability in testing, while also ensuring availability of foam that meets specifications. After reviewing all available information, NHTSA is specifying

[143] We submitted a memorandum summarizing this meeting to Docket No. NHTSA-2014-0012.

a NHTSA-Woodbridge seat cushion foam thickness of 4.0 ± 0.25 inches (101.6 ± 6.35 mm). This change is reflected in the drawing package incorporated by reference by this final rule.

Due to the change in seat cushions from the ECE R.44 foam (which is 127 mm (5 inches) thick) to the NHTSA-Woodbridge cushion (which is 101.6 mm (4 inches) thick), NHTSA modified the SISA to account for changes to the seat cushion height. Using a thinner seat cushion lowered the position of the installed CRS on the seat assembly with respect to the door and armrest height, so the agency lowered the position of the door and armrest by about 25.4 mm (one inch) so that their relative position with respect to the installed CRS in the seat assembly are the same as that in the 2014 proposal (which is representative of the current vehicle fleet). This is discussed further in the section below on the SISA's door and armrest thickness and stiffness.

ii. Lower Anchorages and top tether anchorages of the CRAS

FMVSS No. 213 currently requires CRSs to be capable of being secured to a vehicle seat with the child restraint anchorage system (CRAS), and to meet the frontal crash requirements of the standard when using the CRAS. A CRAS consists of two lower anchorages and one upper tether anchorage. Each lower anchorage includes a rigid round rod or "bar" onto which a hook, a jaw-like buckle or other connector can be snapped. The bars are located at the intersection of the vehicle seat cushion and seat back. The upper tether anchorage is a ring-like object to which the upper tether of a CRS can be attached. (FMVSS No. 213 also requires that CRSs must be capable of being secured to a vehicle seat using the vehicle's seat belt system.)

NHTSA proposed that CRSs covered in the proposal, other than belt-positioning seats, meet the side impact performance requirements when attached to the SISA with the lower attachments of the CRAS. NHTSA also proposed that forward-facing CRSs supplied with a top tether may have that top tether attached during testing if the written instructions accompanying the CRS instruct owners to attach the top tether when using the restraint. As discussed further in a section below, NHTSA has adopted the above provisions in the test procedure for this final

rule.[144] This section discusses the proposed specifications for the CRAS lower anchorages and top tether anchorages on the SISA, comments received, and the final specification of the anchorages.

NHTSA proposed that the SISA be equipped with 2 inches (50.8 mm) wide CRAS lower anchorages that were symmetrically located on either side of the centerline of the simulated "outboard seating position" of the SISA seat. NHTSA proposed that the top tether anchorage be located on the lower rear frame of the seat, similar to the typical location of a tether anchorage in captain's seats in minivans. The exact locations of the proposed CRAS lower anchorages and tether anchorages were included in drawings posted to the docket for the NPRM.

Comments Received

UMTRI commented that the width of the lower anchor bars on the buck appeared to be 2 inches, rather than the 1-inch minimum required in FMVSS No. 225, "Child restraint anchorage systems," and most commonly used by vehicle manufacturers. UMTRI noted that in the NPRM, NHTSA stated that a European side impact test method was not suitable for testing U.S. products because it allows the connectors to slide. The commenter believed use of a 2-inch wide anchor rather than a 1-inch wide anchor may have the same effect and be unrealistic relative to the U.S. market.

MGA provided comments identifying potential interference of the SISA intruding door with the anchorage locations. First, MGA identified that because the lower anchor assembly protrudes through the seat bight, it was found to contact some CRS bases during their testing. In addition, MGA stated that the lower anchor assembly interferes with both the corner of the door fixture and the bottom of the seat cushion. MGA suggested that if the NPRM specifications for lower anchor location were desirable, the cushion foam design could be adjusted to accommodate the anchor, or the designed cutout in the seat foam could be made smaller and still

[144] NHTSA has also adopted a requirement that CRSs be tested with a Type 2 seat belt (lap and shoulder belt) with the child restraint system's top tether attached, if provided.

provide clearance for the anchor assembly. MGA believed that a smaller cutout would provide the benefit of a larger area for the CRS to sit during the test.

Agency Response

Modifications to the SISA have resulted in some changes to the lower anchorages. First, in response to MGA's comment, NHTSA updated the lower anchor location and cushion design and specifications to eliminate the lower anchor interference with CRS bases, corner of the door fixture, and seat foam. NHTSA also eliminated the foam cutouts, as discussed further below. In making these modifications, NHTSA also made the SISA lower anchorage locations consistent, as practically possible, with the lower anchorage locations in the proposed standard seat assembly of the frontal impact sled test. In addition, NHTSA decreased the anchorage width to 1.5 inches (38.1 mm). This is wider than those generally found in vehicles, but is within the 60-mm maximum allowable anchorage width specified in FMVSS No. 225. Because the standard seat assembly is used repeatedly and the anchorages will be subjected to a crash environment repeatedly, the new lower anchorages were made more robust than the anchorages in a vehicle, and designed in a way that allows easy replacement when the anchorages are deformed.

In response to UMTRI, while these wider anchorages may allow some movement of the CRS on the sliding seat assembly during the impact, the movement is slight and nowhere comparable to the European sliding anchors that allow 200-250 mm (7.87-9.84 inches) of movement. NHTSA has not measured the displacement of the CRS on the seat assembly during the impact event; however, in the 2014 NPRM the agency compared the dummy kinematics and injury measures in the side impact sled test to that in a vehicle side impact test and found them to be similar. NHTSA believes the effect of this sliding due to the length of the anchorage is minimal.

Comments Received

SRN requested that the proposed tether anchor location be further reviewed because a tether anchor located lower on the back of the seat has been shown to be less effective in far side

impact testing.[145] SRN argued that using a high tether anchor position on the proposed SISA would have an additional benefit even if it were not required for compliance in near side crashes. SRN stated that this would simplify the process for manufacturers to conduct voluntary center and far-side impact testing using a SISA configuration that more closely resembles the real world. Similarly, UMTRI questioned why the top tether location on the SISA was located on the lower seat back, instead of on a location representing the rear filler panel, as with the FMVSS No. 213 frontal impact standard seat assembly. UMTRI also argued that top tether anchorages located on the rear filler panel is more commonly found in vehicles. MGA commented that the tether placement for FMVSS No. 213a is located in a position that most closely resembles the floor of a vehicle, while the tether anchor location for current FMVSS No. 213 is in a location that most closely resembles a top shelf. MGA stated that while tether placement differs in all vehicle makes and models, FMVSS No. 213 and 213a should have similar locations for the tethers.

Agency Response

This final rule adopts the proposed location of the tether anchorage. As discussed above, the SISA tether anchorage is located on the lower rear frame of the seat and is similar to the typical location of a tether anchorage in captains' seats in minivans. The 2012 Vehicle Rear Seat Study found that 45% of the tether anchors were found on the rear shelf location, 40% were found on the seat back, 10% were located on the roof, and 5% in other locations. While a tether anchorage on the rear shelf was found more frequently in the vehicle survey, the agency decided to locate it on the seat back for several reasons. First, NHTSA considered that tether use had no substantive effect on CRS performance in the near-side impact test, because the simulated door impacts the CRS before the tether has significant engagement.[146] Further, a longer distance to

---

[145] Klinich et al. "Kinematics of the Q3s ATD in a Child Restraint under Far-Side Impact Loading, Paper #05-0262.
[146] While there may be no effect of tether use and/or tether anchorage position in a near side impact, use of a tether may improve the repeatability of the test. Also, there may be some effect of tether use in center and far-side impact environments, which would be relevant to researchers conducting center and/or far-side impact testing. Such testing would likely involve changing the SISA and door assembly to resemble a center/far-side environment, and adapting

the tether anchorage (as found in a seat back tether anchorage position compared to one located in the rear shelf) in a frontal test may result overall in a more stringent test as the tether may experience more webbing elongations when attached to the seat back vs. the rear shelf. Also, NHTSA is interested in keeping the frontal and side impact standard seat assemblies as similar as possible, and agrees with MGA that the FMVSS No. 213 and 213a seat assemblies have similar locations for the tethers. Therefore, the agency decided to keep the tether anchorage locations in a seat back position in both seat assemblies.

The lower anchorage locations from the 2012 Vehicle Rear Seat Survey, the proposed child restraint anchorage locations to the frontal impact test seat assembly,[147] and the updated side impact assembly are shown in Table 16.

Table 16. Lower Anchors and Tether Anchor Locations from (1) the 24 Vehicle Survey, (2) the Proposed FMVSS No. 213 Frontal Impact Sled Test Standard Seat Assembly, and (3) the Final Side Impact Seat Assembly Configuration. (All Measurements are in Millimeters from Point A[148] of the Seat Geometry Measuring Fixture (SGMF)).

		Average from Vehicle Survey	Proposed Frontal Test Seat Assembly (2020)	Final Side Test Seat Assembly
Lower Anchors	Aft	100 ± 21	58	60
	Lateral	137 ± 29	140	141
	Vertical (-) Below point A	-12 ± 24	-38	-39
Tether Anchors (Seat Back Position)	Aft	280 ± 88	330	324
	Lateral	0 ± 44	0	5
	Vertical (-) Below point A	140 ± 281	133	133

the SISA in such a manner would require substantial changes to the sliding seat (i.e. making it wider to represent the center and/or the far-seating positions in a rear seat) and/or to the door assembly to position the door intrusion at an appropriate distance for a center/far-side impact environment. Entities engaged in such modifications can also consider changing the location of the tether as part of their evaluation.

[147] 85 FR 69388, *supra*.

[148] The 2012 Vehicle Rear Seat Study measured the vehicles' seat geometry and anchorage locations using a seat geometry measuring fixture (SGMF). The SGMF consisted of two wood blocks (600 mm x 88 mm x 38 mm) and a 76 mm (3 inches) hinge. To make the rear seat geometry measurements, the SGMF was positioned on the centerline of each rear seat position. Point A, which corresponds to the hinge location of the SGMF, was the reference point for all measurements.

UMTRI commented that to allow access to lower anchors, there is a large gap between the bottom of the seatback foam and the top of the seat cushion foam on the seat buck. UMTRI explained that when used with some rear-facing child restraints, the profile of the restraint surface that rests against the seatback may slip into the gap in an unrealistic manner. UMTRI added that in the ECE buck, there is space between the two foam segments, but the seatback foam is angled so there is some foam in the gap. UMTRI stated that this provides a more realistic seatback contour than the proposed SISA buck design.

By way of background, NHTSA designed the side and frontal sled test seat assemblies taking into consideration the current difficulties to install and to measure installation tensions (seat belt and lower anchor). The updated design has proven to allow for easier installation in the buck and in some cases reduced the difficulty of measuring installation tension. During extensive side and frontal impact testing with the updated seat assemblies that have a gap in the seat bight (between the seat back and seat cushion foam), the agency has not seen any issues in CRS placement or during testing as mentioned by UMTRI. Among more than 200 tests conducted on the side impact sled system with rear-facing and forward-facing CRSs, NHTSA did not experience any issues with the seat bight gap. Accordingly, this final rule does not make the requested change.

2. Door characteristics

i. Beltline height

NHTSA proposed a beltline (window sill) height of 500 mm (19.6 inches) for the SISA, based on a survey of 24 vehicles. Although the proposed beltline height (500 mm) was slightly higher than the average (494 mm) and median (489 mm) beltline heights of the surveyed vehicles, HIC values were generally higher at the higher beltline height. NHTSA proposed the higher value to ensure that the side impact test was sufficiently stringent to account for vehicle beltlines higher than the average value. Child restraint systems meeting the HIC15 requirement when tested against the 500 mm beltline will likely provide sufficient crash protection in vehicles

with a lower beltline, but the opposite may not be valid. CRSs tested against a lower belt line might not adequately protect children in vehicles with the higher (500 mm) beltline design.

Comment Received

CU stated that the NPRM's fleet study of seats seemed to have been conducted at the 479 mm (18.8 inches) height and that even at that lower height, 7 of 12 forward-facing CRSs had HIC15 values in excess of the proposed 570 limit. CU stated, "Though the five seats with the lower HIC15 had a notable margin between their values and the 570 limit, it may be an expectation that at the higher beltline height more CRSs would approach or exceed that limit." CU added that the higher beltline may also produce a larger differential when compared to the performance of seats in the sled/vehicle test comparison.

Agency Response

Contrary to CU's understanding, our fleet testing of forward-facing CRSs discussed in the NPRM[149] were performed at the higher beltline height (500 mm or 19.6 inches), not the lower beltline height (479 mm or 18.8 inches) that was first used during development. Tested against the 500 mm beltline height, the fleet test results of forward-facing CRSs with the Q3s dummy showed that 7 out of 12 CRSs exceeded HIC15 injury limits and that 3 out 12 tests resulted in chest deflection exceeding the proposed limit (23 mm). Fleet tests of rear-facing CRSs tested with the Q3s showed that 3 out of 5 exceeded HIC15 injury limits and 2 out of 5 exceed chest deflection injury limits. For the 5 rear-facing CRSs tested, the results of the fleet tests showed that the Q3s measured HIC15 greater than 570 in 3 of the 5 rear-facing CRSs tested, and chest deflection greater than 23 mm in 2 of the 5 tests. The Q3s measured both HIC15 greater than 570 and chest deflection greater than 23 mm in 1 of the 5 rear-facing CRSs tested.

Tests with the 12-month-old CRABI dummy in rear-facing CRSs showed that the different beltline heights did not affect dummy responses. NHTSA believes this was due to the fact that most rear-facing CRSs designed for smaller children position the head lower (mostly

---

[149] *Id*. at 4593.

below the beltline) and therefore the increased height (at 500 mm or 19.6 inches) did not affect the outcome. For this reason, fleet testing with the 12-month-old CRABI dummy in rear-facing CRSs did include tests done at 500 mm and at 479 mm. Results of rear-facing CRSs using the 12-month-old CRABI dummy showed that only 1 out of 12 models had head to door contact. NHTSA believes the tests selected for the fleet testing and cost benefit analysis in the NPRM were appropriate and accounted for the increased stringency of the higher beltline. Accordingly, NHTSA is not making any changes to the SISA beltline height from that proposed in the NPRM.

ii. Door and armrest thickness and stiffness

NHTSA proposed that the door panel/armrest configuration for the SISA would consist of 51 mm (2 inches) "average" stiffness foam padding (Dow Ethafoam 220) on the door and a 64 mm (2.5 inches) "stiff" foam (United Foam #4) for the armrest. NHTSA determined that this door panel/armrest configuration had similar characteristics to those observed in Free Motion Headform (FMH) impact testing of eight vehicle doors. Those tests are described in detail in NHTSA's 2013 report, Child Restraint Side Impact Test Procedure Development.[150] The proposed armrest thickness also fell within the range of vehicle armrests measured in the 2012 Vehicle Rear Seat Study.

In addition to the representativeness of that door panel/armrest configuration of average rear seat characteristics, NHTSA stated that the proposed door padding (Ethafoam 220) was of lower cost compared to the other foams, was relatively easy to obtain commercially, and was relatively fungible, in that other materials with similar physical properties could easily be used in its place. NHTSA also cited to results of its sensitivity analyses that showed door stiffness had little effect on dummy performance.[151]

Discussion of Comments

---

[150] Sullivan, L., Louden, A., Echemendia, C., "Child Restraint Side Impact Test Procedure Development" (December 2013), available at Docket No. NHTSA-2014-0012-0002 [hereinafter Sullivan et al. (2013)].
[151] Sullivan et al. (2011).

CU commented that the FMVSS No. 201 test procedure that NHTSA used as a basis for determining average door and armrest stiffness was also utilized by CU in its revised CRS testing protocol, and therefore CU supported that aspect of the NPRM. ARCCA commented that while it did not have data to confirm or deny the appropriateness of the door/armrest configuration, it was unaware of any rear door configuration with the level of padding specified for the proposed SISA. ARCCA stated that, accordingly, the HIC values acquired from head to door impact would likely underpredict the severity of the head impact.

NHTSA disagrees with ARCCA. The stiffness of the simulated door in the SISA is representative of the stiffness found in vehicles, which NHTSA determined using the FMH testing described above. The stiffness of the 51 mm thick door padding includes the combined stiffness of the door assembly (inner and outer panel of the door) and the interior door padding. The relevant factor for the test is door stiffness and not the thickness of the door padding. Details of the development of the door characteristics can be found in the "Child Restraint Side Impact Test Procedure Development" technical report.[152]

Both JPMA and MGA noted a discrepancy between the NPRM specification for door foam thickness (51 mm) and the drawing package specifications (55 mm). JPMA stated that this difference in foam thickness is significant because "the NPRM includes set-up distances from the face of the door panel to the face of honeycomb material and from the face of the honeycomb material to the centerline of the sliding seat [sic]." JPMA explained that the thickness of the foam is thus an important part of these set-up relationships and needs to be the same in the final rule and the drawing package to help ensure consistent test results between test facilities. MGA stated that it believed the error was on the part of the drawings, as 55 mm (2.2 inches) foam is not commonly available.

NHTSA agrees with MGA that there are inconsistencies in the door foam thickness specification between the NPRM and the drawing package. The door foam was procured as a 2-

[152] Sullivan et al. (2013).

inch nominal thickness foam plank. According to the foam manufacturer's terminology,[153] an X-inch nominal foam thickness means that the foam plank is gauged at a desired thickness of X + ¼ inches. Therefore, a 2-inch nominal thickness foam plank has a thickness of 57 mm (2.25 inches). Accordingly, NHTSA has changed the door foam thickness measurements in Drawing 2921-501 from 55 mm (2.2 inches) to 57 mm (2.25 inches). The specified foam, with a thickness of 57 mm (corresponding to a 2-inch nominal foam thickness) is commonly available.

Graco made several recommendations relating to the door foam's characteristics over time and extended use. The commenter recommended replacement of the door foam only after significant structural damage. It recommended that NHTSA provide a standardized method for measuring the compression properties of the door foam. Graco provided developmental test results showing that maximum HIC15 and chest deflection results occur at the time of contact with the door structure.[154] Graco suggested that NHTSA should confirm that performance after extended use does not change results. Graco explained that currently the foam types are described as "Soft" (United Foam # 2), "average" (Dow Ethafoam 220), and "stiff" (United Foam # 4) foam. Graco suggested that, if these descriptions can also include a method for confirming compression properties after extended use, crash test facilities can confirm that injury metric results are not affected by changes in foam properties.

MGA reported that they did not replace the door and armrest foam between tests (approximately 40 tests). MGA used a single piece for the door and two pieces for the armrest attached with spray adhesive. MGA reported that the foam assembly did not show any physical degradation nor change in thickness during their test series.

During NHTSA's research testing, the door foam was reused for 2 to 3 tests as no extensive damage was seen during initial tests, while the armrest foams were used only once as they presented indentations from the impact of a single test. Since there is no method to retest

---

[153] Link to foam manufacturer's terminology: https://www.customfoaminc.com/CustomFoamProductsSpecSheet.pdf
[154] NHTSA-2014-0012-0042, at pg. 9.

for the compression properties of the door and armrest foams after use, NHTSA frequently replaces these foams.[155] How frequently NHTSA will replace these foams in its compliance testing program will be indicated in NHTSA's compliance test procedure for FMVSS No. 213a that will be included on NHTSA's website.[156]

3. Honeycomb

As discussed above, the purpose of honeycomb on the door structure is to contact the sliding seat in a way that the desired sliding seat acceleration is achieved. NHTSA included honeycomb specifications in the parts list drawings docketed with the NPRM. The drawing specified Aluminum – 6061 (AL 6061) as the material used, the honeycomb cell size, foil gage, and density, and noted that an equivalent density could be used. The drawings also specified the dimensions of the honeycomb used in the test sled.

JPMA was concerned that the costs of running the proposed side impact test would be higher than running an FMVSS No. 213 frontal impact test because the honeycomb material could only be obtained from one supplier and that the limited availability drove up demand and price. JPMA added that the honeycomb material could only be used once and then must be discarded. JPMA recommended NHTSA specify the type of material that could be used and the amount of pre-crush that should be done to allow for technological advances in this area without restricting potential suppliers.

JPMA also commented that testing by its members using honeycomb material with and without pre-crush confirmed that the performance of the honeycomb varied. JPMA added that the pre-crushed material produced lower peak Gs and a lengthened, smoother deceleration pulse. JPMA believed that even if the final rule specified pre-crushed honeycomb, it also must include

---

[155] The research test procedure developed at VRTC specifies use of a new foam for each test. This test procedure is in the following report in the docket of this final rule: Louden, A., & Wietholter, K. (March 2022). *FMVSS No. 213 side impact test evaluation and revision* (Report No. DOT HS 812 791). Washington, DC: National Highway Traffic Safety Administration (hereinafter Louden & Wietholter (20)).

[156] The NHTSA Office of Vehicle Safety Compliance FMVSS No. 213a side impact test procedure can be found at: https://www.nhtsa.gov/vehicle-manufacturers/test-procedures.

parameters for controlling the amount of crush to be obtained and whether the pre-crushed surface of the honeycomb material should face the sliding seat.

Agency Response

As discussed above, for the final rule's test procedure, NHTSA made changes to the sliding seat structure to reduce vibrations that were affecting accelerometer readings and to align the seat specifications with that of the proposed FMVSS No. 213 frontal impact test.[157] These modifications added weight to the sliding seat structure, and the added weight of the seat made the sliding seat acceleration pulse fall to the lower bound of the proposed acceleration corridor of the sliding seat assembly. Therefore, the specifications for the honeycomb needed revisions to obtain the average acceleration pulse in the sled tests presented in the NPRM.

The agency worked with Plascore, the manufacturer of the honeycomb used in the proposed SISA, to select a honeycomb for testing purposes that would modify the sliding seat response and bring the acceleration pulse within the proposed corridor. NHTSA also worked to develop appropriate specifications for the selected honeycomb material. The final honeycomb specifications differ in cell size and crush strength from the proposed specifications. The final honeycomb specifications are detailed in a report entitled, "FMVSS No. 213 Side Impact Test Evaluation and Revision,"[158] in addition to the drawing package accompanying this final rule.

In response to JPMA's concerns that the honeycomb could only be obtained from one supplier, while the agency did not test with honeycomb from different sources, the agency notes that Cellbond is another manufacturer that can provide similar honeycomb material. In addition, if manufacturers are concerned about the cost of replacing the honeycomb, they can develop their own decelerating system (e.g. a hydraulic decelerator) that provides a sliding seat acceleration profile within the required acceleration corridor. The honeycomb specification is provided to advise manufacturers how NHTSA's compliance tests will be performed, but

---

[157] 85 FR 69388, *supra*.
[158] Louden & Wietholter (2022).

manufacturers are not required to use the procedures. NHTSA also notes that the size and crush strength of the honeycomb can help tune the system to achieve the desired accelerations within the corridor.[159]

The agency also tested some pre-crushed honeycomb but found, as JPMA had noted in its comments regarding members' testing, that the acceleration pulse peak was reduced and the length of the pulse extended outside the proposed acceleration corridor.[160] As NHTSA found that it was possible to obtain an acceleration pulse of the sliding seat that was within the specified corridors using honeycomb that was not pre-crushed, NHTSA did not further consider the use of the pre-crushed honeycomb. However, as discussed above, the standard adopted by this final rule does not prohibit the use of pre-crushed honeycomb. Test facilities and manufacturers may choose any type of honeycomb as long as the sliding seat acceleration pulse is within the specified corridors. They may even use an entirely different apparatus (e.g., a hydraulic decelerator, which does not require honeycomb) as long as their child restraints meet FMVSS No. 213a when tested by NHTSA in the manner specified in the standard.

4. SISA technical drawings

The NPRM proposed to incorporate by reference a set of technical drawings of the SISA into FMVSS No. 213a. The technical drawings were placed in the docket. Several commenters provided feedback on the drawings, pointing out errors such as minor discrepancies between the drawing and the proposed regulatory text, places where clarity was requested, and suggestions for additional drawings or parts specifications for the SISA. NHTSA has provided additional explanation in the discussion below, and in some cases, has made minor corrections or revisions to the drawings to correct or clarify the material. These changes simply improved the quality of the drawings and will have no effect on the outcomes of the test.

Corrections and revisions to the technical drawings

---

[159] *See* Louden & Wietholter (2022). *See also* Brelin-Fornari, J., "Final Report on CRS Side Impact Study of Repeatability and Reproducibility using a Deceleration Sled," July 2017.
[160] Louden & Wietholter (2022).

MGA suggested that the agency incorporate drawings or reference geometry for a D-ring and Type 2 (3 point) seat belt anchors. MGA stated that currently different test facilities use different methods for locating and attaching belt anchors, which the commenter believes has been a source of concern with FMVSS No. 213. MGA stated that ECE R. 44 Annex 13, p. 149-151 (dated February 2008), specifies geometry and may be helpful as a reference as the proposed SISA has similar geometry to the ECE R44 seat assembly. In response, NHTSA has included drawings for the D-ring and Type 2 belt anchors in the final drawing package.

MGA suggested removing the CRAS lower anchorages and belt anchor assembly from inside the bottom cushion to allow a complete bottom cushion with no cutouts. MGA stated that this would provide the ability to have a more consistent and representative seating surface. In response, as discussed above, the final foam design does not have cutouts, and the anchorages location and design have been updated to be more accessible and durable. The specific change MGA suggested has not been made.

MGA commented that although load legs are not currently recognized in FMVSS No. 213, some sort of platform in a specified location on the SISA may help aid their introduction into FMVSS No. 213 in the future. Relatedly, CU commented that during its evaluation of infant seat models equipped with load legs, there was some interaction between the load leg and the mounting hardware on the sled "floor" as well as front camera hardware. CU suggested that elimination of hardware or test components in the area directly ahead of the test bench may be warranted in updates or final rule changes to limit possible interaction with the load leg of rear-facing seats.

In response, load legs cannot be used in the side impact configuration as the sliding seat is on rails connected to the base plate/floor. The floor does not move during the test as the seat assembly slides along the rails. Further, NHTSA will not use load legs in the FMVSS No. 213a compliance test. Under FMVSS No. 213a, a top tether will be attached (in forward-facing CRSs

that provide one), but supplementary devices will not be used.[161] If manufacturers want this option for testing CRSs for purposes other than compliance testing, they can design a SISA with a floor that can be used for supporting load legs. MGA suggested that NHTSA define the overall length of the equipment (base plate, rails, rail mounting plate) as a reference dimension. MGA stated that depending on the sled system, equipment, and input used, more or less ramp up room may be required to perform the test. MGA also stated that allowing additional length would provide the opportunity to test to more severe inputs. NHTSA declines to make this change. If manufacturers want to test at different settings, they can vary the rail length as convenient in their system.[162]

Regarding the bench seat panel assembly, MGA commented that the attachment method for holding the "Bench Seat Panel" and "Bench Seat Back Panel" (Drawings 2921-360 and 2921-380) to the "Bench Seat Assembly" (Drawing 2921-310) were not durable enough. MGA said that the attachment bolts thread into thin steel and stripped out very quickly, and that MGA accordingly replaced most of these fasteners with thru-bolts. MGA suggested thicker wall tubing, a captured nut, or other means for attaching to the bench (seat assembly). Updates to the seat assembly design make MGA's suggestions to drawings 2921-360 and 2921-380 moot as drawings 2921-360 and 2921-380 drawings were removed. Also, the seat back and seat pan design were changed in the updated 2921-310 drawings, making MGA suggestions no longer relevant.

Regarding the tether anchor mount, MGA commented that Drawing 2921-340, "Top Tether Anchor," has a single mounting bolt to attach the mount to the seat frame, which allows the tether anchor to rotate during testing. MGA suggested that it may be desirable to mount the

---

[161] This is consistent with the requirements of FMVSS No. 213. Load legs are not permitted to meet the minimum threshold requirements of FMVSS Nos. 213 and 213a because the agency is concerned that caregivers will not use the load leg. Manufacturers may provide a load leg to supplement performance beyond the threshold needed to meet the FMVSSs, but the CRS must meet the requirements of the FMVSSs without use of the load leg.

[162] As discussed below, NHTSA's drawing package contains drawings that are appropriate for an acceleration-type test. NHTSA did test on a deceleration-type sled in the Kettering study that used longer rails, because the deceleration-type sled needs a longer distance to ramp up to the desired speed.

tether anchor with a second bolt to prevent this pivot motion. NHTSA agrees and has modified the tether anchor design to prevent rotation and so it can be replaceable in case of bending during testing. The new tether anchor design consists of an easily replaceable bolt that goes through two small wings attached to the seat assembly, with two bolts to prevent rotation. The replaceable bolt serves as the tether anchor in the new design.

Regarding Drawings 2921-370 and 2921-390 "Bottom Seat Cushion Ass'y" and "Seat Back Cushion Ass'y," MGA stated these drawings are inconsistent on the width of the seating surface. The bottom cushion specifies a width of 695 mm (27.4 inches) while the back cushion specifies a width of 670 mm (26.4 inches). In response, NHTSA updated drawings 2921-370 "Seat Pan Cushion Ass'y" and 2921-390 "Seat Back Cushion Ass'y" and they are now the same dimensions 711 mm (28 inches) width.

Regarding Drawing 2921-321 "Bench Top Anchor Brace Plate," MGA commented that it believed this drawing is obsolete. NHTSA agrees and the brace plate has been eliminated from the drawings.

Regarding Drawing 2921-100 "Base Plate," MGA had four suggestions. First, change the M10 tapped holes for rail base plate mounting to M12. The through holes in rail mount plate (Drawing 2921-251) and end stop "Bumper Base" and "Bumper Base Extension" (Drawings 2921-411 and 2921-412) are 0.531 inches and 0.500 inches which are too big for an M10 bolt. Second, allow the option to use aluminum to reduce the weight of the setup. Third, remove thru holes for attaching to the VRTC sled; and fourth, make the overall rail length for reference only to allow changes for different sled facilities. In response, NHTSA switched the holes to M12; allowed the option to use aluminum to reduce the weight of the setup; and removed all extra thru holes. In regards to the last suggestion, the drawing package contains drawings for an acceleration-type sled test. If manufacturers want to test at different settings or use different

types of sled systems, they can vary the rail length as needed. The Kettering study[163] of a deceleration-type sled used longer rails than the drawings as the deceleration sled needs a longer distance to ramp up to the desired speed.

MGA stated Assembly 2921-210 "Impactor Stop Assembly," can be changed from referencing two bolt together weldments to a single weldment by changing (1) Assembly 2921-220 "Impactor Stop Frame Assembly" to remove holes in the plate for Drawing 2921-221 and eliminating items 2921-224, 2921-225, 2921-226; and (2) Assembly 2921-230, "Honeycomb Frame Assembly," by eliminating item 2921-231, extending item 2921-232 by 0.25 inches and extending item 2921-235 by 6 inches. In response, NHTSA removed the holes in plate for part 2921-221. Drawings 2921-(225-226) were removed. Drawing 2921-224 was not removed as it is referenced in the drawing package. Item 2921-231 was removed. The dimension was increased by 0.28 inches (rather than 0.25 inches as suggested) to correctly depict the length in drawing 2921-232 (from 136.5 mm or 5.38 inches to 143.7 mm or 5.66 inches). The dimension was extended in drawing 2921-235 by 6 inches, as suggested.

Regarding Drawing 2921-241-1 "Impactor Frame Tube 1," MGA suggesting changing the length of the frame tube from 30.80 inches to 29.50 inches to match the height of the impactor frame and to match part 2921-241-2. In response, NHTSA changed the length of the impactor frame tubes, to depict the correct length of 29.50 inches, as suggested. Drawing 2921-241-1 has been removed and replaced by -241-2.

Regarding Drawing 2921-251 "Rail Mtg. Plate," MGA suggesting changing the width from 5.91 inches to 6 inches, as a 6-inch plate is commonly available, and the change reduces machining processes. In response, NHTSA changed the width of the plate to 6 inches.

---

[163] Brelin-Fornarni, J., "Development of NHTSA's Side Impact Test Procedure for Child Restraint Systems Using a Deceleration Sled: Final Report, Part 1. April 2014. Link: https://www.nhtsa.gov/sites/nhtsa.dot.gov/files/811994-sideimpcttest-chrestraintdecelsled_pt1.pdf

Regarding Assembly 2921-311-9 "Bench Frame Tube #9 Assy.," MGA suggested removing notches and extra pieces as these were believed to be obsolete. NHTSA has removed Assembly 2921-311-9, so this suggestion is no longer applicable.

Regarding Drawing 2921-313 "Bench Bearing Support Plate," MGA had three suggestions: change overall length from 24.41 inches to 24.56 inches, as the current length does not fit the size of the SISA; change the width from 4.016 inches to 4.00 inches, as four-inch plates are readily available; and change slots to holes, if the purpose of slots is unnecessary. NHTSA agrees and has made these suggested changes.

Regarding Drawing 2921-314 "Bench Frame Center Stiffener Plate," MGA commented that this plate appeared to be obsolete, and recommended removal of the drawing. NHTSA did not remove the plate from the drawing package, because the plate is still in use. The stiffener plate helps overall buck durability.

Regarding Drawing 2921-322 "Bench Stop Plate," MGA suggested changing the plate with from 5.91 inches to 6 inches, as six-inch plates are readily available. MGA also questioned the purpose of holes in the plate, and requested the agency remove the holes if they were obsolete. In response, NHTSA changed the dimension of the plate in the drawing as suggested. The holes in the plate are necessary, as holes need to be present for the honeycomb to provide the correct response (air flow through the honeycomb) for correct deceleration.

Regarding Drawing 2921-331 "Light Trap Vane," MGA suggested removing the drawing from the package, as depending on the model of light trap used to measure velocity, different sized vanes or flags may be necessary. NHTSA agrees, and the drawing has been removed.

Regarding Drawings 2921-372 "Seat Bottom Cushion" and 2921-392 "Seat Back Cushion," MGA had three comments: first, MGA noted that the cutouts to allow clearance for the belt anchors were not the same size for the left and right side, and asked if this was intentional (as drawings 2921-371-1 "Seat Bottom Cushion Mtg. Plate" and 2921-360 "Bench Seat Panel" have the same size cutouts for the left and right side). Next, MGA stated the

location of the cutouts does not match the location on Drawing 2921-371-1 "Seat Bottom Cushion Mtg. Plate" and the misalignment can be seen in assembly 2921-370 "Seat Bottom Cushion Assy." Finally, MGA stated that the specified material has proven difficult, if not impossible to obtain. MGA suggested NHTSA specify a more commonly available polyurethane foam block with a specified density and force/deflection. In response, as discussed above, NHTSA modified the SISA so that the final foam design does not have cutouts. In addition, as discussed above, NHTSA has identified several manufacturers that could produce the specified foam. This is discussed in more detail in the Foam Feasibility Study included in the docket with this final rule.[164]

Regarding Drawings 2921-373 "Bottom Seat Cushion Cover" and 2921-393 "Seat Back Cushion Cover," MGA suggested NHTSA specify a more commonly available material such as "cotton duck," which can be purchased from a variety of vendors. MGA also suggested NHTSA specify a detailed method of wrapping and attaching the cover material. In response, NHTSA added details for the cover material to the drawing package. The current wrapping method is specified in the report, "FMVSS No. 213 Side Impact Test Evaluation and Revision"[165] and will be available in the compliance test procedure (TP) placed on NHTSA's website.

Regarding Drawing 2921-391-1 "Seat Back Cushion Mtg. Plate," MGA suggested reducing the thru hole size from 0.328 inches to 0.281 inches for specified 1/4-28 hardware. In response, NHTSA found the suggested 0.281 inch through hole was too small to slide down the bolts and lay flush with the seat back pan. Accordingly, the dimension was changed to 0.34 inch, which corresponds to a 11/32 standard bit size.

Regarding Drawing 2921-396 "Rail Bearing Mount Plate," MGA suggested changing the overall length from 30.98 inches to 31 inches as it currently does not match Drawing 2921-397, "Anti-Rebound Slider Base," which attaches to it. MGA also suggested changing the thickness

---

[164] "Foam Feasibility Study by National Center for Manufacturing Sciences" (NHTSA, June 2018). This document is in the docket for this final rule.
[165] Louden & Wietholter (2022).

from 0.35 inch to 0.375 inch (3/8 inch), as a 3/8 inch plate is referenced as the material, and reducing the thickness to 0.35 inch through a machining process is very time consuming and costly. In response, NHTSA changed the overall length dimension to 31 inches as suggested, and the thickness was updated to 3/8 inch in the drawing package.

Regarding Drawing 2921-404, "Anti-Rebound Fixture Stop Plate," MGA stated that, currently, the plate has a taper and is not a constant thickness, and questioned whether this was intentional or a drawing error. MGA stated that if this is an error, it should be corrected to a constant 0.75 inch thickness. MGA also stated that the Countersink is currently drawn for ½ inch hardware, but 5/8 inch hardware is specified in drawing 2921-400, "Anti-Rebound Fixture Ass'y." In response, NHTSA changed the hanged plate thickness to a constant 0.75 inch, as suggested. The drawings were also changed to have a 5/8 inch countersink.

Regarding Drawing 2921-411 "Bumper Base," MGA stated that the thru holes for attaching to the base plate are not dimensioned in the drawings, and should be to make the drawing fully defined. In response, NHTSA added dimensions so that the drawing is fully defined.

Regarding Drawing 2921-501 "Impactor Door Foam," MGA had three comments: first, the thickness is drawn to 2.2 inches but in the proposed regulatory text a thickness of 2 inches is referenced; second, the drawing is not fully constrained, as the two angles are not dimensioned; and third, that the geometry does not match the geometry of Drawing 2921-243, "Impactor Door Plate," to which this piece attaches. In response, NHTSA changed the thickness of the door foam to 2N (Nominal) and dimensions were added to be fully constrained. NHTSA also changed the drawing so that the geometries of the door plate and door foam match.

Regarding Drawing 2921-600 "Honeycomb," MGA suggested removing the overall dimensions from the drawing and making it for reference only. MGA stated that different pieces of equipment may behave differently and need to be tuned through the sizing of the honeycomb material. MGA also suggested that NHTSA specify if the honeycomb is to be "pre-crushed" as

is common with testing involving aluminum honeycomb. In response, NHTSA did not make any changes to the drawing, as honeycomb is in the optional section of the drawings so that test facilities can use the honeycomb material and cut it to different sizes if necessary. NHTSA did not indicate pre-crush, as discussed above.

Regarding Assembly 2921-700 "Light Trap Assembly," MGA suggested removing drawings 2921-700, 2921-701, 2921-702. MGA stated that depending on the model of the light trap being used to record velocity, different sized and shaped attachments may be necessary. In response, NHTSA removed Drawings 2921-(700-702). The test procedure will not be using a light trap to determine closing speed, and therefore the drawings are not needed.

5. Other testing issues

i. Right-side impacts

MGA also commented that there is no ability to perform FMVSS No. 213a testing on the right side of the CRS. MGA stated that wording in the proposed rule dictates the need to perform left- and right-side impacts but the SISA drawing package is not reversible and cannot be used for right-side impacts. MGA recognized modifying the equipment would require significant redesign.

MGA is correct that the SISA can only test left-side impacts. A SISA that would allow both impact directions would have to be designed, and such redesign would likely affect the overall weight of the sliding seat, and, therefore, the specifications for the rest of the settings (i.e., honeycomb, input acceleration and velocity). Another option would be to specify a mirror-image SISA to test in a right-side impact configuration, but developing such a sled assembly would also take time and resources and involve doubled testing costs. NHTSA has decided that both approaches are unnecessary at this juncture. While the standard only specifies a test simulating a left-side impact, as a practical matter it is reasonable to conclude that manufacturers will apply to the right side the same countermeasures that protect against left side impacts. Because of market forces (consumers will likely prefer CRSs that provide both left- and right-

side protection over ones that provide only left-side protection), manufacturer diligence, liability concerns and the practicability of countermeasure design, NHTSA believes manufacturers will be motivated to apply the countermeasures developed for the left side to both sides of the CRS. The agency also plans to query CRS manufacturers to see if they have designed their CRSs so that the child restraints perform equally in a right-side impact as they do in the left-side test to keep informed of industry practices in this area.

ii. Sliding seat bearings

JPMA commented that several smaller JPMA members were concerned with the cost of the sliding seat bearings for the FMVSS No. 213a test set-up. JPMA explained that based on observations during side impact testing, such bearings will only last 30 to 40 runs per set and cost $750 to replace. JPMA added that the bearings wear quickly in the proposed side impact test due to lateral load imposed by the difference in the travel angle of the sled and the sliding seat and the lateral and vertical loads during the impact. JPMA explained that as the bearings wear down, they create drag, which will eventually cause the sliding seat pulse to exceed specifications. JPMA added that during the wearing process, additional burden on the already impaired bearings causes them to wear out even faster, and thereby necessitating frequent replacement.

JPMA suggested that one possible solution would be to adjust the drawing package, which specifies that flange bearings be used. JPMA stated its belief that the deletion of that requirement would allow each test facility and/or manufacturer the opportunity to determine what type of bearings work best with their test fixtures.

NHTSA concurs with the suggestion. The drawings are modified to specify the bearings as “THK Linear Motion Guide Model HSR30-B-2-UU-M+1315-M-II or equivalent” to allow compliance test facilities to use different brand of bearings. VRTC measured the drag pull/push force during testing to evaluate whether the bearings were causing excessive friction as they

were wearing down (excessive friction is an indication that they may need replacement.).[166] The data indicated that the drag force did not increase appreciably as the bearings were wearing down, and VRTC only replaced the bearings if, after higher than normal push/pull forces were observed, the push/pull forces did not decrease after greasing the bearings, or after additional troubleshooting. Per this methodology, VRTC replaced the bearings after approximately every 80 tests. NHTSA believes replacing the bearings every 80 to 100 tests is not an unreasonable cost burden. Further, NHTSA estimates the cost of a bearing set is $440 ($110 each), which is less than what JPMA estimated.

iii. Seat belt interference

Graco commented that, during the time of engagement between the aluminum honeycomb and the impact surface of the sliding seat, the Type 2 shoulder belt is engaged with the door structure, which can result in a different acceleration pulse.

As discussed further in the section on Repeatability and Reproducibility below, NHTSA's testing with the CRS installed using the Type 2 (lap/shoulder belt) showed no interference of the shoulder portion of the Type 2 belt with the door.[167] In testing, the shoulder portion of the Type 2 belt slides behind the door during contact of the sliding seat with the door. This interaction did not affect the sliding seat acceleration pulse or any of the performance measures.

c. Sled kinematic parameters

1. General

In designing FMVSS No. 213a, NHTSA examined data from FMVSS No. 214 MDB compliance tests to identify kinematic characteristics of a side impact crash, so that the sled test would be representative of the crash experience of a child restrained in a CRS in the rear seat.

---

[166] *See* Louden & Wietholter (2022) for documentation on drag pull/push force which may predict if bearings have high friction. The increase in pull/push force may also be attributed to other causes explained in the report.
[167] Figures illustrating the Type 2 seat belt testing showing no interference with the door are docketed with this final rule.

NHTSA identified the following sled kinematic parameters to replicate in the FMVSS No. 213a test: (1) the acceleration profile of the sliding seat (representing the struck vehicle acceleration); (2) the door velocity at time of contact with the sliding seat (this represents the struck vehicle door velocity); and (3) the impact angle of the door with the sliding seat (to replicate the longitudinal component of the direction of force).

NHTSA determined that a small passenger vehicle in an FMVSS No. 214 MDB crash test experiences a lateral change in velocity of about 30 km/h (18.6 mph). This change in velocity is greater than 92 percent of near-side impact real-world crashes involving restrained children 0- to 12-years-old in light vehicles, as estimated by NHTSA using data files from the National Automotive Sampling System Crashworthiness Data System (NASS-CDS) (now known as the Crash Investigation Sampling System). To ensure that the side impact test would be sufficiently stringent to account for the greater acceleration and intrusion experienced by smaller vehicles, the agency focused on the crash characteristics of small passenger vehicles in FMVSS No. 214 side MDB tests, as opposed to the average estimates from all vehicles.

As discussed further below, NHTSA proposed a test procedure that specified the following parameters:

- A trapezoidal sliding seat acceleration profile (representing the struck vehicle acceleration) based on an analysis of ten small vehicle FMVSS No. 214 tests.
- A sled buck impact angle of 10 degrees. NHTSA selected this impact angle based on two factors: (1) the same small vehicle FMVSS No. 214 MDB tests; and (2) a series of tests within a range of 0 to 20 degrees (at 0, 10, 15, and 20 degrees) to evaluate the effect of the test buck's impact angle on dummy kinematics and injury responses. Separate tests conducted to compare the Takata-based test to four MDB crash tests also found that a 10-degree impact angle on the sled test

produced dummy responses closer to those measured by the ATD in the same CRS in the four MDB crash tests than the other impact angles.[168]

- A door velocity (representing the struck vehicle door velocity) of 31 km/h (19.3 mph) prior to the honeycomb contacting the sliding seat structure, based on the FMVSS No. 214 tests of small vehicles with accelerometers installed on the doors (four out of the ten tested vehicles).

NHTSA sought comment on a relative door velocity profile. The agency sought to avoid over-specifying the test environment, but stated that a door velocity profile, with respect to the sliding seat, may be desirable to improve the reproducibility of the interaction of the intruding door with the child restraint in different types of sled systems. Accordingly, NHTSA sought comment on the need for specifying a relative door velocity profile to improve reproducibility of the test procedure. NHTSA stated that, depending on whether the agency received information sufficiently supporting such a velocity profile, one could be included in the final rule.

Comments Received (High View)

There was overarching support for the proposed sled test procedure. Mr. Hauschild agreed that the NHTSA test procedure should account for the struck side door velocity, including the struck vehicle acceleration profile, and the impact angle to replicate a side impact crash. He also stated that testing should be done with and without the intruding door due to the complexities of the side impact crash event. Dorel commented in agreement with the test procedure's intruding door approach, stating that it does not support a test procedure that does not incorporate an intruding door. Dorel concluded that there is no reason to develop, or require a fixed door procedure that has been shown to be unrepresentative of injury mechanisms like intrusion.

As part of its response to NHTSA's request for comment regarding the need to specify a relative velocity profile, Graco requested NHTSA provide data demonstrating that a CRS tested

[168] Sullivan et al. (2009).

on both a deceleration and acceleration sled would provide the same end results given that the test meets the currently defined constraints. Similarly, Mr. Hauschild commented that the vehicle pulse must be incorporated into both an acceleration and deceleration sled test procedure, as it will influence the ATD kinematics.

ARCCA recommended that side impact testing of the CRS also be conducted at a severity level comparable to side-NCAP vehicle crash testing. ARRCA stated its belief that the higher severity testing would be consistent with crash severity levels currently used to ensure that adult occupants are optimally protected.

Agency Response

The final test's procedure specifications are in large part the same as that proposed in the NPRM, with some refinements. In response to the questions posed by NHTSA in the NPRM, and as discussed in more detail below, many commenters supported including a relative door velocity profile in the final test procedure. NHTSA concurs and has included the profile into the final test procedure. As discussed further in a section below, NHTSA's testing at Kettering University after issuance of the NPRM using a deceleration-type sled showed good coefficient of variation (CV) values. The reproducible results from VRTC and Kettering confirm that the side impact test can be performed in the different sled systems and produce the same results.

NHTSA disagrees with ARCCA's comment that CRS side impact testing be conducted at a severity level comparable to side-NCAP vehicle crash testing. The FMVSS No. 214 MBD impact test speed of 53.9 km/h (33.4 mph) accounts for approximately 92 percent of near-side crashes involving restrained children (0- to 12-years-old children in all restraint environments – seat belts and CRSs). The NCAP side impact MDB test is performed at an impact speed of 61.9 km/h (38.4 mph), which is 8 km/h (4.9 mph) greater than the speed required in FMVSS No. 214.

The side impact performance requirements set by the FMVSS[169] are established at a threshold level of performance that meets the need for motor vehicle safety and that satisfies the other requirements for setting FMVSSs established by the Safety Act. NCAP's side impact performance tests are set at a higher speed to provide comparative information consumers can use to shop for vehicles, and to incentivize vehicle manufacturers to attain higher levels of performance beyond the minimum set by the FMVSS. In order to estimate the effectiveness of CRS padding to mitigate fatalities in side crashes, NHTSA conducted an in-depth investigation of all cases in the NASS/CDS and Special Crash Investigation (SCI) data files for the 8-year period from 2002 to 2009 where a vehicle impacted on its side in a crash had a CRS restrained child occupant who was killed in the crash.[170] Results showed that for near side impacts, most fatalities (14 out of 17) were not survivable due to extensive vehicle damage and intrusion (which indicated increased severity/speed) or gross misuse. The agency determined that additional padding and improved CRS designs would not have prevented the 14 child occupant fatalities. Therefore, NHTSA does not believe that increasing the test speed above the FMVSS No. 214 MDB impact speed will provide additional safety benefits that merit the change. In making regulatory decisions on possible enhancements to CRS performance, NHTSA bears in mind consumer acceptance of cost increases to child seats, a highly effective item of safety equipment. Countermeasures employed to meet requirements beyond those necessary to meet a safety need may result in additional costs that could reduce CRS sales and CRS use. For these reasons, NHTSA declined to raise the test speed of FMVSS No. 213a to match that of side-NCAP tests.[171]

2. Specific Issues

---

[169] Per the National Traffic and Motor Vehicle Safety Act, "motor vehicle safety standards" means a minimum standard for motor vehicle performance, or motor vehicle equipment performance, which is practicable, which meets the need for motor vehicle safety and which provides objective criteria.

[170] Preliminary Regulatory Impact Analysis – Side Impact Test for Child Restraints FMVSS No. 213, January 2014. Docket No. NHTSA-2014-0012-0007.

[171] The severity of the FMVSS No. 213a test protocol is greater than the existing side impact test in ECE R.129.

The following sections discuss additional comments received on aspects of the test procedure related to the sled kinematic parameters, including the sliding seat acceleration profile, the door impact velocity and relative velocity and impact time, and the longitudinal crash component, and the agency's response to those comments.

i. **Sliding seat acceleration profile**

To obtain a target acceleration profile for the sliding seat that represented the motion of a struck vehicle, NHTSA analyzed the right rear sill (the opposite side of impact) lateral (Y-axis) acceleration of ten small vehicles in FMVSS No. 214 tests.[172] The results showed a change in velocity of approximately 26 to 29 km/h (16 to 18 mph). The right rear sill accelerations were averaged to derive a typical struck vehicle acceleration corridor for small-sized vehicles.

Figure 6 shows the upper and lower boundaries of the rear sill accelerations in thick solid black lines while the dotted line represents the average of the accelerations. The solid thin black line in Figure 6 is a representative sliding seat acceleration pulse.

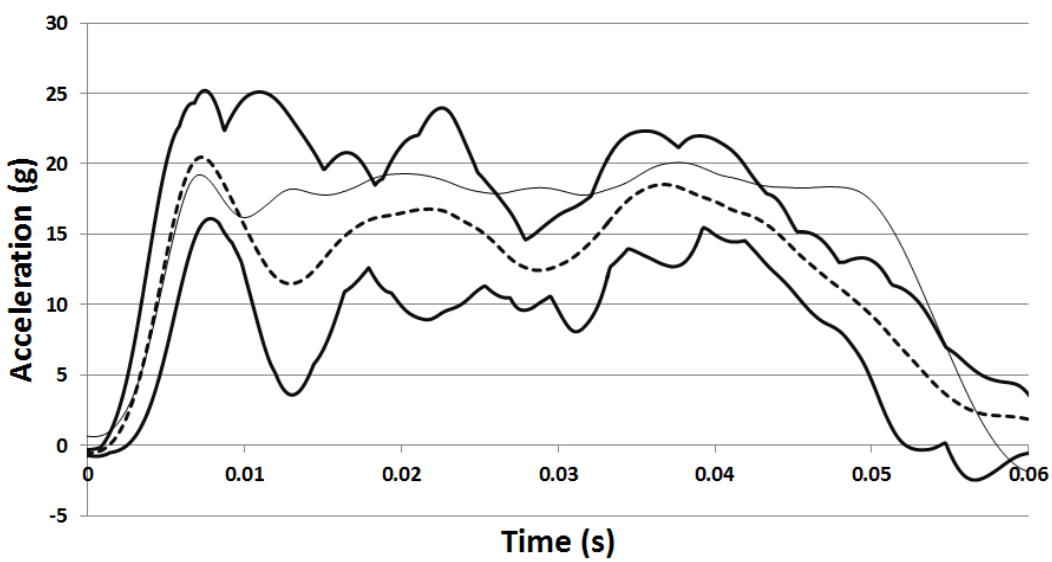

Figure 6 – Average Sliding Seat Acceleration along with Vehicle Lateral Acceleration Corridor

[172] Sullivan et al. (2009).

Accordingly, in the NPRM, NHTSA defined the acceleration corridor for the sliding seat as shown in Figure 7:

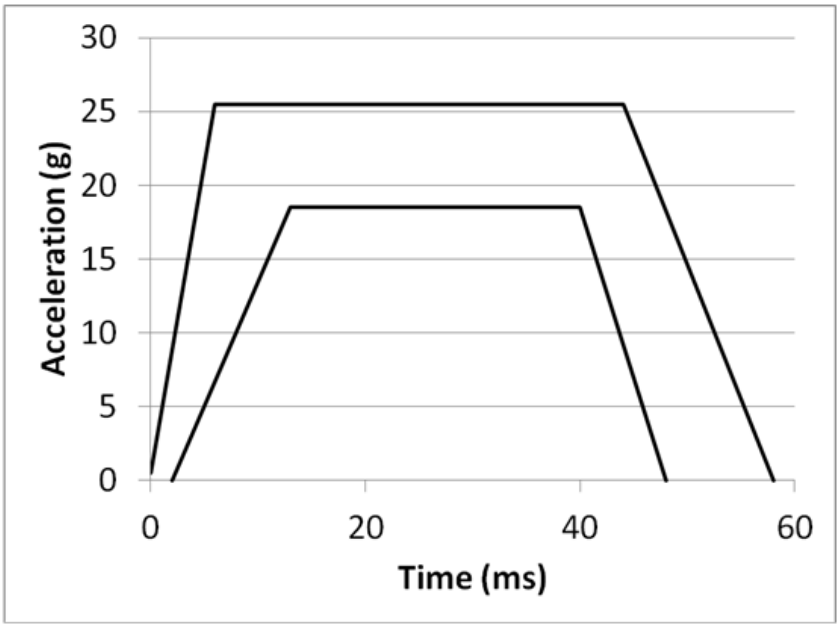

Figure 7 – SISA Bench Seat Acceleration Boundaries (NPRM)

Mr. Hauschild argued that the proposed trapezoidal pulse for the overall crash pulse is not representative of real-world crashes of current smaller and medium-sized vehicles, stating that a side impact event in small- and medium-sized vehicles can be harder to protect against than in larger vehicles. He stated that during the crash event of small- and medium-sized vehicles, typically there is a sharp acceleration in the first 10-15 milliseconds ending with the trapezoidal shape for the remaining 45-50 milliseconds, and that the acceleration pulse shape will influence dummy head excursion and displacement. Mr. Hauschild recommended that NHTSA examine the influence of vehicle pulse shape on dummy kinematics.

NHTSA concurs that smaller vehicles experience a side impact differently than larger vehicles but disagrees that the proposed corridor for the pulse is not representative of the real-world crash of smaller and medium-sized vehicles. NHTSA explained in the NPRM that the proposed acceleration corridor was based on the vehicle accelerations of small passenger vehicles in the FMVSS No. 214 MDB side impact tests and therefore represents the more challenging side crash environment of small vehicles. Comparing the accelerations of the 10 small vehicles, Figure 8 shows that in the initial 10 milliseconds, the proposed corridor allows

for a sharp acceleration, as described by Mr. Hauschild. In addition, the proposed FMVSS No. 213a sliding seat acceleration pulse follows that initial sharp acceleration in a similar manner as the vehicle acceleration pulses in these small-vehicle FMVSS No. 214 side impact tests. This is also consistent with the sharp acceleration in the first 10-15 milliseconds, followed by a trapezoidal shape for the remaining 45-50 milliseconds as described by Mr. Hauschild. While the trapezoidal acceleration corridor is necessary to allow for the oscillations that will be present during the side impact test, the corridor must be limited, as a wider corridor that would encompass the lower bound of all vehicle curves could also increase the variability of testing and make reproducibility more difficult. As shown in the figure below, the acceleration corridor is representative of the accelerations experienced in a side impact of a small vehicle. Accordingly, this final rule adopts the acceleration boundaries as proposed.

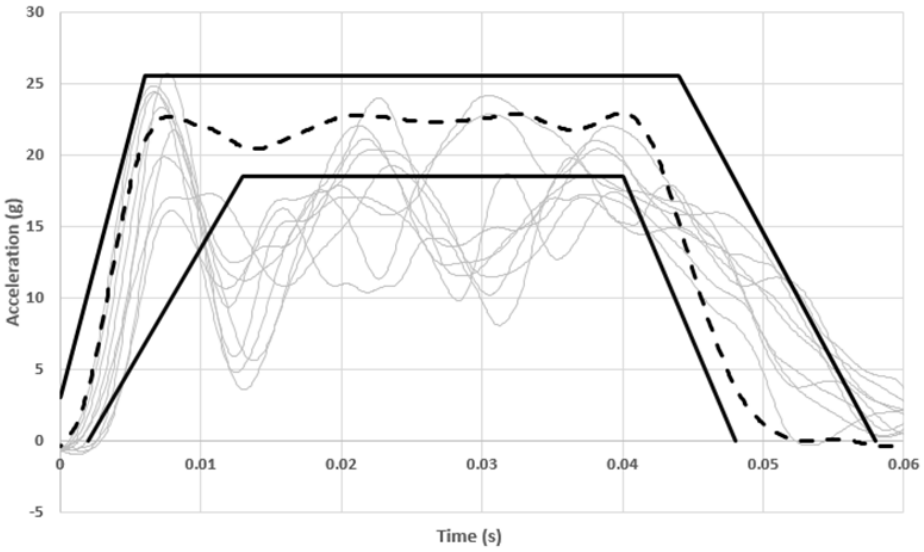

Figure 8. Vehicle right rear sill lateral acceleration (thin grey lines), typical sliding seat acceleration (black dashed) and acceleration corridor (thick black lines).

ii. Tuning the test to account for lighter dummies

JPMA commented that, when testing CRSs using lighter weight dummies like the 12-month-old CRABI, Calspan (an independent testing facility) has added weight to the sliding seat to maintain the pulse in the corridor specified by the NPRM. JPMA argued that the addition of

this weight was not mentioned in the NPRM, and that such a practice could impact results and introduce variation if only some test facilities were doing it. JPMA suggested that NHTSA consider addressing how to maintain a pulse within the corridor when testing with lighter weight dummies like the 12-month-old CRABI.

In response, NHTSA has tested CRSs at two different test facilities: VRTC, using an acceleration-type sled and Kettering University, in a deceleration-type sled. In both test facilities, the variation in weight of the CRS and the dummy has had no significant effect on the pulse. However, when Kettering University tested lower-weight infant carriers with the 12-month-old CRABI dummy, it had to add weight to the sled system (not the sliding seat) because the impact speed increased, making the corridor and impact speed slightly higher than the FMVSS No. 213a test specifications.[173] These sensitivities will have to be tuned at each test facility, as each facility will have to provide the correct input that results in the required velocity and accelerations of the sled buck and the sliding seat. The inputs are not consequential to test outcomes, as long as the required velocities and accelerations are attained for the test. Thus, the agency has decided that no change to FMVSS No. 213a is necessary.

iii. Acceleration corridor

MGA suggested several modifications to the proposed sliding seat acceleration corridor. First, MGA suggested that the corridor be widened at time T_0 (time when the siding seat first contacts the door assembly), to a 3G maximum. MGA stated that the sliding seat will have some acceleration at time of contact, making it difficult for the acceleration profile to fit into the very narrow acceleration range of the corridor at time T_0. Next, MGA suggested the agency change the slope of the lower boundary of the corridor from time T_0 to time 15 msec after T_0 to match

[173] More details on how and when Kettering adjusted its sled system weight can be found in the technical report: Brelin-Fornari, J., "Final Report on CRS Side Impact Study of Repeatability and Reproducibility using a Deceleration Sled," July 2017.

the slope of the upper boundary of the corridor to further widen the corridor. MGA stated that the rise time of the test is dictated by the honeycomb, which has a very sharp rise rate that does not match that of the lower boundary of the corridor. Separately, MGA stated that further specification needs to be provided on the measurement of the sled and sliding seat acceleration and velocities. MGA used points (time versus G level) on the corridor for the acceleration of the sliding seat as an example of such additional data.

Agency Response

Regarding MGA's first suggestion to increase the acceleration upper boundary at time T_0 to 3 Gs, NHTSA's testing at VRTC and testing at Kettering obtained sliding seat accelerations that fell within the proposed acceleration corridor at time T_0. The sliding seat had some movement prior to impact with the honeycomb, however, that movement is minimal and results in negligible acceleration of the sliding seat. Additionally, MGA's comments during the second comment period showed that it was able to meet the proposed sliding seat acceleration corridor at time T_0.[174] Additional test data provided by Graco in support of its comments to the NPRM also indicated that the initial acceleration of its sliding seat was within the proposed sliding seat acceleration corridor. Therefore, data indicate MGA's concern regarding the narrow initial acceleration corridor of the sliding seat is no longer an issue, and so the agency has made no change to the proposed sliding seat acceleration corridor at and near time T_0.

MGA also suggested making the first leg of the lower acceleration corridor wider. NHTSA believes that this also may no longer be an issue, as data provided by MGA and Graco show that the test facilities could meet the sliding seat acceleration corridor. NHTSA believes it must balance the capability of test facilities to meet the acceleration corridor with maintaining good repeatability of the test. For these reasons, NHTSA is not modifying the lower boundary of the acceleration corridor between time T_0 and 15 msec after T_0, as suggested by MGA.

[174] NHTSA-2014-0012-0043, at pg. 2 (Figure 1).

In response to MGA's comment that further clarification needs to be provided on the measurement of the sled and sliding seat acceleration and velocities, the agency has included the sliding seat acceleration corridor coordinates in this final rule's regulatory text.

After consideration of these comments, NHTSA is maintaining the sliding seat acceleration profile proposed in the NPRM for the final test procedure. This acceleration profile appropriately represents the accelerations experienced in a side impact of a small vehicle.

3. Door parameters

The door velocity (which represents the struck vehicle door velocity) was obtained from the integration of door acceleration data from four of the ten aforementioned FMVSS No. 214 compliance tests (these four vehicles were the only ones tested with accelerometers installed on the door). The accelerometers were installed in the inner structure of the door at the upper centerline and mid centerline door locations. The resulting lateral (Y-axis) peak velocities of the door during interaction with the test dummy ranged from 30 km/h (18.6 mph) at the upper centerline to 32.0 km/h (20 mph) at the mid-centerline. Thus, the target lateral door velocity selected for the test buck was 31 km/h (19.3 mph), the average of the velocities, prior to the honeycomb contacting the sliding seat structure.

NHTSA explained in the NPRM that, since the kinematics of the door prior to the interaction with the sliding seat do not affect the energy and impulse imparted to the sliding seat and child restraint system, the agency believed that the acceleration profile of the impacting door did not need to be specified as long as its velocity during the interaction with the sliding seat and child restraint system is maintained within specified velocity tolerances.

Response to Comments

Dorel and JPMA requested clarification of data and information contained in Figure 25 of the "Child Restraint Side Impact Test Procedure Development" technical report (velocity data plots from vehicle test 6635 and sled test 6904).[175] Dorel noted the peak velocity of the sliding

[175] Sullivan et al. (2013).

seat appeared to be 27 km/h (16.7 mph). While the door velocity has a 34 km/h (21.13 mph) at T_0 and a 30.5 km/h (18.95 mph) door velocity at 50 ms, Dorel argued that this did not appear to be consistent with the specifications of the NPRM to: (1) accelerate the test platform to achieve a relative velocity (V_0) of 31.3 ± 0.8 km/h in the direction perpendicular to the SORL between the SISA sliding seat and the door assembly at the time they come in contact (time = T_0); and (2) ensure the sliding seat has a change in velocity of 31.3 ± 0.8 km/h and an acceleration within the proposed corridor.

Agency Response

The purpose of Figure 25 of the technical report was to illustrate that the event of the side impact sled test is very similar to the FMVSS No. 214 vehicle side impact crash. Test 6635 was one of the 4 vehicle tests that helped determine the door velocity. Because the vehicle inner door velocities are only measured in two points in the door and the initial door velocities are not stable as shown by the wide oscillations in the beginning of the event, the door velocity was taken once the door velocity signal was stabilized, which was between 30 km/h (18.6 mph) and 32.0 km/h (20 mph). These velocities were within the ranges specified in the NPRM. When the door interacts with the seat, the seat starts to move along with the door, and so the velocity of the seat is the same as that of the door. In the side impact sled test, the sliding seat interacts with the door and moves along with the door after crushing of the honeycomb structure. As shown in Figure 25 of the referenced technical report, the simulated door and sliding seat velocity of the sled test configuration is most similar to that of the Nissan Sentra.

Graco and MGA commented that they were unable to keep the door velocity at less than or equal to the initial door velocity (V_0) and greater than or equal to V_0-1 km/h during the interaction with the sliding seat. Graco presented a velocity pulse comparison from three different test labs, stating that, while it appeared that the velocity requirements and acceleration corridor were achievable on a consistent basis, their testing indicated that all three test facilities were not able to meet the requirement for the door structure velocity to stay within 1 km/h during

contact with the sliding seat.[176] Graco surmised that the variation drivers between the three facilities were most likely the aluminum honeycomb area, differences in accelerometer types and locations, and differences in pressure settings. Graco suggested that the countermeasures to improve the consistency of aluminum honeycomb geometry may improve this inconsistent velocity. Graco compared velocity results to the actual proposed limits to understand if the targets were achievable and commented that the limits appeared to be achievable, but controls are needed to prevent the sliding door velocity from falling more than $V(T_0)$-1 during the door contact event.

NHTSA agrees with Graco that the honeycomb area and volume are important to control the sliding seat acceleration. This final rule's SISA specification includes details on the honeycomb material and its dimensions to improve reproducibility of the test results. However, we clarify to readers that the honeycomb area and/or volume can be modified, as necessary, to tune each system to obtain a sliding seat acceleration within the specified acceleration corridor; the regulatory text does not provide express specifications on this aspect of the procedure.

NHTSA agrees that the accelerometer type and location are important to achieve consistent results in different test facilities. Accordingly, the accelerometer type and location have been specified in the final SISA technical drawings.

Graco also requested that NHTSA provide more background information, including NHTSA's experimental data, regarding the need to control the relative velocity within 1 km/h while the door structure is in contact with the sliding seat. Graco suggested that if this is not a critical parameter, NHTSA should consider increasing the 1 km/h limit because test facilities did not meet the proposed specification. Similarly, MGA stated that it successfully met the sled test specifications but was unable to meet the requirement that the door velocity not decrease more than 1 km/h during the interaction with the sliding seat. MGA explained that during the time of

[176] NHTSA-2014-0012-0042, at pg. 5. Graco stated that crash test facilities 1 and 3 had the door structure relative velocity drop more than 1 km/h [0.62 mph] and that crash test facility 2 did not meet the target velocity of 19.45 mph at T_0 and also demonstrated increased velocity during the time of contact with the sliding seat.

interaction (which MGA assumed to mean the duration of the honeycomb crush – roughly 50 ms to 100 ms), MGA observed a velocity change from around 32 km/h to around 29 km/h (a 3 km/h change), and noted that the velocity change at VRTC was from 32 km/h to around 30 km/h (a 2 km/h velocity change).[177] MGA stated that the velocity change during the impact in both the test facilities would be considered to be outside the limit proposed by the NPRM, and suggested that this test specification be modified.

After considering these comments and other information, NHTSA is modifying the specification for door velocity. NHTSA added this specification because Takata had demonstrated[178] that when the door velocity reduces by more than 4 km/h during the interaction with the sliding seat, the HIC values and chest deflections measured on the Q3s were significantly reduced. However, as discussed further below, because NHTSA is specifying a relative velocity corridor between the door and the sliding seat -- in addition to specifying the sliding seat acceleration corridor and the door velocity at the time of contact with the sliding seat -- specifications of the door velocity during the interaction of the sliding seat can be widened to some extent. NHTSA's testing with the final SISA configuration showed that the sled/door velocity reduced 1.66 to 1.89 km/h during the interaction with the sliding seat, from the door velocity at time of initial contact with the sliding seat.[179] In order to ensure satisfactory reproducibility of the side impact test while providing reasonable flexibility to testing facilities to conduct the test, NHTSA is specifying that the door (sled) velocity during interaction with the sliding seat not decrease beyond 2.5 km/h from the door velocity at the time the door structure contacts the sliding seat. NHTSA believes that if the door velocity reduces beyond 4 km/h during the interaction with the sliding seat, it may not be possible to meet the specifications for

---

[177] NHTSA-2014-0012-0043, at pgs. 10-11.
[178] Study of Global Road Safety Partnership (GRSP) side impact testing. Takata Corporation. November 10, 2011. Docketed with this final rule.
[179] Interaction with the sliding seat is considered to be during the period from time T_0, when the sliding seat is first impacted by the door assembly, to the time when acceleration of the sliding seat reaches 0 G, usually between 48 and 58 ms from T_0.

the sliding seat acceleration corridor or the relative velocity corridor. This is discussed in more detail below.

4. Relative door velocity profile

The 2014 NPRM proposed a door impact velocity and a sliding seat acceleration profile and requested comment on whether a relative door velocity profile should also be specified. NHTSA stated that a relative door velocity profile (with respect to the sliding seat) may be desirable to ensure a more reproducible interaction of the intruding door with the child restraint in different types of sled systems, and requested comments on the need for specifying a relative door velocity profile to improve reproducibility of the test procedure. NHTSA stated that, depending on whether the agency received information sufficiently supporting such a velocity profile, one may be included in the final rule.

Response to Comments

Dorel supported the inclusion of two separate velocity profiles, one for the bottom part of the sled that has the door and one for the sliding seat.[180] Dorel believed that two velocity profile specifications would provide improved parameters for repeatability at individual test facilities and improved reproducibility between test facilities.[181]

NHTSA has determined that specifying a door velocity profile relative to the sliding seat will improve the reproducibility of the interaction of the intruding door with the child restraint, and thus has defined the relative velocity between the sled door and the sliding seat. This is consistent with Dorel's suggestion of having two separate velocity profiles. Since the relative velocity is calculated using the velocities of the sled carriage and the sliding seat, it would be controlling both velocities to improve the repeatability and reproducibility throughout the event, not only at impact. If these velocities are not controlled, it may be possible to create different

[180] The sled carriage is the bottom part of the sled, and the sliding seat is on top of that.
[181] Dorel stated that, if sufficient repeatability and reproducibility were later validated, it would not object to the simplification of the requirement at that time.

velocity profiles with more fluctuations that may result in different injury measures. The impact speed at time T_0 (the time at which the door contacts the sliding seat structure) is the relative velocity between the sled door and the sliding seat. While in an acceleration-type sled the velocity of the sliding seat is close to zero, there is some slight movement of the sliding seat before impact with the door assembly, and this movement may vary at each test facility. In a deceleration-type sled, the velocity of the sled door is zero at the time of the impact of the door assembly with the sliding seat. Each test facility will have to tune its system to determine the necessary velocity of the sled door to achieve the required relative velocity at the time of impact (T_0) with the honeycomb, regardless of whether it is done in an acceleration-type or deceleration-type sled system.

Graco commented against a relative velocity profile, believing this to possibly over-constrain the system. Graco requested that NHTSA provide data demonstrating that a CRS tested on both a deceleration and an acceleration sled would provide the same end results given that the test meets the currently defined constraints (door velocity requirements and sliding seat velocity/acceleration requirements). In response, NHTSA's demonstration of repeatability and reproducibility using both a deceleration and acceleration sled is discussed in the section below, "Reproducibility and Repeatability."

JPMA stated that, contrary to what was stated in the NPRM preamble, the proposed regulatory text for S6.1.1(b) specified a sliding seat acceleration pulse and a relative door velocity, but not a door velocity. JPMA added that the proposed regulatory text included a specification that the velocity of the sled be the same as the relative door velocity.

The NPRM proposed a specification to "accelerate the test platform to achieve a relative velocity (V_0) of 31.3 ± 0.8 km/h in the direction perpendicular to the seat orientation reference line[182] (SORL) between the SISA sliding seat and the door assembly at the time they come in

[182] Seat orientation reference line means the horizontal line through Point Z as illustrated in Figure 1 of S4 in the regulatory text of the NPRM.

contact (T_0)." This is not the same as proposing a specific door (sled) velocity profile; instead it is a specification that this door velocity could not be reduced more than 1 km/h during the interaction with the sliding seat. The door velocity and the "relative door-sliding seat velocity" are not necessarily the same. The velocity of the door relative to the sliding seat refers to the velocity difference between the door and the sliding seat. If the sliding seat velocity is equal to zero, the door velocity and the relative velocity of the door and sliding seat would be the same, but as there is some slight movement of the sliding seat prior to impact, the velocity of the door and the relative velocity of the door and sliding seat are not the same. In this final rule, NHTSA is adopting not only a relative velocity at time of impact of the door assembly with the sliding seat, but also a relative velocity corridor throughout the event (relative velocity corridor).

In the December 15, 2021 meeting, JPMA[183] requested that NHTSA specify an incoming sled carriage pulse corridor to reduce lab-to-lab test variability. Additionally, JPMA requested adding bracing and structural improvements to the door assembly to eliminate dampened oscillatory motions during testing.

NHTSA disagrees with JPMA regarding the need to specify an incoming sled carriage acceleration pulse to minimize lab-to-lab variability. The testing at VRTC and at Kettering,[184] detailed in Section IX, demonstrated that specifications for the sliding seat acceleration profile corridor, the relative velocity at impact time, and the relative door velocity profile corridor are sufficient to ensure adequate reproducibility of the test not only at different test facilities but also when using different types of sled systems (deceleration and acceleration sled systems) where the incoming sled carriage acceleration pulses can be very different. Regarding rigidizing the door assembly, NHTSA does not see the need for it. While there may be some door oscillations, the side impact test has been validated against vehicle tests (which also showed door oscillations) and has consistently produced repeatable results in tests conducted at VRTC and Kettering. As

---

[183] *Supra*, see Docket No. NHTSA-2014-0012.
[184] Wietholter, K. & Louden, A. (2021, November). *Repeatability and Reproducibility of the FMVSS No. 213 Side Impact Test.* Washington, DC: National Highway Traffic Safety Administration.

long as the relative door velocity and the sliding seat accelerations are within required specifications (including the relative door velocity profile corridor adopted in this final rule), there is no need to make further structural improvements to the door assembly.

TRL recommended, based on its experience, that a relative velocity should be specified to ensure consistent test input conditions between test facilities. TRL commented that the side impact test in ECE R.129 was developed on a deceleration sled and that TRL validated this method for the European commission. TRL explained that this validation included investigating the repeatability and reproducibility of the test method as well as validating it against full scale crash tests. TRL added that this experience showed that the door-sled relative velocity is an important factor to control, and that without a control on this parameter the test severity can vary.

MGA commented that input constraints for just the sliding seat acceleration and relative sliding seat/door velocity limit should be sufficient.

NHTSA agrees with TRL that the velocity of the door relative to the sliding seat at the time the honeycomb contacts the sliding seat and throughout the side impact event is an important parameter that should be specified in this final rule. Figure 9 shows the average (dotted line) and the upper and lower boundaries (solid lines) of the velocity profile for the door relative to the sliding seat in sled tests performed during the development of the test procedure prior to the NPRM. The upper and lower boundaries of the relative door velocity represent the maximum and minimum values of the relative door velocity profiles in these sled tests.

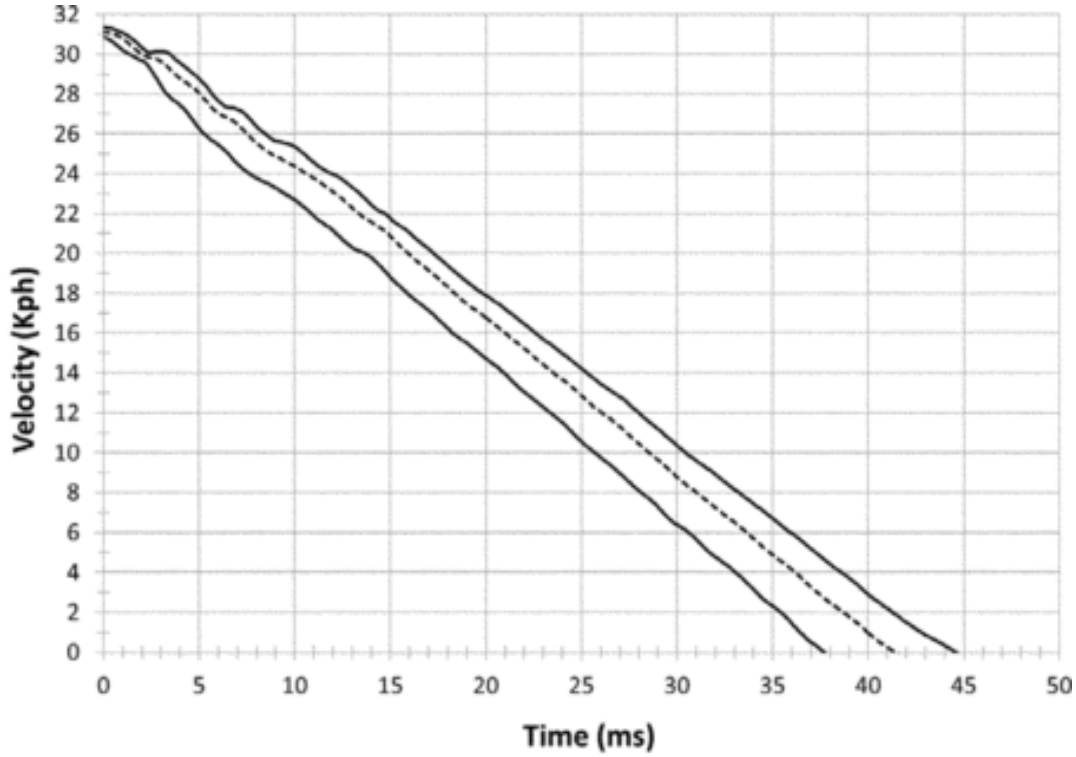

Figure 9 . Average profile and upper and lower boundaries of the relative velocity of the door with respect to the sliding seat.

After consideration of comments and other information, NHTSA has decided to include a requirement for the relative door velocity with respect to the sliding seat to control the door interaction with the sliding seat and CRS throughout the event. Further, TRL had commented that a defined range for door intrusion is a factor affecting the severity of the test and should be defined to ensure consistent test conditions. The relative door velocity specification in this final rule will also control the intrusion of the door into the seat compartment.

The coordinates of the relative velocity corridor are defined in the regulatory text. Using data from testing with the updated sliding seat design in two laboratories (see Figure 10), NHTSA developed a slightly different relative door velocity corridor with respect to the sliding seat from that presented in the preamble of the NPRM. This corridor is wider than the corridor in the NPRM to allow more flexibility in conducting the test at different test facilities while maintaining good repeatability and reproducibility. While Graco commented that a relative velocity corridor may over-constrain the system, we believe a relative velocity corridor is

necessary to control the velocity throughout the event, which will help maximize repeatability and reproducibility.

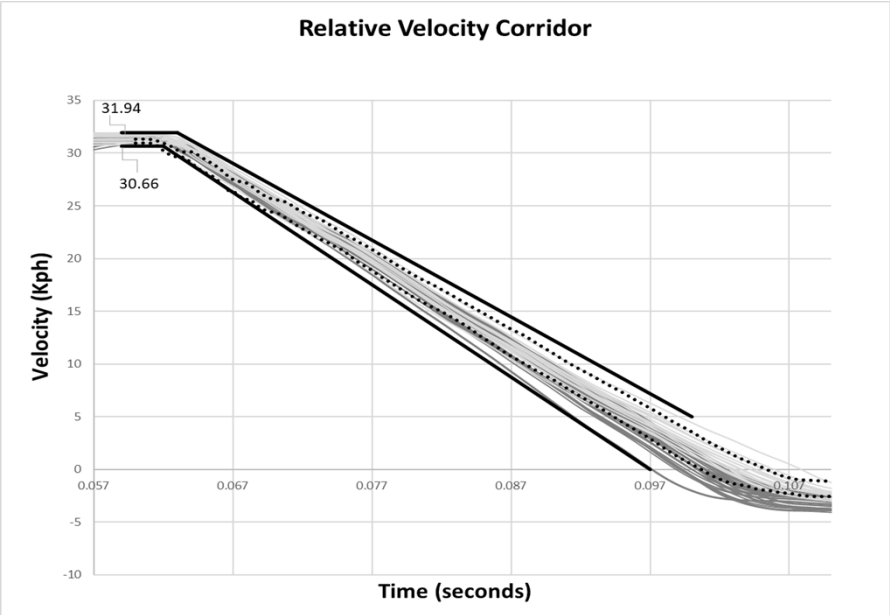

Figure 10. Upper and lower boundaries of the relative velocity of the door with respect to the sliding seat (thick black), VRTC tests (dark grey[185]), Kettering tests (light grey[186]) and NPRM relative velocity corridor (dotted).

5. Relative velocity at impact time (T_0) – tolerance

NHTSA proposed an impact (T_0) relative velocity (V_0) of 31.3 ± 0.8 km/h, meaning at time of impact of the door with the sled, the relative velocity is within 31.3 +/- 0.8 km/h. The agency performed a series of tests to determine the effect of the relative velocity at time T_0 on performance measures. NHTSA intended to conduct three tests of a CRS model by varying the relative velocity at time T_0 within a range of 1.6 km/h to cover the allowable range in velocity; however, one of the tests performed at the lower speed (30.28 km/h) fell out of the allowable relative velocity limits of 30.5 km/h to 32.1 km/h. Table 17 below shows the results of these repeat tests.

Table 17. Sensitivity Analysis of the Relative Velocity of the Door with Respect to the Sliding Seat at Time of Impact (Time T_0) with the Q3s ATD in a Graco Ready Ride CRS Installed Forward-Facing using CRAS.

[185] Tests that were within new relative velocity tolerance at impact time conducted at VRTC in April 2017 and November 2017.

[186] Tests that were within new relative velocity tolerance at impact time conducted at Kettering University in 2016.

Database Test No.	CRS	HIC15	Chest Deflection [mm]	Impact Relative Velocity [km/h]	Impact Relative Velocity [mph]
10279	**Graco Ready Ride**	587	20.45	30.28	18.82
10273		723	19.82	31.06	19.29
10272		771	21.48	31.99	19.88
	Average	693.66	20.58		
	Std Dev	77.67	0.68		
	CV %	11	3		

Results showed that coefficient of variation (CV)[187] values for HIC15 reached 11 percent and chest deflection only 3 percent. Given the slightly high CV values for HIC15 at the extreme ranges, NHTSA concluded that reducing the tolerance for the specified relative velocity would be beneficial to control repeatability and reproducibility. NHTSA updated the impact relative velocity and tolerance to 31.3 ± 0.64 km/h (instead of 31.3 ± 0.8 km/h) to better achieve the desired repeatability and reproducibility within the parameters of sled systems. Both acceleration (at VRTC) and deceleration (at Kettering) sled systems were able to consistently produce impact relative velocity within the specified reduced relative velocity tolerance levels. Tests results with relative velocities within the reduced tolerances showed good repeatability and reproducibility, and are discussed in more detail in Section IX.

6. Longitudinal crash component

NHTSA determined the impact angle of the sled buck using data from the same ten small vehicle FMVSS No. 214 tests that were used to derive the acceleration corridor and door velocity. NHTSA evaluated the effect of the test buck's impact angle on dummy kinematics and injury responses through a range of testing at 0, 10, 15, and 20 degrees. Based on the tests and average impact angle calculated from the FMVSS No. 214 tests, NHTSA selected a 10-degree

[187] The percent coefficient of variation (%CV) is a measure of variability expressed as a percentage of the mean.

impact angle as the most appropriate. NHTSA found that a 10-degree impact angle on the sled test produced dummy responses closer to those measured by the ATD in the same CRS in the four MDB crash tests than the other impact angles. This work was described in detail in NHTSA's 2009 Initial Evaluation study.[188]

Dorel and JPMA noted that during sled tests conducted by the agency for the proposed rule, the child dummy experienced what the commenters described as artificial forward head movement before crash impact. Dorel described that the CRS seat back pulls away from the head in the agency's sled side impact test video (100629-3) prior to T_0 (T_0 being time of contact of the sliding seat with the door assembly). Dorel believed this movement to be an artifact of the 10-degree fixture angle and the pre-test distance of the sliding seat from the side door assembly.

Dorel stated that the sliding seat is positioned sufficiently away from the side door to allow the sled to reach a desired velocity (31.3 km/h) prior to the time the sliding seat starts to accelerate to a specific acceleration profile. The commenter stated that, during this run up time and prior to the interaction of the sliding seat with the door, the CRS seat back pulls away from the head. Dorel further stated that, in accordance with Newton's 1st law that an object at rest (in this case, the head) will stay at rest unless an external force acts upon it (in this case the CRS pulling the ATD torso), the ATD's head is tilted forward prior to the interaction of the striking vehicle and door.

Dorel provided data showing that the measured head displacement in sled tests with its forward-facing Safety 1st Air Protect CRS appeared to be as much as 86 mm (3.4 in) at T_0 and 185 mm (7.3 in) at T_0+29 msec.[189] Dorel noted that during this period, the dummy head remained in the center of the main sled rails while the 10-degree rails with the sliding seat pulled the CRS laterally away from the head. Dorel stated that this motion placed the head out of position in relation to the side wings of the CRS prior to impact and thus artificially deprived the

[188] Sullivan et al. (2009).
[189] See NHTSA-2014-0012-0035, at pg. 3. In Dorel's first comment submission it reported a head displacement between 48 mm (1.9 in) to 54 mm (2.1 in).

dummy of the benefit of the side wing protection, and may artificially increase the measured injury values. Dorel stated its belief that this head motion appeared to react like pre-crash braking prior to the vehicle being struck in its side, which is not apparent in the FMVSS No. 214 MDB crash test video or data. Dorel explained that the FMVSS No. 214 test method does not incorporate pre-crash braking of the struck vehicle prior to MDB side crash in its simulation.

As additional support for this proposition about the artificiality of the proposed test, Dorel described a 2014 full scale, vehicle-to-vehicle side impact test conducted by Transport Canada Research & Development. Dorel explained that the struck vehicle in this test was a 2011 model year passenger car with the near side rear passenger position occupied by a Q3s dummy restrained by the internal harness of a forward-facing Alpha Elite (Non-Air Protect Model) CRS installed using the lower anchors of a child restraint anchorage system[190] and tether. Dorel provided screenshots of the dummy kinematics during the test and noted that at T_0-65 and T_0, there was no head displacement, while measurement from T_0 to T_0+29 showed ~24mm lateral movement of the Q3s dummy head.[191] Dorel also referenced a 2002 New Car Assessment Program side impact (SINCAP) test series that included CRSs in rear seating positions, where the ATD did not experience pre-crash head motions. Dorel provided still photographs of the dummy from a test with the Nissan Sentra with a Dorel Triad CRS installed in the rear seat.[192] Dorel stated that the photographs illustrate the same T_0 head motion references as the Transport Canada tests.

Dorel referenced its proposed test procedure (the Dorel-Kettering method proposed in a May 2009 petition, discussed above) that did not exhibit pre-crash event head motion. Dorel commented that the Dorel-Kettering method did not induce unintended head motion prior to T_0 (as the seat assembly is stationary at the time of impact). The commenter emphasized that the head motion of the ATD is not observed in the FMVSS No. 214 MDB tests that the agency used

---

[190] See 49 CFR 571.225.
[191] See NHTSA-2014-0012-0045, at pg. 3.
[192] Id.

as the basis for NHTSA's proposed test method for FMVSS No. 213a and that Dorel used to develop its Dorel-Kettering side impact test.

Agency Response

The FMVSS No. 214 and the side NCAP crash tests are conducted with a stationary target vehicle, so there is no dummy head movement expected prior to impact. The MDB impacts the target vehicle at a crabbed angle (27 degrees) simulating a side impact of the target vehicle traveling at 24 km/h (15 mph) by the striking MDB traveling at 48 km/h. With the FMVSS No. 213a test procedure, the 10-degree angle of the motion of the sliding seat with respect to the sled system was to reproduce the longitudinal loading on the vehicle simulated in the FMVSS No. 214 vehicle test. The Dorel-Kettering test procedure does not have the capability of simulating this longitudinal component of the impact, which the agency believes is a limitation of their test. The longitudinal component of the impact is important to reproduce since real world data indicate that most side vehicle crashes have a longitudinal crash component.

As discussed in the NPRM, data indicate that child restraints should be designed to account for both longitudinal and lateral components of the direction of force in a side crash. Sherwood found that most side crashes had a longitudinal crash component.[193] A comparison of results of sled tests with the same door impact velocity conducted using the Dorel-Kettering method and the proposed FMVSS No. 213a side impact test showed that the dummy injury measures were consistently lower using the Dorel-Kettering test method. Dorel did not present any data demonstrating that the dummy responses in the Dorel-Kettering sled tests are similar to those observed in vehicle crash tests, while such data were provided in the NPRM. NHTSA believed the Dorel-Kettering test procedure needed further development to represent the crash environment experienced by children in child restraints in near-side impacts, and decided the test

[193] Sherwood, et al. "Factors Leading to Crash Fatalities to Children in Child Restraints," 47th Annual Proceedings of the Association for the Advancement of Automotive Medicine, September 2003.

method would not protect children in side impacts as completely as the proposed FMVSS No. 213a test procedure.

The agency tracked head motion during its repeatability and reproducibility test series (discussed further below) at VRTC and Kettering to quantify dummy head nodding (forward displacement) during the test. The tests performed at VRTC and Kettering used the proposed FMVSS No. 213a test procedure. As shown in Table 18, the average head displacement at the time of impact with the door assembly (T_0) was 48.9 mm at VRTC and 62.1 mm at Kettering. The maximum range of head forward displacement in the X-direction at T_0 in the VRTC tests was 6.4 mm and 14.6 mm in the Kettering tests. Differences in head position at time of impact between VRTC and Kettering for the same CRS ranged from 17.4 to 59.5 mm. The difference in the position of the head at the time T_0 in a test facility or between the two test facilities did not translate into unacceptable variability in the performance measures as shown in the repeatability and reproducibility analysis, discussed further below. Instead, the difference in head position was attributable to the longitudinal crash component in the FMVSS No. 213a test, an aspect of a side crash present in real-world intersection-type crashes.

NHTSA concurs with Dorel that there is forward head displacement prior to time T_0 in the proposed FMVSS No. 213a test. However, this displacement realistically reflects real-world side crashes, as struck vehicles in side impacts are usually travelling forward, and reflects the FMVSS No. 214 vehicle-to-vehicle side crash. The forward head displacement is not a test artifact that renders the FMVSS No. 213a test artificial; rather, it is an indicator of the representativeness of the test. Accordingly, NHTSA did not make any changes to the test procedure impact angle.

Table 18. TEMA[194] Head Motion Analysis in VRTC and Kettering Tests.

[194] TEMA means "TrackEye Motion Analysis" software.

Database Test No.	CRS Model	Lab	CRS Orientation	Dummy	Max. Head X Displacement (mm)	Head X Displacement at Impact (mm)	Range	Average Per Lab	Difference in Averages
10008	Chicco KeyFit 30	VRTC	RF	CRABI	46.4	43.4	1.3	43.6	-53.0
10009			RF	CRABI	49.2	43.0			
10010			RF	CRABI	51.4	44.3			
KET_071		Kettering	RF	CRABI	40.1	-12.5	5.0	-9.4	
KET_072			RF	CRABI	43.9	-7.5			
KET_073			RF	CRABI	39.1	-8.3			
10011	Britax Boulevard	VRTC	RF	CRABI	78.9	50.1	5.5	52.1	-17.4
10012			RF	CRABI	86.5	55.6			
10013			RF	CRABI	76.9	50.8			
KET_074		Kettering	RF	CRABI	58.1	27.5	12.5	34.8	
KET_075			RF	CRABI	64.7	40.1			
KET_076			RF	CRABI	66.2	36.7			
10014	Cosco Apt 40RF	VRTC	FF	CRABI	81.3	44.5	6.4	48.0	17.7
10015			FF	CRABI	94.6	51.0			
10016			FF	CRABI	92.7	48.6			
KET_077		Kettering	FF	CRABI	82.8	65.7			
10017	Graco Comfort Spor	VRTC	RF	Q3s	95.4	51.0	1.1	50.5	59.5
10018			RF	Q3s	92.7	50.7			
10019			RF	Q3s	91.6	49.9			
KET_068		Kettering	RF	Q3s	113.8	102.4	14.6	110.0	
KET_069			RF	Q3s	127.7	117.1			
KET_070			RF	Q3s	124.4	110.4			
10020	Graco Comfort Sport	VRTC	FF	Q3s	99.0	52.7	3.5	51.9	42.3
10021			FF	Q3s	101.1	53.3			
10022			FF	Q3s	100.8	52.0			
10100			FF	Q3s	102.1	49.7			
KET_064		Kettering	FF	Q3s	98.9	93.8	1.6	94.3	
KET_065			FF	Q3s	100.6	93.7			
KET_066			FF	Q3s	100.2	95.3			
10024	Evenflo Maestro	VRTC	FF	Q3s	119.7	47.8	1.9	47.0	33.9
10025			FF	Q3s	108.6	46.0			
10026			FF	Q3s	123.1	47.0			
KET_061		Kettering	FF	Q3s	100.2	88.7	11.7	80.9	
KET_062			FF	Q3s	91.3	77.0			
KET_067			FF	Q3s	88.0	77.0			

Note: RF means rear-facing CRS orientation, and FF means forward-facing CRS orientation.

d. Test set up and procedure

The proposed test procedure specified how child restraints would be installed and positioned on the sliding seat. In short, NHTSA proposed that:

- CRSs other than boosters would be attached to the SISA with the CRAS lower attachments and the child restraint's top tether would be attached if the owner's manual instructed consumers to attach the tether;
- Belt-positioning booster seats would be tested with Type 2 (lap and shoulder) belts; and,
- The CRS would be installed centered on the sliding seat, with the front face of the armrest on the door approximately 32 mm (about 1.25 inches) from the edge of the sliding seat (towards the CRS) at the time the honeycomb interacts with the sliding seat structure.
- The Q3s dummy would be positioned in the child restraint according to the manufacturer's positioning procedures.
- A CRS that is recommended by its manufacturer for use either by children having a mass between 5 and 10 kg (11 to 22 lb) or by children with heights between 650 and 850 mm, (25.6 and 33.5 inches) would be tested with the 12-month-old CRABI.
- A CRS that is recommended by its manufacturer for use either by children having a mass between 10 and 18.1 kg (22 to 40 lb) or by children with heights between 850 and 1100 mm, (33.5 and 43.3 inches) would be tested with the Q3s dummy.

1. CRS attachment

i. Lower anchor and/or seat belt CRS installation

FMVSS No. 213 currently requires most types of CRSs to meet the frontal crash requirements both when secured to the vehicle seat assembly with a vehicle belt, and when secured by a child restraint anchorage system (CRAS) (S5.3.2).[195] The 2014 side impact NPRM proposed to test CRSs other than booster seats with just the CRAS, as preliminary tests showed

[195] The belt system currently specified in FMVSS No. 213 is a lap belt (Type 1 belt). The November 2, 2020 NPRM proposed changing the belt to a lap/shoulder belt (Type 2 belt).

similar performance by the seats when attached by CRAS or by a Type 2 belt.[196] NHTSA requested comments on whether the proposed standard should also require these car seats to meet FMVSS No. 213a when attached to the seat assembly with a belt system.[197] Under the NPRM, belt-positioning booster seats subject to the standard would be tested with a Type 2 belt.[198]

Comments Received

Many commenters recommended that NHTSA conduct CRS testing under two different installation modes: by CRAS and by a 3-point lap/shoulder (Type 2) seat belt system.

Safe Ride News (SRN) argued that both a CRAS and a belt installation should be tested, as children under 18.1 kg (40 lb) will frequently be in a CRS that is installed with a seat belt due to the predisposition of some caregivers not to use CRAS, or the lack of lower anchors in a vehicle position (e.g., the center rear seat of the second row on most vehicles). SRN argued that non-passing results would compel manufacturers to improve their CRS designs for both lower anchor attachments and for seat belt attachment, and ensure an adequate routing of the seat belt "path" through the CRS to meet the side impact standard. SRN also requested the agency to provide the data supporting NHTSA's statement in the NPRM that the performance of the child restraints, when using CRAS and the belt system, were similar.

Britax and JPMA commented in support of the use of the Type 2 belt system, arguing that the majority of vehicles in the current fleet now have lap/shoulder belts across the rear seating compartment, and the use of Type 1 belts for testing is not consistent with the majority of in-vehicle belted installations. UPPAbaby also supported use of a Type 2 belt test as presenting a "realistic situation in the majority of vehicles today."

---

[196] As the original Takata test sled only had a Type 2 belt system, NHTSA modified the test bench seat to incorporate a child restraint anchorage system.
[197] 79 FR at 4589, col. 2.
[198] When the 2014 NPRM was published, it was possible for booster seats to be subject to the proposed standard, if such boosters were sold for children weighing less than 18.1 kg (40 lb). However, the November 2, 2020 NPRM proposed to amend FMVSS No. 213 so that booster seats could not be sold for children weighing less than 18.1 kg (40 lb). If the November 2020 proposal is adopted, booster seats will not be permitted to be sold for children weighing less than 18.1 kg (40 lb)—so the side impact requirements of FMVSS No. 213a will not apply.

Mr. Hauschild believed that NHTSA's finding that "the Type II [sic] belt system showed similar performance metrics to that obtained when the CRSs were attached using [CRAS]" was contrary to other research that examined CRAS and belt anchors.[199] He believed that CRS testing should include both CRAS and Type 2 belt systems, and that further studies may be needed to compare the performance of CRAS and Type 2 belts for side impact events.

Advocates recommend that each CRS be required to pass the proposed testing under all installation conditions specified by the manufacturer in its owner instructions for the specific restraint. Advocates stated that, if a CRS can be installed with CRAS, a Type I belt, or a Type 2 belt without the top tether, then it should be required to pass the proposed tests under all those conditions to ensure that the child will be offered the proper amount of protection regardless of the installation method selected by the caregiver.

Consumers Union (CU) also supported testing CRSs with both the CRAS attachment and Type 2 belts. CU stated that Type 2 belts are prevalent in current model vehicles, often occupy different belt paths on the child restraint than the CRAS belts, and use different "lockoff" mechanisms than in CRAS installations. (Lockoff refers to the use of CRS components that cinch or clamp the vehicle seat belt to prevent loosening of the seat belt. In some cases, CRS lockoffs, which vary by CRSs, can be used in lieu of "locking" the vehicle seat belt retractor using the standardized lockability feature of a vehicle's seat belt.) CU also stated that Type 2 belts may allow some additional "pivoting" of seats around their "buckle" side that may not be seen with CRAS, which may be critical to a comprehensive review of side impact performance. The commenter also referred, as did SRN and JPMA, to FMVSS No. 213's labeling requirements that restrict use of CRAS to where the combined weight of the CRS and child is

---

[199] The commenter referred to research that found there is less excursion using the CRAS compared to vehicle belts. In evaluating the comment, we determined that the research to which the commenter refers studied differences in performance involving far-side impacts. NHTSA's statement on the two different attachment methods having similar performance was referring to near-side impact tests where paired comparisons using different CRS installation methods resulted in HIC15 and chest deflection results that were not significantly different. We have not engaged in studies to assess the far-side performance of CRSs so we cannot confirm the findings of the study cited by Mr. Hauschild.

less than 29.5 kg (65 lb). These commenters argued that this restriction on CRAS use will likely produce a trend toward increased use of seat belts to install CRSs, particularly forward-facing CRSs and restraints recommended for heavier children. The commenters argued that NHTSA's not requiring testing of the seat belt installation would overlook this prominent mode of use. However, CU stated, as did JPMA and Britax,[200] that testing with Type 1 (lap only) belts should not be considered as lap belts are rarely seen in current model vehicles. They further argued that a lap belt test is not necessary because most CRSs are designed so that the lap belt attachment and loading path are the same as those used by CRAS straps.

NTSB commented that parents or caregivers may choose to install a CRS using the vehicle's seat belt for many reasons, including ease of installation and a lack of seating positions with lower CRAS attachments. NTSB stated that an analysis of 79,000 CRS checklist forms by Safe Kids USA confirmed that approximately 60 percent of the examined CRSs were installed with seat belts. The commenter believed that, given the prevalence of seat belt installations, safety would be better served by requiring the CRS to be tested under all vehicle securement conditions. Furthermore, NTSB argued, because the proposed rule focused on assessing the capability of the CRS to maintain its structural integrity, requiring the restraint system to be tested in all installation options would ensure the strength of the entire seat system, including the multiple routing options for various types of seat belts. NTSB added that, because the dynamics of the CRS interaction with the intruding vehicle door are integral to the test, the orientation of the seat at the point of impact may affect the kinematic response of the dummy. NTSB argued that varied installation options may result in slightly different seat orientations when the seat interacts with the intruding door, which will affect the outcome of the test. NTSB concluded that testing all installation options would further ensure that CRSs provide adequate safety.

---

[200] Britax stated that requiring testing under FMVSS No. 213a with the Type 1 belt installation would unnecessarily increase the efforts and expense of testing, with minimal real-world benefits.

NTSB further argued that, since the testing cost estimated by NHTSA is less than $0.01 per CRS, requiring manufacturers to conduct the same tests under three securement conditions—CRAS, Type 1 seat belts, and Type 2 seat belts—would not be burdensome, and would be well worth the effort to ensure that the CRS provides the intended level of side impact protection, regardless of how it is attached to the vehicle. NTSB encouraged NHTSA to revise the proposed rule to require testing with the CRS attached to the SISA using the lower anchorage attachments, a Type 1 seat belt, and a Type 2 seat belt.

In contrast to the above, IIHS and Graco stated that testing only with the CRAS configuration was sufficient. IIHS believed it was reasonable to forgo testing with lap and shoulder belts as NHTSA found no meaningful difference in performance in preliminary testing comparing CRSs attached with lower anchors with those attached with seat belts. Based on NHTSA's results showing that Type 2 CRS installations perform the same as CRAS CRS installations, Graco recommended only testing with CRAS.

Dorel did not expressly recommend CRAS or seat belt installation for testing, but provided data indicating CRAS testing showed little difference in the HIC and chest deflection data when compared to Type I (lap) tests.[201]

Agency Response

After considering the comments and other information, NHTSA has decided there is a safety need to assess CRSs performance in a Type 2 belt test in addition to the CRAS test. Based on a review of the comments and an assessment of current CRS designs, NHTSA concludes that both tests are necessary to evaluate CRS performance properly, particularly regarding the structural integrity of the restraint when subjected to crash forces imposed on the restraint using the different loading paths.

[201] NHTSA-2014-0012-0045, at pg. 6.

Among NHTSA's preliminary tests for the NPRM[202] were four (4) paired tests to compare CRS performance when installed with lower anchors and with 3-point (Type 2) seat belt. Paired comparisons showed that HIC15 and chest deflection results with the different installation methods were not significantly different ($p>0.05$), as seen in Table 19, below.

Table 19. Paired Test Results for Comparing the Performance of CRSs Installed Using Lower Anchors (LA Only) and Using 3-Point Lap-Shoulder Belts (SB3PT).

[202] *See* Sullivan et al. (2013) for results of these tests.

Database Test No.	Dummy	CRS	Orientation	Attachment Method	HIC15	Chest Deflection [mm]	Head-Door Contact
9624	Q3S	Graco Comfort Sport	RF Convertible	LA Only	729	26.9	Yes
9622	Q3S	Graco Comfort Sport	RF Convertible	SB3PT	793	23.1	Yes
8260*	Q3s	Graco My Ride	RF Convertible	LA Only	751	25.0	No
8264*	Q3s	Graco My Ride	RF Convertible	SB3PT	681	31.0	No
8265*	Q3s	Cosco Scenera	RF Convertible	LA Only	748	34.0	Yes
8266*	Q3s	Cosco Scenera	RF Convertible	SB3PT	748	28.0	Yes
9633	Q3S	Graco Comfort Sport	FF Convertible	LA Only	579	23.0	Yes
9632	Q3S	Graco Comfort Sport	FF Convertible	SB3PT	649	19.1	Yes
8253*	Q3S	Evenflo Chase	FF Convertible	LA Only	987	20	Yes
8257*	Q3S	Evenflo Chase	FF Convertible	SB3PT	784	25	Yes
8252*	Q3s	Evenflo Triumph Advantage DLX	FF Combination	LA Only	446	16.0	No
8256*	Q3s	Evenflo Triumph Advantage DLX	FF Combination	SB3PT	479	13	No
8258*	12MO	Graco My Ride	RF Convertible	LA Only	755	N/A	No
8261*	12MO	Graco My Ride	RF Convertible	SB3PT	748	N/A	No
9626	12MO	Combi Shuttle	RF Infant	LA Only	478	N/A	Yes
9625	12MO	Combi Shuttle	RF Infant	SB3PT	438	N/A	Yes
9628	12MO	Safety 1st OnBoard 35	RF Infant	LA Only	625	N/A	No
9627	12MO	Safety 1st OnBoard 35	RF Infant	SB3PT	615	N/A	No
8259*	12MO	Combi Shuttle	RF Infant	LA Only	450	N/A	Yes
8262*	12MO	Combi Shuttle	RF Infant	SB3PT	521	N/A	Yes

*Preliminary tests from NPRM.

Note: SB3PT means 3-point belt, *LA Only* means lower anchorages of the child restraint anchorage system, RF means rear-facing and *FF* means forward-facing.

It was on those data that NHTSA made a preliminary determination that the differences in performance of the restraints were not significant based on the method of installation. However, NHTSA now agrees that testing a CRS in both installation modes (using CRAS and a Type 2 (lap and shoulder) belt) will more appropriately evaluate CRS performance, including

structural integrity, under the different loading paths in a CRAS installation and in a seat belt installation.

The agency agrees with the commenters supporting inclusion of a Type 2 belt attachment test that, while many CRSs share the same belt paths for lower anchorages and seat belt installations, there are some CRSs that do not (such as CRSs that use a rigid CRAS lower attachment or like the Britax Clicktight seats[203]). Testing in both attachment modes is needed for a more effective evaluation of the side loading of the CRS in a side crash, as the different points of attachment of the CRS to the vehicle seat and the different routing paths of the vehicle seat belt through the CRS can affect how the CRS is loaded by the seat belt during the side impact event.

NHTSA also agrees with commenters that testing with a Type 2 belt configuration is appropriate because of the CRAS weight restrictions. Under current FMVSS No. 213, child safety seats manufacturers must instruct owners not to use the CRAS lower anchors if the mass of the seat, combined with the mass of the child for whom the CRS is recommended, exceed 29.5 kg (65 lb). Caregivers are instead instructed to use the vehicle's belt system to install the CRS. As the provisions of FMVSS No. 213 envision Type 2 belt installations as vital to CRS installations, it is prudent for the agency to adopt a Type 2 belt test in FMVSS No. 213a to ensure all safety seats for children weighing less than 18.1 kg (40 lb) provide adequate side impact protection. Further, data show that a substantial portion of caregivers in the field use seat belts, rather than CRAS, to install CRSs.[204] For the above reasons, adopting a Type 2 belt test in addition to a CRAS test best meets the MAP-21 mandate to improve the protection of children seated in CRSs in side crashes.

---

[203] ClickTight Installation Systems in Convertible Car Seats, Britax, https://web.archive.org/web/20201201232308/https://us.britax.com/product-knowledge/articles/clicktight-convertibles/

[204] NCRUSS found that 34% of rear-facing infant carriers, 23% of rear facing convertible and 44% of forward-facing CRSs were installed with seat belts.

As to the type of belt system, NHTSA believes that just a Type 2 belt test is appropriate, not both a Type 1 belt (lap belt) test and a Type 2 belt test. NHTSA agrees with CU and Britax that a Type 1 seat belt configuration is rare in the light passenger vehicle fleet and should not be adopted as a test configuration for lack of a safety need for such a test. In the November 2, 2021 NPRM upgrading the frontal impact sled test, NHTSA proposed to use a Type 2 seat belt instead of a Type 1 seat belt for the same reasons, i.e., Type 1 configurations are mostly unavailable in the vehicle fleet.[205] Given the prevalence of Type 2 belts in the rear seats of current passenger vehicles, testing CRSs with the type of seat belt caregivers would be using better ensures the representativeness of the compliance test.

In supporting use of a Type 2 belt test, UPPAbaby also asked about a "carrier only configuration," and suggested "this should be taken into account as a possible use situation, and added to the proposed rulemaking, again using a Type II [sic] belt configuration." NHTSA understands the commenter as suggesting that FMVSS No. 213a should require infant carriers designed with a detachable base to be tested without their base in a Type 2 belt. The agency will test infant carriers with bases with CRAS and with a Type 2 belt, but, for now, the agency has decided not to test the carriers without their bases. The agency conducted two tests of infant carriers with no base (Evenflo Discovery and Combi Shuttle) and both showed no head to door contact. The agency has not conducted extensive testing on infant carriers without the base, but the testing suggests that infant carriers can meet the standard with and without a base. Thus, NHTSA does not find justification to add another test of the restraints to check performance of the carriers when the base is not used.

The drawings for the SISA that were placed in the docket for the NPRM show the proposed Type 2 seat belt configuration. The final version of the drawings incorporated by reference by this final rule also depict the Type 2 seat belt anchorages.

---

[205] The NPRM also proposed to amend FMVSS No. 213 to require child restraints to meet the requirements of Standard No. 213 when attached by the Type 2 belt and to remove the requirement that CRSs must meet the standard when attached by a Type 1 (lap) belt.

MGA commented that the NPRM did not include provisions about the configuration of the belt anchor on the inboard side of the lap belt of the Type 2 belt for Type 2 installation configurations. MGA stated that FMVSS No. 213 requires the belt anchor to lock the belt, while a similar Transport Canada standard (Canadian Motor Vehicle Safety Standard No. 213) incorporates a freely-sliding belt anchor.[206] MGA argued that, since most vehicles in the fleet have a free-sliding belt buckle tongue on the inboard side, it makes more sense to replicate this condition. MGA suggested that, if the Type 2 belt in FMVSS No. 213a were to have a freely-sliding belt anchor, FMVSS No. 213 should be updated in the future as well.

The final drawing package of the SISA details the design of the belt anchorages and hardware used in the Type 2 seat belt installations, as they will be part of the FMVSS No. 213a configuration. The final drawing package incorporates an inboard freely sliding belt anchor as suggested by MGA, to replicate real-world conditions. Most vehicles in the fleet have a freely sliding belt anchor. The proposed changes to FMVSS No. 213 (frontal sled test) set forth in the November 2, 2020 NPRM also describe an inboard freely sliding belt anchor. NHTSA is currently considering the comments to the November 2, 2020 NPRM.

ii. Tethered vs. non-tethered CRS installation

The NPRM proposed that the agency would attach the top tether of the safety seat if a tether were provided and the owner's manual instructs the caregiver to attach it.

Comments on whether the top tether should be attached during testing were mixed. Some commenters suggested that testing without the top tether would be representative of real-world CRS installation in vehicles, as only about half of CRSs are installed using the top tether. Other commenters recommended testing with the tether, notwithstanding real-world use of the tether. Those commenters generally supported use of informational and educational campaigns

[206] A freely sliding belt anchor is a load bearing device through which the seat belt webbing may freely pass and change direction. The belt anchor is bolted to the SISA. The freely sliding belt anchor is similar in design and function to a guide loop used to properly position the torso portion of the webbing of a driver's seat belt.

to encourage tether use. Some commenters recommended testing both with and without the top tether attached, as is done under the frontal impact test of FMVSS No. 213.[207]

After considering the comments, NHTSA has decided to adopt the proposed procedure to test forward-facing CRSs with the tether attached, as test results showed that the use or non-use of the tether does not produce significantly different results in the side impact test environment. Each installation issue is discussed in turn below.

Comments Received

Many commenters recommended testing forward-facing CRSs without the top tether attached. These included IIHS, UMTRI, Safekids, and SRN. Several proponents of an untethered test pointed to studies showing that tether use is low. IIHS discussed that observational surveys have found that about half of all forward-facing CRSs are installed without using the top tether[208] and that the dynamic performance of CRSs changes when the top tether is used.[209] IIHS stated that because tether non-use is common in the field, dynamic testing of CRSs should include a no-tether condition to ensure any countermeasures developed as part of the testing program would be effective at reducing injuries under those circumstances. SRN stated that, if the tether makes little difference in a near-side impact as had been asserted, it is necessary to know more about the relative effectiveness between both installation methods.[210] SRN also wanted to know if the conclusion that the tether has little effect in performance on a near-side impact was made based on comparison testing done with tether anchors mounted in different locations. SRN believed if there is truly no benefit provided by the tether in a side impact, then it suggests adopting an untethered test.

Some commenters suggested both a tethered and untethered test. Mr. Hauschild suggested that for seats that have a tether, they should be tested both with and without the tether.

---

[207] A more stringent head excursion requirement applies in the test in which the tether is attached.
[208] Citing Cicchino & Jermakian 2014, Decina & Lococo 2007, Eichelberger et al. 2014, Jermakian & Wells 2011, O'Neil et al. 2011.
[209] Citing Kapoor et al. 2011, Lumley 1997, Menon & Ghati 2007.
[210] SRN attributed this assertion to NHTSA but the statement is not in the NPRM.

The commenter explained that consumers are likely to use the CRS both ways, there may be different kinematics of the dummy, and that many older vehicles still on the road today may not have an upper anchor for the tether. Advocates recommended that each CRS be required to pass the proposed testing under all installation conditions permitted by the manufacturer for the specific restraint.

In contrast to the above, CU, NTSB, Dorel, Britax, Graco, and JPMA recommended testing with the tether attached. CU supported the use of the top tether for testing all forward-facing CRSs, stating that the tethers provide benefits in stabilizing and reducing head excursion in frontal crashes, and that additional education and information should be extended to encourage tether use. CU stated that its frontal test protocol plans to test all forward-facing CRSs with top tethers attached.

NTSB noted that the current correct usage rate for the top tether is low – approximately 59 percent – in passenger vehicles, minivans, light trucks, and sport utility vehicles. NTSB agreed that forward-facing CRSs should be tested with the top tether, as recommended by the manufacturer, but urged NHTSA to encourage both vehicle and CRS manufacturers to increase the ease of use for top tethers. Dorel supported the requirement that the top tether be attached during the side impact test. Dorel stated that their data showed little difference between struck near side ATD data between tethered and untethered tests. Dorel added that the inclusion of untethered tests may not provide additional meaningful information of the contact-side of the test configuration and the resulting HIC scores.

Britax also supported the use of tethers during side impact testing. Britax explained that, similar to the effect of deep side wings and impact absorbing foam, the use of the tether enhances the performance of the CRS during side impact by reducing the lateral movement of the CRS, and this reduction in lateral movement assists in containing the head within the CRS. Britax stated that requiring side impact testing without the use of the tether would unreasonably deny CRS manufacturers the benefits of tether technology, as opposed to frontal impact testing of

CRS (where the CRS is tested with and without the tether), especially in the context of the unique lateral forces generated in the side impact testing protocol. Britax concluded that using the tether diminishes the potential for head injury.

Dorel and JPMA commented that they did not see any relationship between HIC15 scores in paired tests of two CRS models installed using CRAS (with tether) and with a Type I seat belt without the tether attached.[211] Graco stated that it always recommends the use of the top tether when installing a forward-facing CRS. Graco added that it does not believe there is any benefit in conducting the side impact test both with and without the top tether.

Agency Response

NHTSA performed two paired tests to evaluate the effect of the use of the tether in the proposed side impact test. Two tests were performed using the tether and two without the tether, as shown in **Table 20**. Paired comparisons showed that the tests results (HIC and chest deflection) with and without tether were not significantly different ($p>0.05$).

Table 20. Comparison of CRS Performance in Tests of CRSs Installed with and without Tether with the Q3s dummy.

VDB Test No.	CRS	Orientation	Attachment Method	HIC 15	Chest Deflection [mm]	Contact
9630	Graco Comfort Sport	FF Convertible	CRAS	640	21.1	Yes
9631	Graco Comfort Sport	FF Convertible	SB3PT&T	580	18.6	Yes
9633	Graco Comfort Sport	FF Convertible	LA Only	579	23.0	Yes
9632	Graco Comfort Sport	FF Convertible	SB3PT	649	19.1	Yes

Note: SB3PT means 3-point belt, *SB3PT&T* means 3-point seat belt and tether, *CRAS* means the full child restraint anchorage system, *LA Only* means lower anchorages of the child restraint anchorage system, and *FF* means forward-facing.

[211] NHTSA-2014-0012-0045, at pg. 6.

While tether use is extremely important in frontal crashes, in near-side impacts the impact happens so quickly that the tether is never engaged as the struck vehicle door intrudes into the seat compartment. Due to this fact, and the results in the above table showing that the use or non-use of the tether does not produce significantly different results in the FMVSS No. 213a side impact test environment, NHTSA will test forward-facing CRSs with the tether attached.

Testing forward-facing CRSs with the tether attached will help minimize any potential variability in test results due to setting up the CRS while allowing a thorough evaluation in side impact of all countermeasures provided by the CRS. Testing with and without tether, as suggested by some commenters, would be unnecessarily burdensome as the CRS would perform the same way in both tests. Since the performance of the CRS when installed with or without the tether is not significantly different, the test still ensures good performance in the field even when tether use is low.

NHTSA notes that frontal sled tests of forward-facing CRSs with and without tether have different performance as the use of a tether results in improved injury values compared to the un-tethered tests. Therefore, the need of testing in both conditions is necessary to ensure their performance at two different stringency levels (i.e. head excursions 813 mm for untethered test and 720 mm for tethered test) in a frontal impact and ensure the safety of the CRS whether they are used with or without the tether. While the top tether is used, if available, during the side impact test procedure, in forward-facing CRSs, this does not negate in any way the need to meet frontal requirements, both with and without a tether.

Separate from this rulemaking, and as discussed further below, the agency is currently working on potential improvements in tether use by improving the marking of tether anchorages

in vehicles.[212] The purpose of the marking is to increase consumer awareness of the existence of tether anchorages and to facilitate consumer education efforts.

With respect to SRN's request to conduct tests with tethers mounted in different locations, NHTSA selected the tether location on the SISA based on the vehicle survey. Thus, it is highly representative of where tether anchorages are located in vehicles. Since tether use or non-use does not affect the performance of the CRS in the side impact test, the agency believes the tether anchorage position will not influence the performance of the CRS in the near-side impact environment selected for FMVSS No. 213a. Thus, there is insufficient need to vary the location of the anchorage in the test.

NTSB urged NHTSA to encourage both vehicle and CRS manufacturers to increase the ease-of-use of top tethers. NHTSA's January 23, 2015 NPRM, *supra*, proposed to amend FMVSS No. 225, "Child restraint anchorage systems," to improve the ease-of-use of the lower anchorages of child restraint anchorage systems and the ease-of-use of tether anchorages.[213] The NPRM also proposed changes to FMVSS No. 213, "Child restraint systems," to amend labeling and other requirements to improve the ease-of-use of child restraint systems with a vehicle anchorage system. The NPRM, issued in response to MAP-21, proposed changes to Standards No. 213 and 225 to increase the correct use of CRSs and child restraint anchorage systems and tether anchorages, with the ultimate goal of reducing injuries and fatalities to restrained children in motor vehicle crashes. NHTSA is continuing its work on this rulemaking. The Fall 2021 Agenda notes that a final rule is planned for March 2022.

iii. Distance between edge of armrest and edge of seat

NHTSA proposed to specify in the test procedure that: (a) the CRS would be centered on the sliding seat; and (b) that the front face of the armrest on the door would be approximately 32

---

[212] In response to MAP-21, on January 23, 2015, NHTSA published an NPRM to improve the usability of child restraint anchorage systems, including standardizing and clarifying the marking of tether anchorages (80 FR 3744). The RIN for the rulemaking is 2127-AL20. It may be tracked in the Unified Agenda of Regulatory and Deregulatory Actions (Agenda).
[213] 80 FR 3744 (Jan. 23, 2015).

mm (about 1.25 inches) from the edge of the sliding seat towards the CRS at the time the honeycomb interacts with the sliding seat structure. The prescribed positions of the CRS (centered 300 mm (about 12 inches) from the edge of the seat), and the armrest from the edge of the seat at the time the door first interacts with the sliding seat structure, results in the intruding door contacting wider CRSs earlier in the event than narrower CRS. This contact of the intruding door earlier in the event to wider CRSs results in a higher door impact velocity to the wider CRSs than to narrower CRSs, which is an outcome representative of how different CRS designs would perform in a specific vehicle in the real world. On the other hand, NHTSA sought comment on whether the distance of the front face of the armrest from the edge of the sliding seat at the time the sliding seat starts to accelerate should be varied, such that all CRSs, regardless of their width, would contact the impacting door at the same time and with the same initial impact speed.

Comments Received

Comments were divided on this issue. Advocates recommended that the distance between the CRS and the armrest be varied so that all CRSs, regardless of their width, contact the impacting door at the same time and with the same initial impact speed. Advocates stated that since the premise of the proposed testing is a component level test of the CRS (rather than the CRS and a given vehicle combination, as in a full-scale test), this change would ensure that all CRSs are subject to the same conditions. The commenter believed that, given the wide range of vehicle designs in which a CRS may be installed, artificially allowing CRS design specifications, such as width, to influence the conditions of the test would be inappropriate. Advocates suggested that NHTSA establish a reasonable specified distance between the armrest and CRS through a vehicle survey and by testing. The distance should represent the most common and most appropriate distance for the test protocol, while also providing the most stringent performance test for CRSs in use today.

Dorel and JPMA commented that both approaches (keeping the distance constant, or varying the distance to account for CRS width) each have their unique conditions for introducing variability into the test, which can drive CRS designs to be either wide or narrow to obtain the best HIC measures. In support of this statement, Dorel provided a chart comparing wide and narrow forward-facing (FF) CRSs installed with lower anchorages of the CRAS and tethered, or with a belt and untethered. These tests kept a constant distance of the front face of the armrest from the edge of the seat at T_0. In the tests, the wider CRS had lower chest deflection results compared to the narrower CRS.[214]

Dorel and JPMA believed that keeping the distance constant from the front face of the armrest from the edge of the seat at the time the sliding seat starts to accelerate, as proposed, could more accurately reflect the consistent centering of the seating position between the anchors to the door. Dorel and JPMA explained that this also naturally aligns the center of the ATD with the center of the anchorages as well and the ATD's distance to the door, and that it could drive CRS designs to optimize on this condition, which would favor wider CRS designs. Dorel added that the ATD forward head movement discussed in its comment also enters more prominently in this condition. Dorel also commented that the distance between the armrest and the CRS has the potential to catch the door during the run up in acceleration phase very differently, which could result in manufacturers developing narrower CRSs as they would couple sooner in the event at a lower velocity.[215]

Dorel stated that the second option (distance varied) is a more stable and repeatable condition, while option 1 (distance kept constant) would introduce significant differences in testing conditions. Dorel stated that the test should replicate conditions that would drive CRS

---

[214] NHTSA-2014-0012-0045, at pg. 6.

[215] NHTSA understands this comment to be stating, in this context, narrower CRSs would be in contact (couple) with the door/armrest at a lower velocity than a wider one, as a wider one will come in contact with the door/armrest sooner. While CRS to door/armrest contact is happening, the velocity is decreasing so the velocity that a narrower CRS experiences is lower than a wide one.

designs to yield meaningful and measurable countermeasures to side impact injury mechanisms. Dorel concluded the test must replicate real world conditions.

CU commented that the distance of the front face of the armrest from the edge of the seat at the time the sliding seat starts to accelerate should be kept constant. CU explained that, unlike in a frontal crash, prior to which the front seatbacks can be moved to provide additional spacing for a CRS, the distance to a door in an actual vehicle will be fixed and cannot be altered. For this reason, CU recommended leaving the door/armrest at a fixed distance. CU stated that the width of CRSs would determine the point and velocity at contact with that door, which would best simulate that same condition in a real vehicle crash. In contrast, CU stated that a distance that is altered to be equal for all CRSs would not simulate such real-world conditions.

UMTRI favored the proposed test condition that all child restraints be placed on the same pretest location on the bench, such that the loading panel will contact wider child restraints before it would contact narrow ones, as this represents a realistic vehicle situation. UMTRI added that this may encourage child restraint manufacturers to design narrower seats that would fit better in adjacent vehicle seating positions.

Britax also recommended that the distance not be varied such that all CRSs regardless of width contact the door within similar time and velocity requirements. Britax explained that varying the distance defeats the purpose and benefits of "filling the gap" and would discourage the use of impact technologies that may result in CRSs that enhance side impact energy management. Britax stated that this would serve the contrary purpose of enabling CRS with less energy management features to compare favorably with products that provide otherwise.

Graco also recommended using a constant CRS centerline position, as proposed, regardless of the CRS base width. Graco requested NHTSA consider adding a recommended method for confirming that the CRS is centered, such as a visual indicator on the sliding seat to which the CRS can be aligned, to increase repeatability of the test.

As discussed in a previous section, JPMA pointed out that there is an inconsistency between the NPRM's specification for the door foam thickness (51 mm) and the NHTSA drawing package specification (55 mm). JPMA states that this difference in foam thickness specification is significant because "the NPRM includes set-up distances from the face of the door panel to the face of honeycomb material and from the face of the honeycomb material to the centerline of the sliding seat [sic]." JPMA explained that the thickness of the foam is thus an important part of these set-up relationships and needs to be the same in the final rule and the drawing package to help ensure consistent test results between test facilities.

Agency Response

NHTSA believes that having a fixed distance from the front face of the armrest to the edge of the seat towards the seat orientation reference line (SORL)[216] is the appropriate configuration to test CRSs in a side impact. First, NHTSA believes that having a fixed distance at the time of impact is more representative of the real-world vehicle environment than using a varying distance. All CRSs will not be impacted by the door at the same time, as vehicle designs vary and a wider CRS will be impacted by the side door before a narrow CRS in the same vehicle. Maintaining a fixed position of the armrest with respect to the edge of the sliding seat at the time of initial impact of the door assembly with the sliding seat will encourage manufacturers to take into account the width of their safety seats in designing countermeasures to meet FMVSS No. 213a, as the door will impact wider CRSs at a higher velocity than narrower CRSs in the test, as it will in the real world.

Second, a fixed distance works well in a representative generic vehicle environment like the SISA. The FMVSS No. 213 frontal impact sled test also uses a representative generic vehicle environment for the test, and fixed distances are used to assess the performance of the CRS in the frontal impact. In the frontal test, the head and knee excursion limits are fixed with

[216] Seat orientation reference line means the horizontal line through Point Z as illustrated in Figure 1 of the regulatory text section of this final rule.

respect to references on the frontal standard seat assembly regardless of the initial head and knee position of the dummy. Fixing the excursion limits presents a simplified test environment in which CRS manufacturers can design thinner, thicker, or backless products that position the head and knee of the test dummies at different fore/aft positions and use countermeasures appropriate for their CRS to retain the head and knees within the test envelop. Some CRSs will position the head and knee closer to the excursion limits, others might choose to design a thinner back to position the head and knees further away. The fixed excursion limit does not vary with respect to the different CRS design and provides certainty in the parameters of the test environment. On the SISA, the fixed distance will provide manufacturers the ability to decide whether to make narrow CRSs so they are tested at a slightly lower speed or wider by adding different energy absorbing technologies of their choice. Similarly, the window sill height of the SISA, which represents a generic vehicle in the fleet, is fixed and does not change based on the head position of the child dummy in a particular CRS. CRS manufacturers may optimize their design that work best with their side impact technologies.

As Dorel commented, both methods (fixed versus variable distance) have different challenges and difficulties in setup. NHTSA believes that varying the distance between the armrest and the edge of the sliding seat would introduce more variability into the system as the door fixture or the anchorage locations would have to be movable to achieve a variable armrest/edge of sliding seat distance to achieve a CRS to door impact at the same time in all CRSs. Thus, the reduced risk of variability is an advantage of the fixed distance approach over the alternative.

Graco requested NHTSA consider adding a recommended method for confirming that the CRS is centered to increase test repeatability. As described further in the report *FMVSS No. 213 Side Impact Test Evaluation and Revision*,[217] NHTSA used FARO arm measurements in its sled tests to record and align the CRS and dummy with the SISA's SORL. The agency's OVSC

[217] Louden & Wietholter (2022).

compliance test procedure will provide the method that NHTSA will use to center the CRS in the SISA for compliance testing.

JPMA pointed out that because of the inconsistency between the door and arm rest foam thicknesses specifications in the drawing package and the specifications in the NPRM,[218] the set-up distance from the face of the door panel to the face of honeycomb material is also inconsistent from that specified in the NPRM. The NPRM specified that the distance of the front face of the armrest on the door from the edge of the bench seat at the time of contact of the door assembly with the sliding seat of the side impact seat assembly (T_0) (or setup distance for this discussion) is 32 mm. We agree that the 32 mm setup distance proposed in the NPRM regulatory text is incorrect because it was computed using the manufacturer quoted nominal door foam thickness and not the measured thickness (discussed in a previous section of this final rule preamble). The correct setup distance computed using the measured foam thickness is 38 mm.

NHTSA conducted side impact tests on the SISA to determine the effect of variability in the setup distance on the performance measures. NHTSA tested two CRS models (one in forward-facing configuration and the other in rear-facing configuration) on the SISA using 3 different setup distances. Table 22 shows that even with 12 to 14 mm variation in the setup distance the CV values of the performance measures are very low and in the "excellent" repeatability range. These results suggest that 12 to 14 mm variation in the setup distance does not have significant effect on the performance measures.

Table 22. Test Results for Evaluating the Effect of Variation in the Distance Between the Front Face of the Armrest to the Front Face of the Honeycomb

Test No.	ATD	CRS	Orientation	Restraint Type	Setup Distance [mm]	HIC 15	Chest Deflection [mm]
10285	Q3s	Graco Size4Me 65	RF Convertible	LA Only	37	751	20.7
10116					33	778	23.5

[218] This issue of the discrepancy in the door and armrest foam thickness is discussed previously in the preamble in the section on door characteristics.

10286					47	754	23.3
					Average	761.2	22.53
					STD Dev	12.25	1.27
					CV %	2	6
10277	Q3s	Evenflo Tribute	FF Convertible	CRAS	34	712	21.3
10101					42	760	20.8
10278					46	732	22.0
					Average	734.5	21.4
					STD Dev	19.9	0.48
					CV %	3	2

Note: CRAS means the full child restraint anchorage system, *LA Only* means lower anchorages of the child restraint anchorage system, and *FF* means forward-facing.

Based on these test results, the agency is revising the tolerance for the setup distance from ± 2 mm to ± 6 mm. Therefore, this final rule revises the specified distance of the front face of the armrest on the door from the edge of the bench seat at the time of contact of the door assembly with the sliding seat (T_0) to 38 ± 6 mm. This measurement is consistent with the final drawing package and addresses the errors in the NPRM and proposed drawing package.

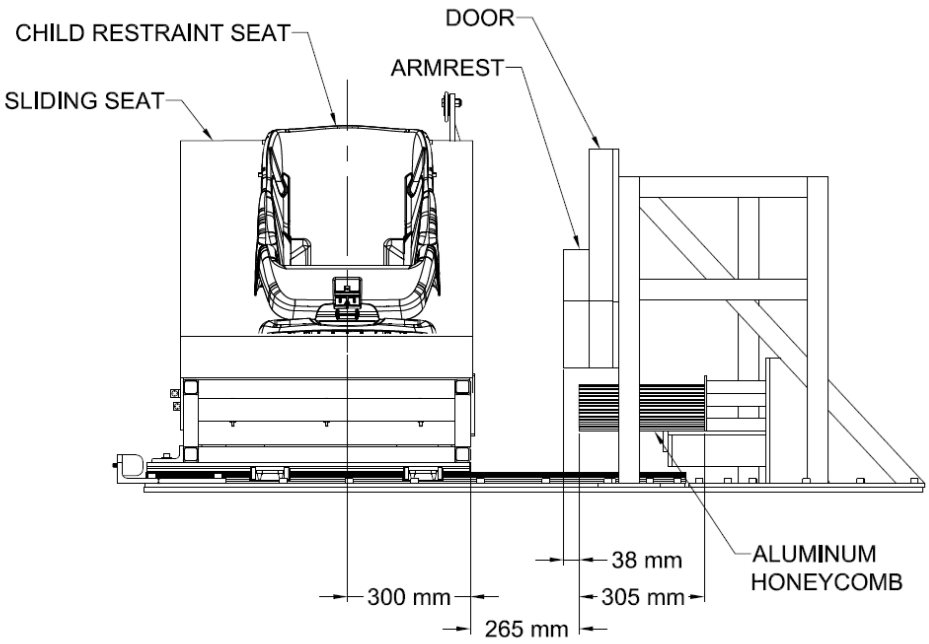

Figure 11. Front View of SISA

e. Dummy positioning

Arm Placement

NHTSA performed a series of tests for the NPRM to evaluate CRS performance with the Q3s dummy, as discussed below. In the tests, NHTSA observed, with regard to dummy positioning, that chest displacements of the Q3s, tested in the same CRS model, were higher when the dummy's arm was positioned in line with the thorax than when the arm was rotated upward so as to expose the thorax to direct contact with the intruding door. NHTSA proposed an arm position at 25 degrees with respect to the thorax, and noted that the Q3s dummy's shoulder contains a detent to aid in this positioning. NHTSA requested comment on this arm position.

Comments Received

We received many comments supportive of arm positioning. Dorel supported the inclusion of an arm positioning specification, stating that it provides additional consistency of setup conditions for repeatability and reproducibility. Graco stated that it has determined that the IR-TRACC measurement (for chest deflection) can change significantly as a function of arm placement. Graco recommended improving the variation in the Q3s chest deflection

measurements. It suggested that a large range (10 mm) it found in chest deflection was due to inconsistent arm placement, and that a more defined set-up practice may reduce these differences. Similarly, TRL commented that the pre-test position of the arm can have a significant effect on the dummy chest deflection readings, and that care should be taken to install the dummy as described in the installation procedure of Standard No. 213a to ensure consistent test results. Advocates stated that the agency should establish an arm position which correlates best with the real-world positioning of children in CRS and injury frequencies observed in available crash data.

Agency Response

The final test procedure specifies that each of the dummy's arms be rotated downwards in the plane parallel to the dummy's midsagittal plane until the arm is engaged on the detent that positions the arm at a 25 degree angle with respect to the thorax, as proposed in the NPRM. This final rule specifies that the agency will position the lower portion of the Q3s arm to be as aligned as possible to the upper arm (25-degrees) that is determined by the detent. If there is interference of the arm with the CRS or dummy body, the lower arm can be slightly bent. VRTC achieved good repeatability with this test procedure it developed.[219]

In response to Advocates, NHTSA is not aware of data that correlates arm position with injury data. However, we believe the arm in the down position would not be an unrealistic positioning of the arm.

Leg Placement

In the NPRM, NHTSA noted that, when testing with the Q3s dummy in a rear-facing CRS, the legs of the dummy were extended upwards and rotated down until they were in contact with the SISA seat back. NHTSA requested comment on the position of the Q3s dummy legs when testing rear-facing CRSs with that dummy.

Comment Received

---

[219] *See* Louden & Wietholter (2022) for more details.

Graco requested that NHTSA specify whether to remove the knee stop bolts when using the Q3s in a rear-facing seat. It explained that currently, testing practices vary between test facilities and should be standardized for consistency. Graco stated no structural damage occurred in its tests when it did not remove the knee stop.

Agency Response

NHTSA will not remove the knee stop bolts when using the Q3s dummy in a rear-facing seat. In the November 2, 2020 NPRM to update the frontal sled test in FMVSS No. 213, NHTSA proposed a procedure calling for the removal of the knee stop in the Hybrid III (HIII) 3-year-old dummy when used in rear-facing CRSs. In tests of rear-facing CRSs with the HIII-3-year-old dummy, the stiff seated pelvis of the dummy causes the dummy's legs to brace against the seat back, resulting in a forward load on the CRS that could push the CRS forward. The agency sought to remove the knee-stops to prevent such bracing of the HIII-3-year-old dummy's legs against the seat back.

In contrast, the Q3s dummy has more flexibility in the pelvic joint than the HIII dummy, which allows the positioning of the legs of the Q3s without the removal of the knee stop. This final rule specifies that each of the dummy's legs be rotated downwards in the plane parallel to the dummy's midsagittal plane until the limb contacts a surface of the child restraint or the SISA.

f. Dummy selection

The January 2014 NPRM proposed using the Q3s dummy and the CRABI 12-month-old dummy to test CRSs under the side impact requirements. Specifically, the NPRM proposed using the Q3s to test CRSs designed for children weighing 10 kg to 18.1 kg (22 lb to 40 lb), and using the CRABI 12-month-old to test CRSs designed for children weighing up to 10 kg (22 lb). These weight categories were designed to be consistent with the criteria used in the current FMVSS No. 213 in determining the test dummies that are used to test child restraints to the standard's frontal test requirements.

In NHTSA's November 2, 2020 NPRM proposing updates to FMVSS No. 213, NHTSA proposed changes to those criteria.[220] The November 2020 NPRM proposed that the Hybrid III 3-year-old test dummy used in FMVSS No. 213 would only be used to test CRSs designed for children weighing 13.6 to 18.1 kg (30–40 lb), and that the 12-month-old CRABI would be used to test CRSs designed for children weighing up to 13.6 kg (30 lb). The agency proposed the change after tentatively concluding that the 3-year-old dummy does not adequately fit CRSs rated for children weighing 10 kg to 13.6 kg (22 to 30 lb), and does not properly represent the children for whom the restraints are intended. The November 2020 frontal upgrade NPRM noted that the 2014 side impact NPRM sought to align the weight cut offs for dummy selection with that of FMVSS No. 213. The November 2020 NPRM requested comment on using the Q3s 3-year-old dummy to test CRSs designed for children weighing 13.6 to 18.1 kg (30–40 lb) in the side impact test and using the CRABI–12MO to test CRSs designed for children weighing up to 13.6 kg (30 lb).[221]

Comments Received

In response to the 2014 side impact NPRM, CU commented that, based on its understanding of the proposed rule (specifically S7.1(b) of proposed FMVSS No. 213a), the agency would use the Q3s to test infant seats. CU disagreed with this proposal, stating that evaluating the side impact performance of infant seats using the Q3s dummy is likely to misrepresent those seats' protective features, as the Q3s is technically too tall for those seats. CU was concerned that, with the dummy's head extended far above the seat's shell, side impact protection within the shell will not "register" in the dummy's measured head dynamics. Based on its limited tests, CU observed that the Q3s head exceeding the shell height may result in decreased HIC values, thereby "overrating" the seat's side impact protection. CU stated that this potential to achieve lower HIC numbers could influence manufacturers to "design for the test"

[220] 85 FR 69388, *supra*. See Section IX, 85 FR 69429.
[221] 85 FR at 69436.

rather than for real-world child and CRS interactions, which could have negative implications. For instance, manufacturers could reduce shell heights or containment attributes, which could improve side impact regulatory test results but potentially reduce performance in real-world crashes.

CU stated that NHTSA may not have seen this interaction issue with the Q3s and infant seats, as the test development results discussed in the NPRM indicated that the rear-facing seats tested with the Q3s were all convertible seats, not infant seats. Infant seats were only tested in NHTSA's tests with the CRABI 12-month-old dummy, even though the current child seat market includes infant seats that would meet the NPRM test thresholds requiring the Q3s (S7.1). The commenter did not believe the side impact pulse produces a level of energy that will result in a high number of structural failures and stated that, given the Q3s dummy size and limited potential for assessing structural failure, the Q3s dummy has little value for assessing side impact protection in infant seats. CU said that, in its own test methodology, it uses larger-weight dummies that may exceed shell accommodations to evaluate the structural integrity of seats, rather than injury metrics. CU believes an alternative side impact instrumented dummy should be considered for infant seat testing that would more appropriately represent real-world usage and provide biofidelic injury values.

Similarly, UPPAbaby recommended against using the Q3s dummy to test rear-facing infant seats, because, it stated, "the head of the Q3s exceeds the limit to which we recommend a child be positioned in our seat."

Comments to the November 2, 2020 frontal upgrade NPRM supported the proposed dummy selection weight and height criteria and the alignment of the applicable dummy selection for both frontal and side impact tests. Four commenters (IMMI, Salem-Keiser, Graco and Volvo) supported the proposed dummy selection changes. Two commenters (Safe Ride News and Graco) expressed support for having the same dummy selection criteria in both standards.

Consumer Reports[222] (CR) reiterated its comment to the side impact NPRM (summarized above) where it argued that the CRABI-12 MO should be used to evaluate infant CRSs with recommended weights over 30 pounds as the 3-year-old dummies are too big for these CRSs.

Agency Response

To better align the dummy selection for the side impact test with the size and weight of children typically restrained in the CRS, this final rule adopts the use of the CRABI-12-month-old to test CRSs designed for children weighing up to 13.6 kg (30 lb) and that of the Q3s (3-year-old dummy) to test CRSs designed for children weighing 13.6 to 18.1 kg (30 to 40 lb). These specifications are aligned with the proposed ranges for the FMVSS No. 213 frontal impact test in the November 2, 2020 NPRM. Table 23 below shows the ATD use adopted for the side impact test based on the child weight and height recommendation for the CRS.

Table 23. Amendments to ATD Use Based on Manufacturer's Weight and Height Recommendations (Adopted by This Final Rule)

CRS Recommended For Use by Children of These Weights and Heights--	Are Compliance Tested by NHTSA With These ATDs (Subparts Refer to 49 CFR Part 572)
5 kg (11 lb) to 13.6 kg (30 lb) in weight 650 mm (25.5 inches) to 870 mm (34.3 inches) in height	CRABI-12-Month-Old (subpart R)
Weight 13.6 kg (30 lb) to 18.1 kg (40 lb) Height 870 mm (34.3 inches) to 1100 mm (43.3 inches)	Q3s 3-Year-Old Child Dummy (subpart W)

The changes in weight and height dummy selection criteria address Consumers Union (Consumer Reports) and UPPAbaby's concerns that testing infant seats with the Q3s dummy would position the dummy's head higher than the manufacturer's recommended use of the restraint. In the November 2, 2020 frontal upgrade NPRM, NHTSA explained that the current CRS market encompasses infant carrier models recommended for children weighing up to 10 kg

[222] Consumer Union is the Policy and Action Division of Consumer Reports.

(22 lb), 13.6 kg (30 lb), 15.8 kg (35 lb), and 18.1 kg (40 lb) and with child height limits ranging from 736 mm (29 inches) to 889 mm (35 inches). Under current FMVSS No. 213 and the FMVSS No. 213a NPRM, these infant carriers would be subject to testing with the HIII-3-year-old or Q3s (35 lb) dummy. However, as commenters have pointed out, the HIII-3-year-old or the Q3s dummy do not fit easily in infant carriers and have limitations as test devices to evaluate the restraints.

Given the purpose of infant carriers, NHTSA concludes there is not a safety need warranting a redesign to accommodate a 3-year-old dummy. Current infant carriers are convenient to use with infants and are popular with parents and other caregivers. The availability and ease-of-use of current carriers may result in more infants riding restrained, and rear-facing, than if the carriers were heavier, bulkier and more expensive. NHTSA does not believe that the infant carriers are used frequently for children weighing more than 13.6 kg (30 lb). Information from child passenger safety technicians involved in child restraint system checks indicates that infants usually outgrow infant carriers because of reaching the height limit of the carrier, rather than the weight limit. Further, as an infant reaches a 13.6 kg (30 lb) weight,[223] the combined weight of the infant and the infant carrier becomes too heavy for a caregiver to pull out of the vehicle easily and carry around by a handle. Therefore, caregivers typically switch to a convertible or all-in one CRS as the child weight increases. A 13.6 kg (30 lb) maximum weight threshold for infant carriers would accommodate all 1-year-old children (the average 97th percentile 1-year-old weighs 27.2 lb (12.3 kg)).

The changes on dummy selection criteria would still allow a manufacturer to continue marketing its infant carrier for children weighing more than 13.6 kg (30 lb), but we anticipate manufacturers will not exceed the 13.6 kg (30 lb) weight threshold. Practically speaking, children weighing more than 30 lb[224] would be too old (no longer an infant), heavy and tall to

[223] An average 97th percentile 1-year-old is 12.3 kg (27.2 lb).
[224] An average 97th percentile 2-year-old is 15.3 kg (33.9 lb).

easily fit an infant carrier. Nonetheless, if an infant carrier were recommended for children weighing more than 13.6 kg (30 lb), NHTSA would test it with the 3-year-old child dummy, and the manufacturer would be required to certify that the CRS can meet the performance requirements of the FMVSS when tested with the 3-year-old dummy.

g. Miscellaneous comments on the test procedure, including test setup, sled instrumentation, and data processing

For the NPRM, NHTSA placed a technical report, "Child Restraint Side Impact Test Procedure Development" (2013), in the docket which detailed NHTSA's testing with regards to the sled test. MGA and Graco provided feedback on or requested clarification of different aspects of the proposed test procedure.[225]

High-speed camera views

MGA was concerned that no high-speed camera views were specified in FMVSS No. 213a. MGA stated that off-board cameras will require fewer structural elements to hold the cameras in place, which would aid in the ease of construction for new equipment. In response, NHTSA is providing guidance for use of high-speed cameras. NHTSA's technical report, "FMVSS No. 213 Side Impact Test Evaluation and Revision,"[226] details VRTC's high-speed camera views that it used in the development of the test protocol.[227] The compliance test procedures developed by NHTSA's Office of Vehicle Safety Compliance (OVSC) will describe

---

[225] The test procedure set forth in FMVSS No. 213a describes the procedure NHTSA will use to conduct its compliance test. NHTSA's Office of Vehicle Safety Compliance (OVSC) issues a Test Procedure (TP) that provides more detailed information to its contractors about running the compliance test. However, under the Safety Act, manufacturers self-certify the compliance of their vehicles and equipment with all applicable FMVSSs; they are not required by NHTSA to conduct the test described in the FMVSS or TP to certify the compliance of their products with the FMVSS. Instead, manufacturers must ensure that, when NHTSA conducts the test described in the standard and TP, the vehicle or equipment will meet the requirements in the standards. While not required to do so, manufacturers generally self-certify their products by using the test procedures set forth in the FMVSSs and TPs. This is because running the same test better ensures that the vehicle or equipment will perform in a manner that meets the FMVSSs requirements when tested by NHTSA, compared to a different test the manufacturer had used to make the certification.

[226] Louden & Wietholter (2022), *supra*.

[227] VRTC's onboard camera fixtures are not part of the drawing package, as test facilities are not required to use cameras. If they use cameras, they may choose to use onboard or off-board cameras with the same views (or any other position of their choosing).

the camera positions that OVSC will use in its testing, which test facilities can use in developing their FMVSS No. 213a test protocols.

Belt tension

MGA commented that the internal harness tension in FMVSS No. 213a is specified as "not less than 9 N," while in FMVSS No. 213 it is specified as "Tighten the belts until a 9 N force applied to the webbing at the top of each dummy shoulder and to the pelvic webbing 50 mm on either side of the torso midsagittal plane pulls the webbing 7 mm from the dummy."

NHTSA concurs that FMVSS No. 213a should specify an upper limit for tensioning internal harnesses, to have consistency in testing. Therefore, NHTSA is also including an upper limit to this internal harness tension. This final rule adopts a provision in FMVSS No. 213a that specifies the internal harness tension as "not less than 9 N but not more than 18 N." This wording would be consistent with the FMVSS No. 213 instruction discussed in the November 2, 2020 NPRM.

MGA also commented that, according to FMVSS No. 213a, booster seats would be tested with a Type 2 seat belt assembly that has the lap belt tensioned to 12 to 15 lb. MGA stated that the current FMVSS No. 213 requires a tension of 2 to 4 lb in both the lap and shoulder belt portion of the assembly. MGA suggested that for FMVSS No. 213a, this tension is revised to be a constant 2 to 4 lb. NHTSA agrees with MGA's suggestion. NHTSA had updated the lap belt tensions when installing booster seats in a 2012 final rule (77 FR 11625) to 2 to 4 lb but had inadvertently used the previous specification of 12 to 15 lb in the NPRM preceding this final rule. We believe the belt tension should be consistent with the current practices, and, therefore, we revised the tension accordingly.[228]

Instrumentation and data collection

---

[228] NHTSA does not anticipate booster seats will be produced that are subject to FMVSS No. 213a. First, NHTSA has proposed a requirement that boosters must be labeled as not suitable for children weighing less than 18.1 kg (40 lb) (85 FR 69388, *supra*). Second, even in the absence of the proposed prohibition on labeling boosters for children under 40 lb, it is unlikely booster seats can meet the requirements of FMVSS No. 213a, so manufacturers will likely label them to fall outside of the applicability of the side impact standard.

With regards to instrumentation and data collection, MGA commented that the NPRM materials specify both integrated accelerometer readings and a velocity trap for producing relative velocity readings between the sliding seat and intruding door. MGA asked which of these is considered the primary means of measurement, and which one is considered secondary.

In response, because of modifications to the test buck design, NHTSA has removed the velocity trap. The integration of accelerometers is the primary source for relative velocity readings, as described in more detail in the technical report, "FMVSS No. 213 Side Impact Test Evaluation and Revision."[229]

MGA also requested additional clarification with regards to the measurement of the acceleration and velocity of the intruding door. MGA asked, since the intruding door and sliding seat assembly are moving at a 10-degree angle, can a traditional sled carriage accelerometer (mounted at 0 degrees on the sled carriage frame) be used to measure the intruding door acceleration, or does it need to be mounted at a 10-degree angle? MGA also asked if this accelerometer should be mounted near the CG of the sled platform or on the intruding door.

In response, the acceleration of the intruding door and the sliding seat perpendicular to the "seat orientation reference line" (SORL)[230] of the sliding seat is used to determine the relative velocity between the door assembly and the sliding seat. If the accelerometer is mounted at 0-degrees on the sled carriage frame, the acceleration measured is multiplied by cosine (10-degrees) to obtain the acceleration perpendicular to the SORL of the sliding seat. The report, "FMVSS No. 213 Side Impact Test Evaluation and Revision," *supra*, details these calculations. The drawing package for the SISA, found in the docket for this final rule, provides information on the location of the accelerometers on the sled carriage with the door assembly and on the sliding seat.

---

[229] Louden & Wietholter (2022).
[230] Seat orientation reference line means "the horizontal line through Point Z as illustrated in Figure 1A" of FMVSS No. 213. 49 CFR 571.213, S4 Definitions.

Also with regard to the accelerometers, MGA commented that dampened accelerometers are a good choice to read the sliding seat acceleration and velocity due to excessive vibration caused from impact with the honeycomb. However, MGA stated that SAE J211 (regarding instrumentation for impact tests, discussed further below) does not have provisions for dampened accelerometers. MGA stated that NHTSA will need to specify a dampening ratio, as the accelerometers used for NHTSA research have a different dampening ratio than the accelerometers used in MGA evaluation testing. MGA asked how the data would be processed for the dampened accelerometer, and would a CFC60 be used for acceleration data and CFC180 for velocity data like for traditional sled accelerometers? MGA also asked if there was a specific location on the sliding seat where the accelerometer should be located.

In response, NHTSA has updated the SISA, as discussed above, which has reduced excessive vibrations, and therefore dampened accelerometers are not used. The locations of the non-dampened accelerometers can be found in the final drawing package and the "FMVSS No. 213 Side Impact Test Evaluation and Revision" report.[231]

Updating references to SAE Recommended Practice J211. The November 2014 NPRM on FMVSS No. 213a proposed to reference SAE Recommended Practice J211, "Instrumentation for Impact Test," revised in June 1980, and proposed that all instrumentation and data reduction conform to J211 (1980). The reference to the June 1980 version was consistent with the current test specifications of FMVSS No. 213. MGA expressed concern over the use of J211 from 1980. MGA stated that J211 is a very commonly used test standard and is updated frequently, and that the it has been updated numerous times since 1980. MGA suggested incorporating J211 from 2014 to reflect the latest revision.

In the November 2, 2020 proposed frontal upgrade NPRM, *supra*, NHTSA proposed updating the reference to SAE Recommended Practice J211(1980) to SAE Recommended Practice J211/1 (1995). The 1995 version was proposed because FMVSS No. 208, "Occupant

[231] Louden & Wietholter (2022).

crash protection," currently refers to the 1995 revision, and the 1995 version of SAE J211/1 is consistent with the current requirements for instrumentation and data processing in FMVSS No. 213. FMVSS No. 208 was important to this decision because its specifications are used in Standard No. 213 regarding testing of built-in child restraint systems. Standard No. 213 has a procedure in which the agency can test a built-in child restraint using an FMVSS No. 208 full vehicle crash test. Accordingly, using the same Recommended Practice J211/1 (1995) in FMVSS No. 213 facilitates the processing of test results when combining a test of built-in child restraints with an FMVSS No. 208 test.

In this final rule, NHTSA has decided to update the reference to SAE Recommended Practice J211/1 (1995) to keep consistency between FMVSS No. 213 and 213a. NHTSA is not adopting the 2014 version of J211 because Standard No. 208 uses the 1995 version, and consistency between FMVSS No. 208 and FMVSS No. 213 is important for testing built-in child restraints.

Measuring head contact of the CRABI

MGA suggested that additional wording would be helpful for measuring the 12-month-old CRABI dummy head contact criterion pass/fail event. MGA stated that common testing practices include chalk or paint on the ATD head or door, or a conductive contact tape with a recorded signal. MGA added that paint and chalk are a relatively inexpensive and accurate way to look at the marks left during the test, but can produce error if not carefully applied. The commenter recommended that a test procedure with a common way of marking should be developed. MGA also stated that contact tape provides a more definitive event but has drawbacks including complexity in setup, and a chance for losing data since it is a recorded signal.

Graco's comment described 42 sled tests, conducted in different labs, using the 12-month-old CRABI dummy to measure head contact with the door structure. Graco's results showed that only one of the six CRSs evaluated produced conflicting head contact performance

across the different test facilities. Graco provided video stills to show the non-repeatable head contact result at the different test facilities, where the camera angle made determination of head contact difficult. Graco suggested that the use of common camera angles and non-video contact methods may help confirm whether contact has occurred. Graco added that the common camera view it would recommend is a top view, approximately 3 feet above the door sill, and that this worked well for both forward- and rear-facing tests and could allow for a consistent determination of the head position from the door foam.

Graco also commented on the non-video options considered in the NPRM, stating that with the contact paint there is possible confusion in determining if paint corresponds to the current test or a previous test. Graco also expressed concern with instrumented contact tape, as the commenter believed that method has not been proven to be repeatable. Graco stated that further development of these options could allow for a more concrete determination beyond video analysis only.

In response to these comments, NHTSA tested several methods to evaluate head containment to address commenters' concerns about different test methodologies. The methodologies included:

- **Wire mesh with foil contact tape.** This method consists of wrapping the CRABI 12-MO dummy's head in a copper wire mesh sleeve and metal foil contact tape applied to the door with double sided duct tape to ensure adhesion to the door as CRS impacts into it. A 1 Volt Voltage is applied to the foil contact tape causing a short circuit when the copper wire mesh makes contact. This results in a Voltage vs. Time plot.
- **Camera View.** Camera coverage is aligned with the edge of the wall to visually witness head to door contact. For forward-facing CRSs NHTSA used a front tight view of the head and door area, and for rear-facing CRSs a tight view from the rear of the seat assembly. The camera placement used during NHTSA's testing is detailed in OVSC's test procedures so that test facilities can replicate the same camera views.

- **Grease Paint.** Grease paint was used on the dummy's head to detect head-to-door contact by paint transfer to the door.

To share information and possibly further the enhancement of test protocols in the future, NHTSA discusses the agency's experience with these tests in the "FMVSS No. 213 Side Impact Test Evaluation and Revision" report. [232] Each method has its strengths and limits. Mesh and contact tape may have set up or equipment failures, and camera views do not always capture the head-to-door contact even when aligned to the door, as some CRSs require a carry-handle to be used in its "carrying" position, which blocks the view of the head and the door. Alternatively, grease paint is sometimes transferred with very light touches. NHTSA's compliance TP will describe how NHTSA/OVSC instructs its contractors to conduct and evaluate head contact in compliance testing. However, NHTSA reiterates it is each manufacturer's responsibility to certify the compliance of its CRSs with FMVSS No. 213a, and that manufacturers may use means or tools other than those described in the report or the OVSC TP to determine whether there was dummy head contact.

h. Additional changes

- Section 9.2(c) of the proposed regulatory text referred to a 178 Newton (N) force that would be applied to the dummy's crotch and thorax using a flat square surface with an area of 2,580 square millimeters. In the final rule, this step has been changed, as applying this force to the Q3s dummy may inadvertently cause the dummy's skin to get tucked in the pelvis.
- Section 6.1.2 (a)(1) of the proposed rule indicated a tension for the tether as not less than 53.5 N and not more than 67 N. During the tests of the FMVSS No. 213 frontal upgrade program (which uses the same seat assembly design as this final rule for side impact), NHTSA found that in some cases the tethers could not be tightened to the proposed tension range because the seat assembly has a thinner seat back cushion (2 inches) than

[232] Louden & Wietholter (2022).

the current FMVSS No. 213 seat. This final rule adopts a tension range of not less than 45 N and not more than 53.5 N. This lower range in tension values for the tether are based on tether tensions achieved in the tests conducted at VRTC and therefore are practicable.

- The application section (S3) was changed to clarify, but not change, its meaning. The revised wording is as follows:

  S3. *Application.* This standard applies to add-on child restraint systems that are either recommended for use by children in a weight range that includes weights up to 18 kilograms (40 pounds) <u>regardless of height</u>, or by children in a height range that includes heights up to 1100 millimeters <u>regardless of weight</u>, except for car beds and harnesses.
- S5(a) and S6.1.1(e) were slightly reworded to make clearer that each child restraint system is required to meet the performance requirements at each of the restraint's seat back angle adjustment positions and restraint belt routing positions, in both the forward and rearward facing installation, as recommended by the manufacturer's instructions.
- Added Section 5.1.6 to indicate the means of installation for which child restraint systems are required to meet the requirements, which include the Type II, Type II plus tether, Lower anchorages, and Lower anchorages plus tether as applicable to the different CRS types.
- S6.1.1(a)(2)(c) was slightly edited to include the word "any" in the requirement before the words pulse and velocity. Here and elsewhere, the word any, used in connection with a range of values or set of items in the requirements, conditions, and procedures of the standard, means the totality of the items or values, any one of which may be selected by the Administration for testing, except where clearly specified otherwise. See Section 571.4.
- Sections 6.1.2(a)(1) through (3) were slightly edited for clarity stating that no supplemental devices are used to install the CRS when testing to FMVSS No. 213a. In

addition, section 5.1.6 was added to specify that CRSs must meet the requirements of the standard when installed solely by each of the listed installation methods. These changes are consistent with FMVSS No. 213 where CRSs are required to meet the standard solely by the installation methods in S5.3.2 and that no supplemental devices (i.e. load leg) will not be used.

- S7.1 and S6.1.2(b) wording was slightly modified to be consistent with S7.1 (a) and (b).

VIII. Performance requirements

NHTSA proposed using the Q3s and CRABI 12-month-old test dummies to test the conformance of CRSs to the side impact requirements. With the Q3s, we proposed to require CRSs to meet performance requirements such that the head injury criterion (HIC) over a 15 millisecond (ms) timeframe was less than 570, and the chest displacement injury assessment reference value (IARV) was less than 23 mm. With the CRABI 12-month-old, we proposed to measure whether there was head-to-door contact only, as the CRABI 12-month-old is a frontal test dummy and was not developed to provide accurate data about the severity of injuries in side impacts.

NHTSA is finalizing a test procedure that utilizes the Q3s and the CRABI 12-month-old dummies and the proposed injury and other performance criteria. After careful consideration of the comments and other information, including data from additional testing with the Q3s, NHTSA determined that the Q3s effectively replicates a child in a side impact and provides a reliable assessment of injury measures in the side impact environment. In addition, although there is currently no infant-sized dummy available specifically for side impact testing, NHTSA concludes that the CRABI 12-month-old is a suitable instrument for assessing the ability of a CRS to prevent head-to-door contact and is an acceptable tool for evaluating important aspects of CRS performance in side crashes.

a. Q3s

The Q3s is built on the platform of the standard Q3 dummy series (the Q-series are frontal ATDs used in Europe), but the Q3s has enhanced lateral biofidelity, durability, and additional instrumentation for specialized use in side impact testing.[233, 234] For instrumentation, the Q3s has three uni-axial accelerometers at the head center of gravity (CG) and an InfraRed Telescoping Rod for Assessment of Chest Compression (IR-TRACC)[235] in the thorax for measuring lateral chest deflection. The Q3s also has a deformable shoulder with shoulder deflection measurement capabilities, arms with improved flesh characteristics, a laterally compliant chest, and a pelvis with improved upper leg flesh, floating hip cups, and a pubic load transducer.[236] Specifications for the Q3s were adopted into NHTSA's regulation for anthropomorphic test devices (49 CFR part 572) on November 3, 2020 (85 FR 69898).[237]

NHTSA cited several reasons in the 2014 NPRM for selecting the Q3s for testing in the side impact test procedure, including the ATD's commercial availability, its enhanced biofidelity and instrumentation capabilities, and its durability. The injury criteria proposed for use with the Q3s dummy included a maximum HIC value of 570 measured in a 15 ms timeframe and a chest displacement IARV of 23 mm. NHTSA did not believe there was reason to propose a performance criterion for testing with the Q3s that would prohibit head contact with the intruding door, because testing in development of the NPRM demonstrated that peak HIC values occurred prior to the head contacting the intruding door. In other words, the risk of head injury from

---

[233] The anthropometry of the Q3 (and the side impact adaptation Q3s) is based on the Child Anthropometry Database (CANDAT) for a 3-year-old child compiled by the Netherlands Organization for Applied Scientific Research (TNO). CANDAT includes various characteristic dimensions and weights of children of different ages obtained from different regions in the world including United States, Europe, and Japan.

[234] NHTSA evaluated the Q3 dummy and found that the Q3 dummy did not have adequate biofidelity in lateral impact, in contrast to the Q3s dummy, which was designed for side impacts.

[235] The IR-TRACC is a deformation measurement tool that consists of an infrared LED emitter and an infrared phototransistor detector. The emitter and detector are enclosed at each end of a telescoping tube. The chest deformation is determined from the irradiance measured by the detector, which is inversely proportional to the distance of the detector from the emitter.

[236] Carlson, M., Burleigh, M., Barnes, A., Waagmeester, K., van Ratingen, M. "Q3s 3 Year Old Side Impact Dummy Development," 20th International Conference on the Enhanced Safety of Vehicles, Paper No. 07-0205, 2007. http://www-nrd.nhtsa.dot.gov/pdf/esv/esv20/07-0205-O.pdf... Last accessed on June 11, 2012.

[237] A few specifications were corrected in a response to a petition for reconsideration. 86 FR 66214, November 22, 2021. The document corrected a few drawings in the drawing package for the dummy and some provisions in the user's manual.

head-to-door contact was lower than the risk from peak acceleration, so measuring the peak HIC value from head-to-door contact would not further the assessment of compliance.

Comments on the proposed use of the Q3s were mixed, with some commenters expressing concerns about dummy sourcing and biofidelity, and other commenters supporting the use of the Q3s. NHTSA received some comments in support of the proposed performance requirements for the Q3s, but none on the specific HIC or chest deflection values proposed in the NPRM. Many commenters requested that the agency include a head containment requirement for the Q3s. As discussed below in this section, this final rule adopts the use of the Q3s dummy in the FMVSS No. 213a side impact test, along with the performance criteria proposed in the NPRM. The agency's November 3, 2020, final rule incorporating the Q3s test dummy into 49 CFR part 572, discusses technical details about the Q3s.

1. Q3s sourcing

As discussed in the November 3, 2020 final rule and further below, the sourcing and biofidelity issues associated with the Q3s have been addressed. Humanetics Innovative Solutions Inc. (HIS), the ATD supplier, only had minor drawing corrections to the November 3, 2020 final rule adopting the Q3s, and these corrections have been adopted in the November 22, 2021 final rule responding to the petition for reconsideration. With the final corrections adopted, NHTSA is confident that HIS will be able to deliver the Q3s within specification. When NHTSA published its 2013 NPRM proposing to incorporate the Q3s test dummy into 49 CFR part 572 (78 FR 69944; November 21, 2013), the Q3s was a proprietary product owned by HIS, and HIS was the only source from which to obtain the Q3s. By mid-2014, after the publication of the FMVSS No. 213a side impact NPRM, HIS began delivering Q3s dummies to end-users that included NHTSA, CRS manufacturers, and testing laboratories. NHTSA reopened the side impact protection NPRM comment period in mid-2014 to allow stakeholders to familiarize themselves with the Q3s, test CRSs with the ATD, and provide NHTSA with feedback in another round of comments.

In a comment, Dorel expressed concern with the dummy being available from only one source (HIS), and that the dummy could be subject to patents in whole or part, thus potentially subjecting Dorel and the CRS industry to unregulated and unbound prices. Dorel stated that one source and supply with no competition in an open market can lead to potential service, supply, and quality problems potentially interrupting timely certification and delivery of CRS products to customers. Dorel commented that allowing the continued use of the Hybrid III dummy as an option may temporarily alleviate this concern, but that in the long run, the lack of competition in dummy supply is a serious issue for the manufacturers and the entire CRS community.

In response, NHTSA makes clear that, while single source restrictions were in place during the NPRM stages (HIS retained rights to manufacture the dummy), the Q3s dummy drawings and designs are now free of any restrictions, including restrictions on their use in fabrication and in building computer simulation models of the dummy.[238]

2. Biofidelity

Dorel commented on the difficulties it had with the Q3s dummy in its final development phase in areas of construction, materials, manufacture, and qualification. Dorel believed that many aspects of the dummy were not yet finalized, such as the neck twist fixture design (Dorel said it was completed but still needs to be validated and is not ready for sale or purchase), and the Q3s calibration software. Dorel stated it was ready and willing to support the rulemaking process by providing data to help assess the repeatability and reproducibility of the dummy.

NHTSA has addressed these dummy design, qualification and biofidelity issues in the November 3, 2020 final rule incorporating the Q3s dummy into part 572. Since the final rule, HIS has been able to deliver Q3s dummies within specification and at the 49 CFR part 572 design level. That final rule also addresses the stiffness of the Q3s shoulder,[239] with NHTSA's

[238] Q3s final rule, 85 FR 69898, 69899 (November 3, 2020).
[239] 85 FR 69898.

test data demonstrating that the Q3s shoulder is biofidelic in the manner in which it will exert force on the CRS.

JPMA commented that HIC15 may not be the most appropriate measurement given the biofidelic limitations of the Q3s. JPMA explained that one member noted large variation in HIC measurements with the Q3s dummy in the proposed side impact test with relatively small changes in the test, which it believes is due in large part to the biofidelic limitations of the dummy. JPMA added that this member's previous comments on the NPRM for the Q3s dummy highlighted the impact the Q3s's shoulder stiffness could have on test results. JPMA stated that given the lack of biofidelity in this particular region of the Q3s dummy, HIC15 may not be the best or even most appropriate measure of side impact protection.

Agency Response

NHTSA's November 3, 2020 final rule addresses the stiffness of the Q3s shoulder,[240] with NHTSA's test data demonstrating that the Q3s shoulder is sufficiently biofidelic for the FMVSS No. 213a test. NHTSA explained in the final rule that, under conditions that correspond closest to the intended use of the Q3s in the proposed FMVSS No. 213 side impact test, the force response of the padded probe nearly matches the target. With magnitude of the force generated by the padded probe well within the envelope for a biofidelic response, these data show that the Q3s shoulder is biofidelic as to how it loads a CRS and how it responds to the external probe force. Thus, this loading of the child restraint, which would affect the overall motion of the dummy's upper torso and head (through which the FMVSS No. 213a injury criteria under consideration would be measured), is representative of an actual human. NHTSA concluded that the Q3s shoulder and how the ATD's shoulder, head and torso will interact when the dummy is restrained in a child restraint in the side impact test are sufficiently biofidelic.

---

[240] *Id.*

In response to JPMA's concerns about the biofidelity of the Q3s based on HIC15 fluctuations at different speeds, NHTSA's study of repeatability and reproducibility (discussed further below) shows that the HIC15 fluctuations are within acceptable limits.[241]

3. Aspects of testing with the Q3s

i. Reversibility

JPMA stated that the NPRM for the Q3s test dummy referred to the reversibility of the IR-TRACC and how it is to be configured, but the corresponding NPRM for the proposed side impact test did not provide for reversibility. JPMA added that some members reported testing of rear-facing CRSs at Calspan that was initially conducted with the IR-TRACC configured in the wrong direction because the NPRM for the test itself does not mention this feature. JPMA suggested that the final rule and test procedure specify the direction of the IR-TRACC consistent with the final rule on the Q3s to alleviate confusion and inconsistency.

In response, the configuration of the IR-TRACC has been incorporated in the regulatory text of this final rule for preparing the dummies in different CRS configurations. NHTSA's Office of Vehicle Safety Compliance test procedure will include details as well, as suggested by JPMA.

ii. HIII 3-year-old child test dummy as an alternative

NHTSA requested comment in the NPRM on the merits of using an alternative 3-year-old child ATD in FMVSS No. 213a. The alternative dummy was the Hybrid III 3-year-old dummy now used in the frontal crash test of FMVSS No. 213. Comparisons between the Q3s and Hybrid III 3-year-old ATD found that the two dummies' heads and necks provided nearly equivalent biofidelity. However, in all other biofidelity test conditions – shoulder, thorax and pelvis – the Q3s exhibited significant advantages relative to the alternative HIII 3-year-old design. In the NPRM, NHTSA stated its preference for the Q3s but sought comments on the alternative use of the Hybrid III 3-year-old ATD instead of the Q3s.

---

[241] See Wietholter & Louden (2021).

Comments Received

Dorel stated that it would support the temporary inclusion of the Hybrid III 3-year-old ATD as the introduction and availability of the Q3s was difficult from the dummy manufacturer. Dorel supported the approach of permitting optional use of the Hybrid III for some period of time in lieu of the Q3s dummy, adding that an option to use the Hybrid III 3-year-old ATD could serve to fill the lack of availability of the Q3s, as well as provide additional time to study the effects of the Q3s.

Dorel noted the comments filed by Humanetics in Docket NHTSA-2013-0118, which stated that NHTSA's proposal was not based on the latest Q3s dummy. Dorel added that when the dummy drawings and specifications change, it can affect the outcome of crash tests and cause manufacturers to consider different countermeasures. Dorel stated that at some point, the drawings and specifications need to be frozen so that NHTSA and manufacturers can be certain that they are using the same dummy in the research and, ultimately, compliance testing.

Britax and JPMA stated at that time that Britax and other CRS manufacturers had limited opportunity to test with the Q3s ATD and so had limited feedback to offer the agency on this topic. Britax also stated it would favor a phased-in requirement and use of the Q3s ATD so that, for a period of time, either ATD could be used to certify to the side impact test requirements. Britax noted this approach was similar to when the agency permitted use of the Hybrid II or Hybrid III ATDs following revisions to the frontal impact sled test requirements of FMVSS No. 213. Conversely, TRL argued that, if the Q3 has been ruled to not adequately meet lateral biofidelity requirements, then the Hybrid III 3-year-old should also not be used if it also does not meet side impact biofidelity requirements.

Agency Response

NHTSA has decided against using the HIII-3-year-old dummy in the side impact compliance test. NHTSA explained in the NPRM that biofidelity tests showed that, while the HIII and the Q3s dummies' heads and necks provided nearly equivalent biofidelity, the Q3s

exhibited significant advantages relative to the HIII-3-year-old in all other test conditions (shoulder, thorax and pelvis). NHTSA agrees with TRL that if the Hybrid III-3-year-old dummy does not adequately meet lateral biofidelity, then it should not be used to measure injury mechanisms on the child occupant in a side impact as envisioned in the dynamic test of FMVSS No. 213a. The agency has not found any advantage in using the HIII-3-year-old dummy in the side impact test, and so is not adopting use of the HIII dummy.

In their 2014 comments, Dorel and Britax supported the temporary use of the HIII-3-year-old dummy in the FMVSS No. 213a test based on their limited experience with the Q3s. Since 2014, manufacturers have had years to become familiar with the dummy, and, as discussed further in the lead time section below, manufacturers will be provided lead time to use the Q3s before certifying their CRSs to FMVSS No. 213a. Based on these considerations, NHTSA has decided not to use the Hybrid III-based 3-year-old ATD, and has instead decided to adopt a final test procedure that uses only the Q3s to evaluate injury criteria and compliance with FMVSS No. 213a. Use of the Q3s will ensure the fullest possible evaluation of the side protection of CRSs certified to the new standard.

The agency's rulemaking adopting the Q3s into 49 CFR part 572 "froze" the specifications of the test dummy in NHTSA's regulation, as sought by Dorel's comment. Thus, the test dummy is an established NHTSA test tool until amended through notice-and-comment rulemaking. We note that while there were different build levels of the Q3s dummy used throughout the development of the Q3s dummy, the January 2014 NPRM (79 FR 4570) proposing a side impact test for CRSs was based on tests using the proposed (and now adopted) Q3s dummy.

4. Q3s performance measures

To determine the injury criteria to use with the Q3s ATD, NHTSA analyzed NASS–CDS data average annual estimates (1995-2009) for AIS 2+ injuries to children 0- to 12-years-old in rear seats. Data showed that the most common AIS 2+ injuries among children restrained in side

impacts were to the head and face (55 percent), torso (chest and abdomen – 29 percent), and upper and lower extremities (13 percent). Given the high frequency of head and thoracic injuries to children involved in side crashes reported in these data and in multiple studies,[242] NHTSA proposed appropriate injury criteria that focused on the child occupant's head and thorax.

i. Head Injury Criterion (HIC)

NHTSA proposed to address the potential for head injuries by setting a maximum on the HIC value measured by the Q3s in the side impact test. HIC is used in FMVSS No. 213 and in all other crashworthiness FMVSSs that protect against adult and child head injury. However, while FMVSS No. 213's frontal impact requirement specifies an injury assessment reference value (IARV) of 1,000 measured in a 36 ms timeframe (36 ms for integrating head acceleration) (HIC36=1,000), NHTSA proposed a HIC limit of 570 measured in a 15 ms timeframe (15 ms duration for integrating head resultant acceleration) (HIC15=570) when using the Q3s dummy in the side impact sled test.

NHTSA explained differences between the FMVSS No. 213 frontal impact test and the proposed side impact test that made the HIC36 =1,000 and HIC15=570 performance values appropriate for each respective test. Specifically, FMVSS No. 213's frontal impact test evaluates the performance of CRSs on a frontal impact sled buck that does not have a structure (representing a front seat) forward of the tested CRS on the bench seat. In contrast, in the proposed side impact test, there is a simulated vehicle door and the test environment is set up so that ATD head contact with the CRS and the door is probable. Injurious contacts (such as head-to-door contacts) are of short duration (less than 15 ms) in the FMVSS No. 213a set-up and are more appropriately addressed by HIC15 (15 millisecond duration for integrating head resultant acceleration) than HIC36.

---

[242] Craig, M., "Q3s Injury Criteria," Human Injury Research Division, National Highway Traffic Safety Administration (Nov. 2013) [hereinafter Craig (2013)].

For head impact accelerations with duration less than 15 ms, the computed values of HIC15 and HIC36 are generally equivalent, meaning that the injury threshold level for HIC15=570 is more stringent than the threshold of HIC36=1,000. HIC15 is a more appropriate requirement than HIC36 for the short duration impact of FMVSS No. 213a, and is better able to discern injurious impact events.[243]

NHTSA also considered alternative HIC15 requirements of 400 and 800, and included an assessment of benefits and costs of those alternatives in the PRIA accompanying the NPRM. Ultimately, the agency declined either as the preferred proposed injury criterion.[244]

Comments Received

There were no comments on the proposed HIC15 thresholds to evaluate head injuries. NHTSA has adopted the HIC15=570 criterion for the reasons provided in the NPRM.

ii. Head contact (not assessed)

NHTSA tentatively concluded in the NPRM there was no safety need for a performance criterion that prohibited Q3s head contact with the intruding door.[245] NHTSA's video analysis showed that 13 out of 19 forward-facing CRS models had head-to-door contact during the test. However, further analysis of the head acceleration time histories showed that peak acceleration of the head occurred before the head contacted the door. Six of the 13 models that had head-to-door contact had HIC15 values exceeding 570; these peak HIC15 values occurred prior to head contact with the door. This suggested that the peak head acceleration was the result of a previous

---

[243] For long duration accelerations without a pronounced peak, such as those when the head does not contact any hard surfaces (as in the frontal FMVSS No. 213 test), the computed HIC15 value may be lower than the HIC36 value—so the HIC36 computation may be a better representation of the overall head acceleration.

[244] PRIA at pg. 65. NHTSA concluded that the 800 HIC limit resulted in many fewer equivalent lives saved than the proposed 570 HIC limit, higher cost per equivalent life saved, and lower net benefits. Although the 400 HIC alternative resulted in more equivalent lives saved and higher net benefits, NHTSA was concerned about the effect of the 400 HIC limit on child restraint design and use. Specifically, NHTSA was not able to demonstrate that theoretical structural improvements to CRSs could actually achieve the 400 HIC limit, and other means of meeting the limit would reduce the space provided for the child's head or make the CRS wider and heavier, which may impact overall use of the CRS.

[245] Such a performance criterion for CRSs is currently being used in the Australian standard AS/NZS 1754, and the Australian CREP consumer information program.

impact, most likely the head contacting the side of the CRS at the time the CRS contacted the intruding door.

Given that the head acceleration values computed during the time of head-to-door contact were lower than the peak head acceleration, NHTSA determined the risk of head injury from head-to-door contacts of the ATD in the 13 CRSs was not only much lower than the risk from the peak acceleration, but was also of a magnitude that would not result in serious injury. Accordingly, the agency tentatively decided not to use a performance criterion based specifically on head contact in tests with the Q3s dummy, as HIC15 appeared to sufficiently discern between non-injurious contacts and injurious contacts, and showed that head-to-door contact was not a relevant predictor of head injury in the side impact test.

Comments Received

There were a number of comments on this issue. UMTRI, ARCCA, NTSB, and the Transportation Research Laboratory (TRL) commented that a head containment criterion should be adopted in addition to HIC15. ARCCA commented that notwithstanding a low HIC15 score from the Q3s head impact with the door, there could be a risk of head injury for a child due to the differences between the Q3s dummy and a human child, and differences between the lab crash conditions of the FMVSS No. 213a test and the real world. Similarly, Mr. Hauschild stated that vehicle doors will have different designs that will include differing padding, shapes, and trim, so data from the test seat assembly might not be sufficient to show an absence of a safety need for a head containment requirement.

Some commenters (Mr. Hauschild, UMTRI, NTSB) believed it would be inconsistent to adopt a head containment performance criterion for the 12-month-old CRABI, and not for the Q3s. (NTSB raised a similar point regarding the inconsistence of measuring HIC with the Q3s but not with the 12-month-old CRABI. NTSB queried whether a head-to-CRS impact for the 12-month-old CRABI dummy may be injurious in some circumstances, implying that HIC should be a criterion in tests.)

Response

NHTSA is not adopting a head containment requirement in tests with the Q3s. NHTSA believes there is no safety need for a performance criterion prohibiting head contact of the Q3s because the HIC criterion discerns between contacts that are non-injurious (HIC15 less than 570) (soft contacts), and hard, injurious (HIC15 more than 570)) contacts. During the FMVSS No. 213a near-side impact test the intruding door first contacts the outer surface of the CRS, and then both the door and CRS side structure continue intruding into the dummy's seating area and impact the dummy. The first impact to the dummy's head happens when the CRS side countermeasure (side wing)[246] contacts the dummy. The HIC15 criterion evaluates whether this impact is injurious or not. Testing showed that this impact results in a high HIC, and that head-to-door contacts that occurred after the first impact of the head against the CRS side wing were soft contacts. That is, head-to-door impacts did not result in an acceleration response that would be injurious, as the HICs were consistently below the injury assessment reference value of 570. In light of this data, prohibiting head contact with the door as a criterion in the side impact test would not be meaningful, as such a prohibition would be commensurate with disallowing head contact with a non-injurious surface.

As explained above in this preamble, the stiffness of the simulated door in the SISA is representative of the stiffness found in vehicles, which NHTSA assessed using the free motion headform (FMH) testing described above. The stiffness of the 51 mm thick door padding includes the combined stiffness of the door assembly (inner and outer panel of the door) and the interior door padding. Details of the development of the door characteristics can be found in the "Child Restraint Side Impact Test Procedure Development" technical report.[247] Because the simulated door is a good representation of a vehicle door, NHTSA does not believe it is necessary to include a contact criterion when using the Q3s dummy. On the issue of the

[246] The first contact could be to the SISA door, if the child restraint has no side wing in the head area.
[247] Sullivan et al. (2013).

perceived inconsistencies in how the dummies are used in FMVSS No. 213a, as explained below, there is good reason not to adopt a restriction against head contact by the Q3s even though a restriction is adopted in tests with the 12-month-old CRABI. The Q3s and the CRABI dummies are fundamentally different. As the agency explained in the NPRM, the Q3s is a specially designed side impact dummy, while the 12-month-old CRABI dummy is designed for use in frontal impacts. The 12-month-old CRABI's injury-measuring instrumentation is not designed to measure HIC in a side crash, so its measurements of HIC to ascertain the potential for head injuries have not been shown valid in side crashes. (This is explained in more detail in the section below on the CRABI dummy.) If the CRABI were designed for use in side impacts, there would be more of a basis for harmonizing how the dummies are used in FMVSS No. 213a.

The agency is using the CRABI dummy in FMVSS No. 213a because there is no other suitable test dummy designed to test child restraints for children of sizes represented by the 12-month-old dummy. NHTSA is mandated by MAP-21 to issue a final rule to improve the protection of children under 18.1 kg (40 lb) seated in side impacts and is incorporating the 12-month-old CRABI in a manner that makes that possible. While the test dummy is a frontal test dummy, it is a valuable test tool in providing a worst-case assessment of injury risk in a side impact regarding head-to-door contact. A CRS that is unable to prevent the CRABI ATD's head from contacting the door in the side impact test is highly unlikely to prevent a real child's head from impacting the door. The head-to-door contact criterion will lead to improved side coverage of the infant's head and better means of preventing head-to-door contact.[248]

TRL commented that NHTSA test data from tests of the CRABI 12-month-old seem to contradict NHTSA's conclusion that the Q3s's peak head accelerations occur before contact with the door. The commenter states that, in tests where the CRABI head contacts the door, the

[248] Similarly, the child restraint must maintain structural integrity in the FMVSS No. 213a side crash when restraining the mass of the 12-month-old CRABI. Use of the CRABI will ensure a robust assessment of the structural integrity of the CRS in a dynamic side crash event.

HIC15 limit is exceeded, and that the one seat that failed on head-to-door contact recorded one of the lowest HIC values.

In response, the tests with the CRABI dummy presented in the NPRM had a high rate of HIC15 failures, yet field experience of rear facing seats indicates that the CRSs are very safe in side impacts (we discuss this issue further in a section below on head-to-door contact). The CRABI dummy's shoulder and neck are not designed for lateral loading and this may influence head kinematics prior to contact with the CRS/door. The CRABI head does not meet lateral biofidelity requirements. Therefore, NHTSA is unable to confirm that the dummy's HIC measurement provides a valid assessment of head injury risk in side impacts. Both the severity of the resulting head contacts and the response of the head to those contacts may not be representative of the real world.

TRL also believed that FMVSS No. 213a will encourage keeping the HIC15 low by allowing the Q3s head to roll out of the forward-facing CRS head pad, which increases the risk of contact between the head and the door. TRL was concerned that possible consequences of the standard's encouraging designs that roll out the head would be that the head may less protected in the event of a more oblique impact, and subject to risks of secondary impact or flying debris like broken glass. Consumers Union (CU) also observed that the forward component of the proposed side impact pulse caused the Q3s head to "roll out" of the child restraint shell in some instances. CU stated that, with taller forward-facing seats or booster seats, the Q3s's head position will be above the top edge (beltline) of the simulated door, so the rollout may result in a lower HIC as the ATD's head avoids contacting the door or inside surface of the CRS. CU argued that, although the rollout may predict real crash dynamics, "the lack of any interaction above the simulated door may not be realistic. In an actual side impact crash, window glass, pillars, or an intruding vehicle above the vehicle beltline will likely be a point of contact for a child's head."[249] CU suggested NHTSA consider a planar limit that would reduce the potential

[249] September 1, 2015 comment, p. 3.

for seats to be designed to take advantage of the rollout of the dummy's head to achieve low HIC values.

In response, NHTSA disagrees that in the absence of a Q3s head contact criterion, CRS manufacturers will design their seats in a manner that increases the likelihood of head-to-door contact. Managing the crash energy impacted to the dummy's head from an intruding door to meet the HIC15=570 criterion is an engineering challenge. It is highly unlikely that a CRS design would factor in head rollout, as managing the energy of the impact of the head when it eventually contacts the moving door will likely be unfeasible without managing the crash forces through countermeasures like foam and structures engineered into the side wings, and means to restricting the dummy's head within that protective area.

NHTSA's testing with the Q3s dummy in actual vehicles showed the CRS side head wing was in between the head of the dummy and the door, as the height of the Q3s dummy's head in a CRS was positioned at or was only partially above the windowsill. NHTSA modeled the FMVSS No. 213a side impact test to replicate the dynamics of FMVSS No. 214 MDB tests of actual vehicles. During the tests NHTSA conducted to model this protocol, we did not see any intruding vehicle or pillars interacting with the dummy. Some flexion of the CRS and dummy's head was present, but it was not enough to contact the glass, as the dummy is not tall enough to reach the glazing. Therefore, in response to CU, NHTSA does not believe a planar limit for this rulemaking is necessary. Although some rollout of the head of taller (older) occupants may occur above the window sill due to the higher sitting height of the child, use of a planar limit and the like addressing how CRSs should restrain the head of taller (older) occupants is beyond the scope of this rulemaking.

iii. Chest deflection

The agency proposed a chest displacement IARV for the Q3s of 23 mm. The proposed 23 mm chest displacement IARV was based on two separate studies that used length-based scaling from adult post-mortem human subject and dummy responses to generate an estimated

injury risk for a 3-year-old child.[250, 251] The studies both found, based on their independent data sets, that a displacement of 23 mm represented a 30 percent and 33 percent probability of AIS 3+ injury, respectively.

The agency did not receive any comments on the proposed chest deflection thresholds. NHTSA has adopted the proposed criterion for the reasons provided in the NPRM.

b. CRABI 12-month-old

The CRABI dummy is a frontal crash test dummy and is instrumented with head, neck, and chest accelerometers. NHTSA noted in the NPRM that, while there is no infant test dummy available that is specially designed for side impact testing, the agency believed that the CRABI 12-month-old could be a useful tool to evaluate critical aspects of CRS performance in side impacts. Because children under 1-year-old have the highest restraint use, NHTSA sought to find a way to evaluate the side impact performance of the CRSs they use, even if the evaluation is limited to containment, structural integrity, and other related matters.

1. Alternative ATDs

Several commenters suggested developing a new 12-month-old dummy to assess side impact performance. Graco suggested considering developing a Q1s (Q-series one-year-old), as did TRL, which argued that the Q1 is used for front and side impact testing in United Nations (U.N.) Regulations No. 44 (R.44) and No. 129 (R.129)[252] and would allow head accelerations to be assessed.

While NHTSA has not evaluated the Q1 dummy, NHTSA does not believe the Q1 dummy, which is a scaled version of the Q3 dummy, is biofidelic in side impact. NHTSA had evaluated the Q3 dummy and found it was not biofidelic in side impact. As a result, NHTSA conducted extensive research on modifications to the Q3 dummy design to improve its

---

[250] Mertz et al., "Biomechanical and Scaling Bases for Frontal and Side Impact Injury Assessment Reference Values," 47th Stapp Car Crash Conference, 2003-22-0009, October 2003.
[251] Craig (2013).
[252] United Nations Economic Commission for Europe (UNECE). Regulation 44, "Child Restraint Systems" and UNECE Regulation 129, "Enhanced Child Restraint Systems."

biofidelity in side impact. This multi-year agency effort led to the development of the Q3s dummy. NHTSA believes it is unnecessary to delay the final rule further to conduct multi-year research for developing a version of the Q1 dummy with appropriate biofidelity in side impact. The agency believes the use of the CRABI 12-month old dummy, along with the restriction protecting against head contact in the side test, will enhance the side crash protection of these CRSs.

2. Durability

JPMA raised concerns about the durability of the CRABI dummy, stating that in some tests the CRABI 12-month-old's arm broke at the elbow. The commenter stated that the attendant replacement costs of the dummy's upper arm was approximately $900, which JPMA said was a very significant expense if repeated during many test cycles. JPMA said its members reported that, during the side impact event, the test dummy's arm gets crushed between the side of the seat (which is impacted by the door panel feature) and the test dummy's torso, and that there is sufficient deflection at this point to break the elbow. Similarly, while Graco commented in support of the use of the 12-month-old CRABI dummy, it noted some concerns with long term maintenance of the dummy over time.

In response, during the development period of the side impact test protocol, and with over 50 tests with the 12-month-old CRABI dummy at VRTC, NHTSA did not observe arm breakage as described by JPMA.[253] Also, during testing at Kettering University (discussed in a section below), only one 12-month-old CRABI dummy test resulted in a fractured arm. NHTSA believes the problem with the arm breakage may have been due to an anomaly in the dummy set up in the JPMA tests. NHTSA is not aware of data demonstrating that the dummy's durability renders the dummy insufficient for use in the FMVSS No. 213a side impact test.

[253] In a test at VRTC an arm and leg were broken, but the breakage occurred to the arm and leg on the opposite side of impact (i.e. the impact was to the right side of the dummy but the breakage was to the left arm and leg). NHTSA believes the broken arm and leg on the opposite side of impact were a result of anomalous and undetermined factors and were not related to the durability of the dummy.

NHTSA also notes that, in the years since the 2014 NPRM preceding this final rule, and during the course of the testing of the Q3s in support of the rulemaking incorporating the dummy into 49 CFR part 572,[254] NHTSA has not learned of any dummy durability issues with the Q3s dummy as well.

3. Head-to-door contact

NHTSA proposed to use the CRABI 12-month-old ATD to measure head-to-door contact only, and not HIC15, noting concerns about the real-world relevance of the HIC values measured using the CRABI 12-month-old during developmental side impact testing. NHTSA presented results of 12 tests performed with rear-facing CRSs using the CRABI 12-month-old that showed nearly all of the CRSs exceeded the HIC15 injury threshold value of 390, which is the injury criteria used in FMVSS No. 208. NHTSA hypothesized that the CRABI 12-month-old dummy's shoulder and neck were not designed for lateral loading, which may influence head kinematics prior to contact with the CRS/door. Therefore, NHTSA concluded that both the severity of the resulting head contacts and the response of the head to those contacts may not be representative of the real world.

Although tests with the CRABI 12-month-old showed many of the CRSs did not meet a HIC15 criterion, field experience of rear-facing seats indicate that the CRSs are very safe in side impacts and provide five times more protection against serious injury than forward-facing seats in side impacts.[255] Accordingly, NHTSA has decided to use the CRABI 12-month-old to assess safety risks related to a CRS's ability to limit head-to-door contact in side crashes. The CRABI 12-month-old will provide a worst-case assessment of injury risk in a side impact in terms of head-to-door contact. That is, if the CRS were unable to prevent the ATD's head from contacting the door in the test, such an outcome is a reasonable indication of an unacceptable risk of head contact by the human child. NHTSA's study of 12 tests using the CRABI 12-month-old

[254] 85 FR 69898, *supra*.
[255] Sherwood et al. (2007).

in rear-facing CRSs showed that 1 (Combi Shuttle) out of 12 rear-facing CRS models tested had head-to-door contact during the test. A head-to-door criterion for assessing CRSs tested with the CRABI 12-month-old will ensure all rear-facing seats will have sufficient side coverage to protect in side impacts. Moreover, the CRABI dummy is a suitable test device to assess a CRS's ability to maintain its structural integrity in side crashes when restraining 1-year-old children (discussed further below).[256]

4. Component test

TRL expressed concern about the standard's not measuring loading on the 12-month-old CRABI dummy in rearward-facing seats, and stated that a possible unintended consequence could be that CRS side structures could be stiffened to prevent the head-door contact, which could increase loading to the child's head. TRL suggested that NHTSA could assess the energy absorption capabilities of the CRS in the form of a headform drop test measuring the ability of the side wings to manage impact energy. TRL explained that this type of component testing is currently conducted as part of the R.44/R.129 type-approval testing.

NHTSA considered this matter and collaborated with Transport Canada (TC) to evaluate new and existing component level tests that could evaluate the energy-absorption capability of the side structure of CRSs. Transport Canada evaluated energy absorption methodologies (including the ECE R.129 head drop test)[257] to potentially incorporate into FMVSS No. 213a and Canada Motor Vehicle Safety Standard (CMVSS) No. 213, but found that the procedure in the European standard does not adequately discriminate between materials that are and are not

[256] NHTSA did not propose a chest injury criterion for the CRABI. Biofidelic corridors for 12-month-old children are not available. Also, because the small size of a 12-month old dummy makes it difficult to fit instrumentation in such limited space, it may not be feasible to build and fully instrument a dummy this size for side impacts.
[257] Head drop tests specifying a 60 g head form threshold and a drop height of 100 mm.

energy absorbing.[258] NHTSA and TC were unable to find a suitable methodology that could be used to evaluate energy absorption capabilities of the side structure of CRSs.[259]

5. CRS system integrity and energy distribution

NHTSA proposed to require child restraints to maintain system integrity when dynamically tested with the Q3s and CRABI 12-month-old dummies. When a CRS is dynamically tested with the appropriate ATD, there could not be any complete separation of any load-bearing structural element of the CRS, or any partial separation exposing surfaces with sharp edges that may contact an occupant. These requirements would reduce the likelihood that a child using the CRS would be injured by the collapse or disintegration of the system in a side crash, or by contact with the interior of the passenger compartment or with components of the CRS.

Injury from contacting protrusions, such as the pointed ends of screws mounted in padding, would be prevented in a similar manner as that specified for the frontal crash test in FMVSS No. 213. The height of such protrusions would be limited to not more than 9.5 mm (0.375 inch) above any immediately adjacent surface. Also, contactable surfaces (surfaces contacted by the head or torso of the ATD) could not have an edge with a radius of less than 6.35 mm (0.25 inch), even under padding. Padding would compress in an impact and the load imposed on the child would be concentrated and potentially injurious.

Comments Received

CU suggested that NHTSA consider acceptance criteria that address the ability of the seat to maintain the connection between the carrier portion of seats and their corresponding bases. CU explained that, although separation of the carrier and base connection may be interpreted as a

---

[258] "Hallaoui, K.E., Cohen, M., Tylko, S. "Child Restraint Headrest Conformity Test Document." April 2017. To be docketed along with this final rule.

[259] FMVSS No. 213 had a head impact protection requirement for rear-facing CRSs that required areas contactable by the dummy's head to be covered with slow recovery, energy absorbing material. That requirement was removed when the 12-month-old CRABI dummy was adopted into FMVSS No. 213 and HIC was introduced as a performance measure. The agency decided against this approach for FMVSS No. 213a because not enough is known about a foam specification to distinguish between effective and ineffective foams.

separated load-bearing structural element per currently proposed acceptance criteria, it may warrant its own performance requirement. CU added that NHTSA should consider partial separations in load-bearing areas that may significantly reduce a seat's ability to contain its occupant or to remain attached to the vehicle seat as potential non-compliances with the standard. CU explained that rear-facing bases, for example, could exhibit significant levels of cracking that will never be considered contactable, but which could potentially significantly degrade a seat's ability to remain attached to a vehicle.

Agency Response

Structural integrity will be evaluated with the same criteria in the current FMVSS No. 213 S5.1.1. The objectives of the system integrity requirements are to prevent ejection from the restraint system and to ensure that the system does not fracture or separate in such a way as to harm the child. Structural integrity requirements require CRSs dynamically tested with the appropriate dummy have no complete separation of any load bearing structural element of the system or any partial separation exposing surfaces with sharp edges that may contact an occupant. The agency amended FMVSS No. 213 to allow some partial separations in response to comments from CRS manufacturers that stated that some CRS separations (e.g., hairline fracturing) could be purposely designed into the CRS to improve its energy absorption performance.[260] NHTSA did not see any cracking or evidence of poor infant carrier retention during side impact testing. These requirements have ensured the structural integrity of child restraints in frontal impacts for years. The commenter did not provide sufficient reasons for concluding additional requirements for evaluating structural integrity are necessary in side impacts.

IX. Repeatability and Reproducibility

[260] 43 FR 21470 (May 18, 1978).

The Vehicle Safety Act requires FMVSS that are practicable, meet the need for motor vehicle safety, and stated in objective terms.[261] In proposing FMVSS No. 213a, NHTSA determined that the Takata-based test procedure produced repeatable results and was able to provide results that distinguished between the performance of various CRS models based on the design of the side wings and stiffness of the CRS padding.[262] Similarly, based on evaluations of the Q3s going back to 2002, the agency determined that the Q3s demonstrated good biofidelity, repeatability, reproducibility, and durability.[263] In the NPRM, NHTSA outlined its plans to evaluate the repeatability and reproducibility of the proposed sled test procedure in different laboratories, and sought comments on what parameters, additional to the proposed specifications, should be specified to reproduce the test procedure on a deceleration sled.[264]

Several commenters discussed the importance of the repeatability and reproducibility of the procedure and provided suggestions to improve repeatability. Dorel emphasized that reproducibility between test facilities is an essential requirement of an objective safety standard and that NHTSA must specify the test procedures for its FMVSS in sufficient detail to ensure that the tests conducted at one test facility will yield results that are essentially identical to the results at a different test facility when the same product is tested. Dorel stated that reproducibility is critical to the CRS industry, and opined that reproducibility is a significant challenge with current FMVSS No. 213.

Dorel stated it conducted a series of side impact tests of the Safety First Air Protect CRS Model at Calspan (a commercial testing facility) on a Hyge[265] sled utilizing a test fixture constructed from the NPRM drawings. Dorel said the tests showed HIC15 values of 313 and 354, while NHTSA's NPRM test data on the same CRS Model provided showed HIC15 values

---

[261] 49 U.S.C. 30111(a).
[262] 79 FR at 4582 (Jan. 28, 2014) (citing Sullivan et al. (2009), Sullivan et al. (2011)).
[263] NPRM, 79 FR at 4590 (Jan. 28, 2014); final rule, 85 FR 69898 (Nov. 3, 2020).
[264] "Repeatability" is defined here as the similarity of test responses (dummy injury measures) when subjected to multiple repeats of a given test condition. "Reproducibility" is defined as the similarity of test responses subjected to repeats of a given test condition in different test laboratories.
[265] Hyge is a type of acceleration sled.

of 424, 566, and 625. Dorel calculated the coefficient of variation (CV) of the HIC15 values as 8.7 for the Calspan tests, while the CV for NHTSA's tests was 19.2 for HIC values. Dorel believed that these results indicate a significant problem in the repeatability and reproducibility of the proposed test method.

Graco stated it conducted more than 110 side impact crash test trials in response to the 2014 proposal and studied repeatability and reproducibility of 5 types of CRSs (rear-facing infant carrier, rear-facing convertible CRS, forward-facing convertible CRS, 3-in-1 forward-facing CRS, and high-back booster seat). Graco stated it tested 8 different CRS models multiple times at three crash test facilities, using different sized dummies, to determine if results are repeatable within the same test facility and reproducible at different test facilities with acceleration-type sleds. The commenter stated there was significant variation across the test facilities and provided HIC15 data of a Q3s dummy from the three test facilities to illustrate differences in test results from different test facilities for a specific CRS.[266] Graco said there were cases where a seat with passing results at a specific test facility produced failing results at another test facility. Graco surmised that the different HIC15 values were most likely due to the differences in the sliding seat acceleration and in head acceleration when the CRS impacts the door. Graco explained that the test facility that produced the failing result at the time the head impacted the door, had a greater sliding seat acceleration than the other two facilities.

Graco also provided data of chest deflection of the Q3s dummy from tests conducted at the three test facilities, to illustrate differences in the chest deflection results at different test facilities.[267] Graco reiterated that there were cases where a CRS with passing chest deflection results at one test facility produced failing results at other test facilities. Graco believed that since the timing of these high chest deflection measurements occur at the same time as the HIC15 measurements, the same factors contributed to the variation in measurements of chest

[266] NHTSA-2014-0012-0042, at pg. 2.
[267] *Id*., at pg. 3.

deflection and HIC15 values across the different test facilities (i.e., differences in sliding seat acceleration and acceleration of the thorax at the time of contact with the door foam). Graco provided initial test data on the potential cause of variation and provided its recommendations on sled design and other factors to reduce the variation in results between test facilities.

Britax stated that it is essential that the test procedure's provisions for seat and ATD installation are described in sufficient detail to ensure consistency in test results and ATD measurements. Britax also stated that defining specifications for variables such as the test rig foam and set up are critical to achieving repeatable and consistent results.

Agency Response

NHTSA has modified the SISA to minimize sources of variability in the test and to make the test setup more durable. The modifications reduced vibrations that affect accelerometer readings, defined accelerometer processing and the type and location of the accelerometers, and defined a different honeycomb with a reduced tolerance to minimize variation. NHTSA's modifications also enable the SISA to better match the changes to the FMVSS No. 213 frontal impact sled test seat assembly proposed in the November 2, 2020 MAP-21 NPRM, *supra*. These modifications included additional stiffening of the seat's framework, an updated D-ring location, increased seat back height, simplified door and armrest shapes, modified lower anchor bracket and tether anchor location, defined seating foam, and incorporation of a seat cushion assembly representative of current vehicles. NHTSA also defined in more detail the procedure for setting up the CRS and ATD prior to testing (including arm placement, discussed further in a section below), modified SISA drawing specifications to eliminate any ambiguities, and specified the weight of the sliding seat at test facilities, as the weight affects the pulse generated by the sliding seat/honeycomb impact.

These modifications improved the R&R of the FMVSS No. 213a test. The modifications to the SISA reduced the variability of test results. Some improvements to R&R also resulted

from further developing the level of detail in the test procedure, as suggested by some commenters. NHTSA believes that the variability in tests manufacturers performed at different laboratories was partly because there was no detailed test procedure during the NPRM phase specifying how the FMVSS No. 213a test should be conducted.

With a detailed test procedure, NHTSA tests at two different test facilities with different sled systems (acceleration and deceleration types) were able to produce repeatable and reproducible results.[268] The details of the improvements are described at length in the technical reports by VRTC[269] and NHTSA/Kettering.[270] The updated technical drawings of the SISA are available in the docket of this final rule.

After improving the test procedure and SISA, the agency conducted tests on six CRS models to evaluate repeatability at VRTC with the acceleration sled, and on five of the same six CRS models to evaluate repeatability at Kettering University with the deceleration sled. NHTSA sought to evaluate the reproducibility of the test results from the two test facilities.[271] The coefficient of variation (CV)[272] was used to objectively evaluate the repeatability and reproducibility of the FMVSS No. 213a side test fixtures and procedures. The CV is calculated by dividing the standard deviation by the average; multiplying the CV by 100 computes the percent CV. For assessing repeatability and reproducibility, a CV value less than or equal to 5 percent was considered as excellent, a CV value between 5 and 10 percent was considered as good, a CV value between 10 and 15 as marginal, and CV values above 15 were considered poor. Since variation in test results is likely contributable to more than just the test fixtures, dummies and procedure, a percent CV at or below 10 percent indicates results are similar. Other

---

[268] The test procedure followed during NHTSA's testing can be found in the technical report, "FMVSS No. 213 Side Impact Test Evaluation and Revision," available in the docket of this final rule.
[269] Louden & Wietholter (2022).
[270] Brelin-Fornari, J., "Final Report on CRS Side Impact Study of Repeatability and Reproducibility using a Deceleration Sled," July 2017. Available in the docket for this final rule.
[271] Wietholter, K. & Louden, A. (2021, November). *Repeatability and Reproducibility of the FMVSS No. 213 Side Impact Test.* Washington, DC: National Highway Traffic Safety Administration.
[272] NHTSA has used CVs to assess the repeatability and reproducibility of ATDs throughout the history of Part 572, starting in 1975. See NPRM for the original subpart B Hybrid II 50th percentile male ATD (40 FR 33466; August 8, 1975).

sources of variability include, but are not limited to, pulse variation, and variability related to differences in the CRS test specimens as produced.

The test program showed good to excellent repeatability and reproducibility in the test results. Table 24 shows the CRS models, orientation and CV values at each of the two test facilities to evaluate repeatability. The CV values for HIC and chest deflection in tests conducted at VRTC with the Q3s dummy were less than 5 percent and are considered excellent for repeatability.[273] The CV values for HIC and chest deflection in tests conducted at Kettering with the Q3s dummy were less than 5 percent (except for chest deflection measured in the rear-facing convertible (Graco Comfort Sport) which had a CV value of 16.1 percent).

Table 24. Coefficient of Variation (CV) for Assessing Repeatability and Reproducibility.

ATD	CRS	Orientation	VRTC CV%		Kettering CV %		VRTC and Kettering CV%	
			HIC15	Chest Deflection	HIC15	Chest Deflection	HIC15	Chest Deflection
Q3s	Evenflo Maestro	FF Combination **	4.3	1.3	4.4	1.4	4.2	1.2
Q3s	Graco Comfort Sport	FF Convertible **	4	3.1	2.1	1.9	3.4	3.6
Q3s	Graco Comfort Sport	RF Convertible	3.6	2.5	3	**16.1**	**16**	**-10.5**
Q3s	Diono Olympia*	RF Convertible					2.3	

*The Diono Olympia had fewer tests per test facility compared to the rest in this analysis. The Diono Olympia was tested once at VRTC and twice at Kettering. The CV for Chest Deflection was not calculated as an instrumentation problem caused an erroneous reading in the test at VRTC.
** All forward-facing CRSs were installed using the lower anchors and tether anchor of CRAS and all rear-facing CRSs were installed using lower anchors only.

It is unknown why the results for the Graco rear-facing convertible were elevated; NHTSA could not perform additional testing under the contract. Possibilities include limited testing, variation in test set-up, variation in the overall relative velocity at impact time (while within the tolerance it was higher than other repeat tests) and/or other factors (i.e. CRS

[273] The CV values for HIC results in tests conducted at VRTC with the CRABI 12-month-old dummy were less than 8 percent showing good repeatability as well; however, this was analyzed for comparison purposes only, as the final FMVSS No. 213a test procedure only evaluates CRABI 12-month-old head containment on a pass/fail basis.

sensitivity). CVs obtained elsewhere were not as high and were in the acceptable range. While not part of this test series, during the development of the NPRM, NHTSA/Kettering performed side impact tests with a deceleration-type sled. Tests with the Combi Zeus and Britax Advocate in rear-facing configuration with the Q3s dummy[274] showed CV values of only 4.9 percent and 4.2 percent respectively for chest displacement. These results show an excellent CV for chest displacement in testing with a deceleration-type sled test.[275] NHTSA believes that more tests at Kettering troubleshooting the increased CV value of 16.1 percent would have resulted in a reduced CV.

The tests performed with the CRABI 12-month-old dummy (see Table 25 below) provided consistent head contact results at each test facility (that is, the result of whether there was contact of the head with the door was the same for all the repeat tests with the same CRS in both test facilities).

Table 25. Side Impact Tests using the CRABI 12-month-old dummy

CRS	Orientation	VRTC	Kettering	Door Contact
Chicco KeyFit 30	Rear Facing	3	3	No
Britax Boulevard	Rear Facing	3	3	No
Cosco Apt 40	Forward Facing	3	1	No

The CV values for HIC and chest deflection measures for each CRS model from tests conducted in both test facilities with the Q3s dummy considered together were generally lower than 5 percent. Only one CRS model in rear-facing configuration using the Q3s dummy at both test facilities had a CV value of 10.5 percent for chest deflection and a 16 percent CV for HIC15

[274] Three repeat tests were performed for each model. Test results are documented in the technical report DOT HS 811 994 and 995. Brelin-Fornarni, J., "Development of NHTSA's Side Impact Test Procedure for Child Restraint Systems Using a Deceleration Sled: Final Report, Part 1. April 2014. Link: https://www.nhtsa.gov/sites/nhtsa.dot.gov/files/811994-sideimpcttest-chrestraintdecelsled_pt1.pdfAnd Brelin-Fornarni, J., "Development of NHTSA's Side Impact Test Procedure for Child Restraint Systems Using a Deceleration Sled: Final Report, Part 2. May 2014. Links: https://www.nhtsa.gov/sites/nhtsa.dot.gov/files/811994-sideimpcttest-chrestraintdecelsled_pt1.pdf andhttps://www.nhtsa.gov/sites/nhtsa.gov/files/documents/811995-sideimpcttest-chrestraintdecelsled_pt2.pdf

[275] These tests were performed with the NPRM proposed SISA and honeycomb; however, as discussed above, updates to the SISA since the NPRM did not affect results. Therefore, we consider the repeatability results of the NPRM tests with the deceleration type sled valid.

when the data from the two test facilities for this CRS were combined. While these results suggest that HIC measures of the Q3s dummy in rear-facing CRSs have poor reproducibility (high CV values), this result is based on test data of one CRS model (Graco Comfort Sport), which also had poor repeatability measures in one of the test facilities. As discussed above, it is unknown why this CRS had poor repeatability. The CV of HIC15 measures from a more limited set of tests with the Diono Olympia CRS in the rear-facing configuration using the Q3s dummy (one test at VRTC and two tests at Kettering) was 2.3 percent, showing excellent repeatability in a rear-facing CRS with the Q3s dummy. Details on the repeatability and reproducibility analysis can be found in the docket for this final rule.[276]

The CV analysis confirms good repeatability and reproducibility of HIC and chest deflection measures in forward-facing CRSs tested with the Q3s dummy. Rear-facing infant tests with the CRABI 12-month old showed good repeatability and reproducibility for assessing head-to-door contact. CV analysis of rear-facing convertible CRSs with the Q3s had inconclusive results, possibly due to the limited number of data points. The limited test series between the two test facilities with a rear-facing convertible (Diono Olympia) showed HIC15 had a 2.5 percent CV, showing good repeatability and reproducibility with a rear-facing CRSs tested with the Q3s dummy. Chest deflection could not be computed as the test at VRTC had an erroneous chest deflection reading.

NHTSA's CV analysis of the side impact tests with the final configuration of the SISA demonstrates that the changes to the configuration of the SISA and adoption of some of the modifications suggested by commenters (see next section), have addressed the repeatability and reproducibility concerns raised by the commenters. NHTSA has found the variability in the performance measures is within acceptable levels; the repeatability and reproducibility of the side impact test is considered good to excellent. Accordingly, NHTSA has determined that the

[276] Wietholter, K. & Louden, A. (November 2021). *Repeatability and Reproducibility of the FMVSS No. 213 Side Impact Test.* Washington, DC: National Highway Traffic Safety Administration.

side impact test, using the dummies specified in the standard to determine compliance with the standard, produces repeatable and reproducible results in repeat tests in the same facility and in multiple tests across different test facilities.

Commenters' other suggestions

Accelerometer placement

Graco recommended that NHTSA provide specifications for accelerometer placement and accepted types, so that data acquisition for velocity and acceleration could be more consistent between test facilities. Graco noted it saw differences in test labs' interpretations of the proposed side impact testing specifications for using the accelerometers, and provided a diagram of differing accelerometer placement locations between facilities. The commenter also provided an acceleration plot demonstrating how different accelerometer types represent the acceleration pulse differently. Graco stated that by defining the location and accepted options for dampened accelerometers, acceleration and velocity measurements can be more standardized to prevent inconsistent calculations of raw data.

Agency Response

NHTSA tested many accelerometer locations[277] on the sliding seat and determined that the final placement of the accelerometers will be on the right rear seat assembly leg at predetermined locations; with the primary accelerometer to be mounted on top and the redundant to be mounted 31 millimeters below.[278] The selected locations produced the more consistent and less noisy measurements during testing. The final locations of the accelerometers are specified in the final drawing package. The final drawings have also been modified so that the accelerometer

[277] See the following report for documented accelerometer placement trials. Louden, A., & Wietholter, K. (September 2022). *FMVSS No. 213 side impact test evaluation and revision* (Report No. DOT HS 812 791). Washington, DC: National Highway Traffic Safety Administration (hereinafter Louden & Wietholter (2022)). Available in the docket of this final rule.

[278] This information is discussed in detail in NHTSA's "FMVSS No. 213 Side Impact Test Evaluation and Revision" report.

specifications allow compliance test facilities to use different brands of accelerometers and prevent sourcing issues in the future.[279]

Belt engagement

Graco stated it found that, during the time of engagement between the aluminum honeycomb and the impact surface of the sliding seat, the Type 2 shoulder belt is engaged with the door structure, which can affect the sliding seat acceleration pulse. Graco provided images that it believed demonstrates the interference of the shoulder belt webbing, and a graph that displays a modified acceleration pulse profile caused by this interference, compared to an acceleration profile without this interference. Graco recommended NHTSA consider removing this interference of the Type 2 shoulder belt as a control for repeatability of the acceleration pulse.

Agency Response

NHTSA's testing with the CRS installed using the Type 2 (lap/shoulder belt) showed no interference of the shoulder portion of the Type 2 belt with the door.[280] The agency found that in testing, the shoulder portion of the Type 2 belt slides behind the door during contact of the sliding seat with the door. This interaction did not affect the sliding seat acceleration pulse or any of the performance measures.

NHTSA also performed a static trial with the Graco Nautilus, which is the model Graco showed had seatbelt-door interaction. In that trial, the seat belt webbing lay flat against the top of the seat back, which would allow the seat back to go through the door and seat back gap.[281] NHTSA was not able to reproduce Graco's seat belt interaction with the door. The agency believes that any possible seatbelt-door interaction is avoided by ensuring the seat belt lies flat

[279] During the agency's testing, we found that the type of accelerometer (damped, undamped, ruggedized, etc.) has an effect on the results as different accelerometers may pick up different vibration levels.
[280] Additional pictures to illustrate the seat belt sliding behind the seat back are available in the docket for this final rule.
[281] Additional pictures to illustrate the seat belt sliding behind the seat back are available in the docket for this final rule.

against the seat back. The test procedure will incorporate a step to ensure the seat belt lies flat before testing.

Test facilities

Dorel expressed concerns about test facilities conducting compliance tests for NHTSA not following the agency's Office of Vehicle Safety Compliance's (OVSC's) published test procedures and not obtaining OVSC's express permission to deviate. The commenter urged NHTSA to increase oversight of the test labs to enhance repeatability and reproducibility of the compliance test results. In response, NHTSA has reviewed its compliance program and has not found evidence of the problem the commenter describes. NHTSA is nonetheless concerned about assertions that deviations from protocols have reduced the integrity of the FMVSS No. 213 tests, so it is emphasizing again to its test lab to use the open and strong channels of communication set up by OVSC for any questions about test procedures or practices. Further, the agency will unreservedly consider ways to improve any issue arising in the course of OVSC testing that impact the quality of the compliance test program.

Dorel stated that it has had concerns about the repeatability and reproducibility of the current frontal impact sled test in FMVSS No. 213. In response, the frontal impact sled test has been effectively used in FMVSS No. 213 compliance tests for over forty years and is instrumental in the assessment of a child restraint's real-world performance in a crash.[282] In 2020, NHTSA took steps to update the sled assembly and strengthen its technical underpinnings by way of the November 2, 2020 NPRM responding to MAP-21.[283] The agency is analyzing comments received on that NPRM and will address all relevant comments relating to the R&R of the frontal sled assembly in the final rule.

X. Lead Time and Effective Date

[282] 44 FR 72131 (December 13, 1979), 45 FR 27045, *seat assembly updated*, 68 FR 37620 (June 24, 2003).
[283] MAP-21 (§ 31501(b)(2)) requires NHTSA to issue a final rule to amend Standard No. 213 to better simulate a single representative motor vehicle rear seat. The regulation information number (RIN) for the rulemaking is RIN 2127-AL34. It may be tracked in the U.S. government's Unified Agenda of Regulatory and Deregulatory Actions.

NHTSA proposed a compliance date of three years from the date of publication of the final rule, meaning that CRSs manufactured on or after that date must meet FMVSS No. 213a. NHTSA proposed to permit optional early compliance with the requirements, to permit manufacturers the option of meeting FMVSS No. 213a sooner than the 3-year compliance date and certifying the compliance of their products to the standard.

NHTSA discussed in the NPRM its tentative determination that there was good cause to provide three years of lead time. The agency believed three years was a reasonable time for CRS manufacturers to gain familiarity with the new side impact standard, the test using the SISA, and the Q3s dummy adopted by the standard. Manufacturers would have to assess the entirety of their product line for conformance to the new standard, devise and incorporate any needed design changes to meet the standard, implement the changes in manufacturing processes for the seats, and certify the compliance of the child restraints. NHTSA believed that three years of lead time provides a timeframe that allows manufacturers to achieve these actions while ensuring the enhanced side impact protection adopted by FMVSS No. 213a is attained as quickly as possible.

Comments Received

Commenters diverged as to the need for a three-year lead time. Child restraint manufacturers commenting on this issue agreed with the proposed lead time. Dorel concurred that a three-year lead time was sufficient, but conditioned its support for this lead time on NHTSA's findings that the test procedure was sufficiently objective to eliminate test-to-test repeatability problems and test facility-to-facility reproducibility problems. In contrast, Safe Ride News (SRN), Safe Kids Worldwide, Mr. Hauschild, Consumers Union (CU), and ARRCA suggested a reduced lead time, from 18 months to two years at the most (SRN and Safe Kids).

Some of the latter commenters argued that manufacturers have already incorporated side impact protection into many of their products, and that the number of children who could be protected by a side impact standard is significant enough to shorten the lead time. Mr. Hauschild stated that, since many of the CRS manufacturers are advertising that their CRSs have side

impact protection or that their seats have been side impact tested, they should have no problem meeting the lead time requirements, and may be able to meet the requirement sooner. CU urged NHTSA to shorten the three-year compliance deadline, arguing that MAP-21 was issued in 2012, and that, even then, NHTSA had been working on a side protection standard for years, which should have provided notice to manufacturers that such new side impact requirements were coming. ARRCA believed the FMVSS No. 213a test procedure is not complex and that test facilities should be able to configure their sleds with the required hardware within a month of the final rule being published. ARRCA believed that upgrading the CRSs that do not comply or removing them from the market should be capable of being accomplished within a year of the final rule. ARRCA argued that, under NHTSA's preliminary cost-benefit analysis for the NPRM, a one-year effective date would save the lives of approximately 36 children.

Agency Response

NHTSA is adopting the proposed lead time of three years from the publication date of this final rule. In response to Dorel, the test procedure has been demonstrated to be both repeatable and reproducible, as discussed above and in detail in the report, "Repeatability and Reproducibility of the FMVSS No. 213 Side Impact Test,"[284] so the provided lead time will be sufficient.

In response to commenters seeking a shorter lead time, NHTSA has decided against a compliance date less than three years from the date of publication of this final rule for several reasons. This final rule makes modifications to the SISA to minimize sources of variability in the test, make the test setup more durable and increase the representativeness of the SISA to today's vehicles. The rule matches the SISA to the FMVSS No. 213 frontal impact sled test seat assembly proposed in the November 2, 2020 NPRM, *supra*. This final rule also defines in more detail the procedure for setting up the CRS and ATD prior to testing (including arm placement, which can affect test results), specifies the weight of the sliding seat at test facilities, and makes

[284] Wietholter & Louden (2021).

other changes to improve the R&R of the test. Manufacturers will need time to become familiar with the SISA as set forth in this final rule and will need time to test their child restraints on the SISA adopted by this final rule. The agency believes manufacturers will seek to test their products on the SISA, and with the Q3s dummy, to maximize the possibility that the test they use for certifying their products aligns with the test NHTSA uses in the FMVSS No. 213a compliance test. The agency adopted the Q3s into regulation by a final rule only in 2020, so manufacturers will need time to acquire and test with the dummy.[285]

In addition, as shown in NHTSA's 2017 testing of CRSs on the SISA adopted by this final rule, most of the child restraints tested then did *not* meet the FMVSS No. 213a performance criteria. These data indicate a need for CRSs to be re-engineered and reassessed in their use of side wings, padding and other countermeasures in providing side impact protection. Further, this final rule specifies that CRSs will also have to be certified as meeting FMVSS No. 213a when attached by a Type 2 (lap/shoulder seat belt) in addition to the CRAS. Manufacturers will need time to assess the performance of their CRSs when attached to the SISA by way of the belt system, and redesign their restraints with compliant countermeasures as appropriate.

Lastly, NHTSA has a number of ongoing rulemakings mandated by MAP-21 for child restraints. In addition to this final rule, as noted throughout this document MAP-21 directed NHTSA to update the seat assembly used in the frontal crash test of FMVSS No. 213. MAP-21 also directed NHTSA to undertake rulemaking to improve the ease of use of CRAS.[286] A three-year lead time provides time to manufacturers to adjust their manufacturing processes to respond to regulatory changes made by these actions and redesign CRS models, to the extent possible, within their design cycle to minimize the cost impacts on consumers. For the reasons explained

---

[285] The Q3s dummy was adopted in a final rule published on November 3, 2020 (85 FR 69898). While the agency was developing the final rule, the agency realized that some of the Q3s dummies that had been delivered to CRS manufacturers and test facilities following the publication of the 2014 NPRM did not meet the specifications NHTSA had proposed for the dummy. The three-year lead time provides time to CRS manufacturers that had tested with those out-of-spec dummies to acquire dummies that meet the necessary qualifications, and reassess their CRSs as appropriate.

[286] MAP-21, Section 31502. NHTSA published an NPRM on January 23, 2015 (80 FR 3744). The RIN for the rulemaking is 2127-AL20. It may be tracked in the Unified Agenda of Regulatory and Deregulatory Actions.

above, NHTSA finds good cause to have an effective date of three years following the date of publication in the Federal Register.[287]

XI. REGULATORY NOTICES AND ANALYSES

Executive Order (E.O.) 12866 (Regulatory Planning and Review), E.O. 13563, and DOT Regulatory Policies and Procedures

The agency has considered the impact of this rulemaking action under E.O. 12866, E.O. 13563, and the Department of Transportation's regulatory procedures. This rulemaking is considered "significant" and was reviewed by the Office of Management and Budget under E.O. 12866, "Regulatory Planning and Review." This final rule amends FMVSS No. 213 to adopt side impact performance requirements for child restraint systems designed to seat children in a weight range that includes weights up to 18.1 kg (40 lb). The requirements are set forth in FMVSS No. 213a, which specifies that the child restraints meet the requirements in a dynamic test simulating a vehicle-to-vehicle side impact. The side impact test of FMVSS No. 213a is additional to the current frontal impact tests of FMVSS No. 213.

NHTSA has prepared a final regulatory impact analysis (FRIA) that assesses the cost and benefits of this final rule.[288] The FRIA follows a preliminary RIA (PRIA) that was issued in support of the NPRM. The PRIA evaluated the countermeasures the agency tentatively determined may be needed for CRSs to meet the proposed performance requirements, and the benefits of those changes to the target population (children restrained in a CRS in a side impact). At the time of the PRIA, NHTSA believed that CRS manufacturers were already designing CRSs to address side impacts, and that generally only minor changes in design for forward- and rear-facing child restraints would be needed to enable child restraints to pass the test proposed in the NPRM. NHTSA tentatively determined that adding energy-absorbing padding to the CRS

---

[287] 49 U.S.C. 30113(d).

[288] The FRIA discusses issues relating to the estimated cost, benefits, and other impacts of this regulatory action. The FRIA is available in the docket for this final rule and may be obtained by downloading it or by contacting Docket Management at the address or telephone number provided at the beginning of this document.

around the head area of the child and to the side structures (CRS side "wings") would likely be sufficient for CRSs to meet the proposed requirements. Accordingly, NHTSA estimated the costs and benefits of adding such padding to CRSs and requested comment on the issue.

The PRIA determined that the rule would be cost beneficial. NHTSA estimated that adding padding to the head area and wings of the CRS would reduce the likelihood of injuries by 3.7 fatalities and 41 injuries when all child restraints sold on the market met the proposed test criteria limits. These impacts would accrue to an economic benefit of $168.97 million at a 3 percent discount rate and $152.16 million at a 7 percent discount rate. NHTSA estimated the cost of the proposed rule at about $7.37 million, with $830,123 of that attributed to the cost of testing all child restraint models. The countermeasures were estimated to be larger wings (side structure) and padding with energy-absorption characteristics that would have a retail cost of approximately $0.58 per CRS.[289]

Discussion

As discussed at the beginning of this document, most of the comments supported the rulemaking proposal but a few did not. Comments in opposition or expressing concerns (from Dr. Baer, UMTRI and IIHS), were discussed at length in Section V of this preamble, as was NHTSA's response to those comments, and will not be repeated here. Several other individuals did not favor the proposal. Mr. Michael Montalbano expressed concern about the assumptions NHTSA used for the cost benefit analysis, stating that the NPRM indicated that 45 percent of child fatalities "occurred where the child was not wearing [sic] a CRS" and that side crashes resulting in fatalities to children in CRSs mainly occur in very severe, un-survivable side impact conditions. Mr. Montalbano asked: "Will these side impact requirements be effective given that nearly half of child fatalities occur when CRSs are not used, and when CRSs are used, most

[289] The agency believed that the cost of a compliance test (estimated at $1,300) spread over the number of units sold of that child restraint model was very small, especially when compared to the price of a child restraint. We estimated that 127 CRS models comprised the 11.3 million CRSs sold annually for children weighing up to 40 lb, which have an average model life of 5 years. Therefore, the annual cost of testing new CRS models was estimated to be $830,123. This testing cost, distributed among the 11.3 million CRSs sold annually, amounted to less than $0.01 per CRS.

children die from un-survivable side impact conditions?" Conversely, a law student group stated that "even though the benefits are not extreme, the benefits still outweigh the comparatively small costs associated with this additional testing."

In response to Mr. Montalbano, NHTSA's cost benefit analysis assumes that children who do not use CRSs will not benefit from this rulemaking, as the standard applies to the CRS products, and does not require their use. However, as discussed previously, NHTSA is actively involved in increasing the use of CRSs and the correct use of restraint systems through other efforts. These efforts include developing and distributing training videos, producing public safety announcements and various campaigns directed to caregivers of children (in English, Spanish and other languages), leveraging all communication resources (such as social media and the NHTSA website) to provide information to parents and other caregivers, and expanding and supporting the child passenger safety technician (CPST) curriculum used to train and certify CRS fitting station technicians. Also, while this rulemaking does not directly address the 45 percent of fatalities that occur in very severe, un-survivable crashes, there may be some circumstances where a child might benefit from a CRS equipped with side impact protection by reducing the severity of the injuries in a severe crash.

UMTRI stated that costs involving the purchase of the Q3s ATD, new instrumentation (IR-TRACC) and buck manufacturing should be included in cost estimates as this adds to the yearly cost of testing. NHTSA conducted an analysis[290] to evaluate the annual cost of owning, operating, and maintaining the equipment and test devices needed for conducting the required tests and found that they would be very small when the costs are spread over the expected lifetime of these equipment and test devices.

Dorel stated its concern about a potential overlapping of a side impact rulemaking with the new FMVSS No. 213 on frontal impact protection, and the cost impacts of having to produce

---

[290] See the Final Regulatory Impact Analysis (FRIA) for more details on the analysis. The FRIA is available in the docket for this final rule and may be obtained by downloading it or by contacting Docket Management at the address or telephone number provided at the beginning of this document.

CRSs to rules that are introduced at different times. Dorel explained that it would need to evaluate the costs of a side impact test along any new proposed frontal impact test in conjunction with a new side impact test to fully comment on a cost analysis, and that without testing data of both side impact and frontal impact tests it could only estimate in broad terms at that time. Dorel added that in terms of redesign, retooling, and manufacturing startup costs, such an undertaking can range from product modification to product obsolescence. Dorel explained that a single ground up project of a single platform for a single set of tooling can range anywhere from $1.5-$2.5 million and that multiples of tooling can range $500 thousand upward to $1.5 million depending on the type and design of CRS. Dorel added that manufacturers would have to increase resources in a very short time and that typical development times from start to production in mass quantity could range from 18-24 months. Dorel argued that this could pose a major disruption of supply meeting customer demand, and that it prefers a synchronization of both standards so as to afford the design and development process and costs to consolidate to meet both new regulations.

In response to Dorel, we note that both this side impact final rule and a final rule upgrading the frontal impact seat assembly of FMVSS No. 213 (see NPRM, 85 FR 69388) are mandated by MAP-21. Nonetheless, while we believe the new side impact requirements adopted in this final rule will result in design changes to the CRS designs, NHTSA does not believe that the frontal impact changes will necessitate extensive CRS design changes as it appears most CRSs already meet the proposed rule's substantive requirements. (Some labeling changes may be needed.) Further, once NHTSA knows the timing of the frontal upgrade final rule, NHTSA will keep Dorel's concerns in mind to see if adjusting lead times would be appropriate and consistent with the Safety Act.

In developing the 2014 NPRM, NHTSA considered HIC15 requirements of 400 and 800 as alternatives to the preferred proposal of HIC15 of 570. The PRIA for the NPRM provided an assessment of benefits and costs of the HIC15 of 400 and 800 alternatives. Of the alternatives

presented for HIC15, NHTSA has decided in this final rule on its preferred alternative of 570. This threshold value achieves a reasonable balance of practicability, safety, and cost. The HIC15 threshold of 570 is used in FMVSS No. 208, "Occupant crash protection," for the 3-year-old child dummy. It is a scaled threshold based on FMVSS No. 208's criterion for the 50th percentile adult male dummy, which was adjusted to the 3-year-old using a process that accounts for differences in geometric size and material strength. HIC15 of 570 corresponds to an 11 percent risk of AIS 3+ injury and a 1.6 percent risk of fatality. The 570 scaled maximum will protect children in child restraints from an unreasonable risk of fatality and serious injury in side impacts.

Comparing the three alternatives (at the 7 percent discount rate), an 800 HIC15 limit results in: (a) many fewer equivalent lives saved than the 570 HIC15 limit (7.24 vs. 18.26); (b) higher cost per equivalent life saved ($488,000 vs. $242,000); and, (c) lower net benefits ($63 million vs. $162 million). Thus, on all three measures, 800 HIC15 achieves fewer NHTSA goals as compared to the 570 HIC15.

The 400 HIC15 alternative results in: (a) more equivalent lives saved than the 570 HIC15 limit (28.87 vs. 18.26); higher cost per equivalent life saved ($314,000 vs. $242,000); and, (c) higher net benefits ($250 million vs. $162 million). Thus, on two of the three measures, at first glance 400 HIC15 has appeal compared to the 570 HIC15 limit.

However, NHTSA is concerned about the effect of a 400 HIC15 limit on child restraint design and use and did not have information to address those concerns sufficiently. The agency is concerned that the cost estimates utilized may not take into account changes necessary to meet the 400 HIC15 limit. We believe that padding alone would be insufficient to meet a 400 HIC15 limit, and that a structural improvement to the side of the seats would be needed in addition to padding. We did not receive data on which to determine what structural or other changes would be needed to meet a 400 HIC15 reference, or whether the structural modifications can be implemented to meet the 400 HIC15 criterion at the cost we assumed.

Moreover, NHTSA is concerned that one method of potential compliance with a 400 HIC15 limit could cause unintended negative consequences not assessed in our estimate of costs. We believe that manufacturers could possibly increase padding to meet a 400 HIC15 limit. Thicker padding around the head area could reduce the space provided for the child's head, which may make the child restraint uncomfortable and confining for the child. The restricted space for the child's head could reduce the ability of the seated child to move his or her head freely, which could affect acceptability and use of the harness-equipped age-appropriate child restraints. Alternatively, if manufacturers decided to increase the thickness of the padding in the head area and widen the CRS to retain the current space between the child's head and side padding, the child restraint would have to be made wider and heavier. Again, this might affect the overall use of the child restraint. Considering all of these factors, NHTSA has chosen 570 HIC15 as the best overall reference value with known consequences that can be met with a reasonable thickness of padding alone.

This final rule reduces 3.7 fatalities and 41 (40.9) serious non-fatal injuries (MAIS[291] 4-5) annually (see Table 26 below).[292] The equivalent lives and the monetized benefits were estimated in accordance with guidance issued March 2021 by the Office of the Secretary[293] regarding the treatment of value of a statistical life in regulatory analyses. This final rule is estimated to save 15.1 equivalent lives annually. The monetized annual benefits of the rule at 3 and 7 percent discount rates are $169.0 million and $152.1 million, respectively (Table 27). The annual cost of this final rule is estimated at approximately $7.37 million. The countermeasures may include larger wings and padding with energy absorption characteristics that cost, on

---

[291] MAIS (Maximum Abbreviated Injury Scale) represents the maximum injury severity of an occupant based on the Abbreviated Injury Scale (AIS). AIS ranks individual injuries by body region on a scale of 1 to 6: 1=minor, 2=moderate, 3=serious, 4=severe, 5=critical, and 6=maximum (untreatable). MAIS 3+ injuries represent MAIS injuries at an AIS level of 3, 4, 5, or 6.

[292] NHTSA has developed a Final Regulatory Impact Analysis (FRIA) that discusses issues relating to the estimated costs, benefits, and other impacts of this regulatory action. The FRIA is available in the docket for this final rule and may be obtained by downloading it or by contacting Docket Management at the address or telephone number provided at the beginning of this document.

[293] http://www.dot.gov/sites/dot.dev/files/docs/VSL%20Guidance%202013.pdf

average, approximately $0.58 per CRS designed for children in a weight range that includes weights up to 40 lb (both forward-facing and rear-facing) (Table 28 below). The annual net benefits are estimated to be $144.8 million (7 percent discount rate) to $161.6 million (3 percent discount rate) as shown in Table 29. Because the rule is cost beneficial just by comparing costs to monetized economic benefits, and there is a net benefit, it is unnecessary to provide a net cost per equivalent life saved since no value would be provided by such an estimate.

Table 26: Estimated Benefits

Fatalities	3.7
Non-fatal injuries (MAIS 1 to 5)	41 (40.9)

Table 27: Estimated Monetized Benefits
In Millions of 2020 Dollars

	Economic Benefits	Value of Statistical Life	Total Benefits
3 Percent Discount Rate	$26.24	$142.72	$168.97
7 Percent Discount Rate	$23.63	$128.53	$152.16

Table 28: Estimated Costs (2020 Economics)

Average cost per CRS designed for children in a weight range that includes weights up to 40 lb	$0.58
Total incremental CRS cost	$6.54 million
Testing costs	$830,123
Total annual cost	$7.37 million

Table 29: Annualized Costs and Benefits
In millions of 2020 Dollars

	Annualized Costs	Annualized Benefits	Net Benefits
3% Discount Rate	$7.37	$168.97	$161.60
7% Discount Rate	$7.37	$152.16	$144.79

Regulatory Flexibility Act

Pursuant to the Regulatory Flexibility Act (5 U.S.C. 601 et seq., as amended by the Small Business Regulatory Enforcement Fairness Act (SBREFA) of 1996) whenever an agency is

required to publish a notice of proposed rulemaking or final rule, it must prepare and make available for public comment a regulatory flexibility analysis that describes the effect of the rule on small entities (i.e., small businesses, small organizations, and small governmental jurisdictions), unless the head of an agency certifies the rule will not have a significant economic impact on a substantial number of small entities. Agencies must also provide a statement of the factual basis for this certification.

I certify that this final rule would not have a significant economic impact on a substantial number of small entities. NHTSA estimates there to be 29 manufacturers of child restraints, none of which are small businesses. Based on our fleet testing, we believe that most of the CRSs that are subject to the side impact requirements will meet the requirements without substantial modification. For rear-facing infant seats and forward-facing restraints with harnesses that need to be modified, the agency estimates that the average incremental costs to each child restraint system would be only $0.58 per unit to meet this final rule. This incremental cost will not constitute a significant economic impact. Further, the incremental cost is not significant compared to the retail price of a child restraint system for infants and toddlers, which is in the range of $45 to $350.

For belt-positioning seats that will not be able to meet the side impact requirements adopted by this final rule, the simplest course for a manufacturer will be to re-label the restraint prior to introduction into interstate commerce so that it is marketed for children not in a weight class that will subject the CRS to the rule's requirements. That is, the CRSs could be marketed as belt-positioning seats for children weighing more than 18.1 kg (40 lb), instead of for children weighing above 13.6 kg (30 lb).[294]

---

[294] Currently, FMVSS No. 213 prohibits manufacturers from recommending belt-positioning seats for children weighing less than 13.6 kg (30 lb). NHTSA has proposed increasing this weight limit to 18.1 kg (40 lb) (85 FR 69388). If adopted, the weight threshold would also have the effect of excluding booster seats from the application of FMVSS No. 213a.

The agency believes that the cost of conducting the test described in this final rule (estimated at $1,543) spread over the number of units sold of that child restraint model will be very small, especially when compared to the price of a child restraint. We estimate that 127 CRS models comprise the 11.3 million CRSs that include recommended weights for children weighing up to 40 pounds. The average model life is estimated to be 5 years. Therefore, we estimate that, assuming manufacturers will be conducting the dynamic test specified in this final rule to certify their child restraints to the new side impact requirements, the annual cost of testing new CRS models will be $830,123. This testing cost, distributed among the 11.3 million CRSs sold annually with an average model life of 5 years, will be less than $0.01 per CRS.

National Environmental Policy Act

NHTSA has analyzed this final rule for the purposes of the National Environmental Policy Act and determined that it will not have any significant impact on the quality of the human environment.

Executive Order 13132 (Federalism)

NHTSA has examined this final rule pursuant to Executive Order 13132 (64 FR 43255, August 10, 1999) and concluded that no additional consultation with States, local governments or their representatives is mandated beyond the rulemaking process. The agency has concluded that the rulemaking will not have sufficient federalism implications to warrant consultation with State and local officials or the preparation of a federalism summary impact statement. The final rule will not have "substantial direct effects on the States, on the relationship between the national government and the States, or on the distribution of power and responsibilities among the various levels of government."

NHTSA rules can preempt in two ways. First, the National Traffic and Motor Vehicle Safety Act contains an express preemption provision: When a motor vehicle safety standard is in effect under this chapter, a State or a political subdivision of a State may prescribe or continue in effect a standard applicable to the same aspect of performance of a motor vehicle or motor

vehicle equipment only if the standard is identical to the standard prescribed under this chapter. 49 U.S.C. Section 30103(b)(1). It is this statutory command by Congress that preempts any non-identical State legislative and administrative law addressing the same aspect of performance. The express preemption provision described above is subject to a savings clause under which "[c]ompliance with a motor vehicle safety standard prescribed under this chapter does not exempt a person from liability at common law." 49 U.S.C. Section 30103(e). Pursuant to this provision, State common law tort causes of action against motor vehicle manufacturers that might otherwise be preempted by the express preemption provision are generally preserved.

However, the Supreme Court has recognized the possibility, in some instances, of implied preemption of such State common law tort causes of action by virtue of NHTSA's rules, even if not expressly preempted. This second way that NHTSA rules can preempt is dependent upon there being an actual conflict between an FMVSS and the higher standard that would effectively be imposed on motor vehicle manufacturers if someone obtained a State common law tort judgment against the manufacturer, notwithstanding the manufacturer's compliance with the NHTSA standard. Because most NHTSA standards established by an FMVSS are minimum standards, a State common law tort cause of action that seeks to impose a higher standard on motor vehicle manufacturers will generally not be preempted. However, if and when such a conflict does exist - for example, when the standard at issue is both a minimum and a maximum standard - the State common law tort cause of action is impliedly preempted. See Geier v. American Honda Motor Co., 529 U.S. 861 (2000).

Pursuant to Executive Order 13132 and 12988, NHTSA has considered whether this final rule could or should preempt State common law causes of action. The agency's ability to announce its conclusion regarding the preemptive effect of one of its rules reduces the likelihood that preemption will be an issue in any subsequent tort litigation. To this end, the agency has examined the nature (e.g., the language and structure of the regulatory text) and objectives of this final rule and finds that this rule, like many NHTSA rules, would prescribe only a minimum

safety standard. As such, NHTSA does not intend this final rule to preempt state tort law that would effectively impose a higher standard on motor vehicle manufacturers than that established by this final rule. Establishment of a higher standard by means of State tort law will not conflict with the minimum standard adopted here. Without any conflict, there could not be any implied preemption of a State common law tort cause of action.

Civil Justice Reform

With respect to the review of the promulgation of a new regulation, section 3(b) of Executive Order 12988, "Civil Justice Reform" (61 FR 4729, February 7, 1996) requires that Executive agencies make every reasonable effort to ensure that the regulation: (1) Clearly specifies the preemptive effect; (2) clearly specifies the effect on existing Federal law or regulation; (3) provides a clear legal standard for affected conduct, while promoting simplification and burden reduction; (4) clearly specifies the retroactive effect, if any; (5) adequately defines key terms; and (6) addresses other important issues affecting clarity and general draftsmanship under any guidelines issued by the Attorney General. This document is consistent with that requirement.

Pursuant to this Order, NHTSA notes as follows. The preemptive effect of this final rule is discussed above. NHTSA notes further that there is no requirement that individuals submit a petition for reconsideration or pursue other administrative proceeding before they may file suit in court.

Paperwork Reduction Act (PRA)

Under the PRA of 1995, a person is not required to respond to a collection of information by a Federal agency unless the collection displays a valid OMB control number. There are no "collections of information" (as defined at 5 CFR 1320.3(c)) in this final rule.

National Technology Transfer and Advancement Act

Under the National Technology Transfer and Advancement Act of 1995 (NTTAA) (Public Law 104-113), all Federal agencies and departments shall use technical standards that are

developed or adopted by voluntary consensus standards bodies, using such technical standards as a means to carry out policy objectives or activities determined by the agencies and departments. Voluntary consensus standards are technical standards (e.g., materials specifications, test methods, sampling procedures, and business practices) that are developed or adopted by voluntary consensus standards bodies, such as the International Organization for Standardization (ISO) and the Society of Automotive Engineers (SAE). The NTTAA directs us to provide Congress, through OMB, explanations when we decide not to use available and applicable voluntary consensus standards.

As explained above in this preamble and in the January 28, 2014 NPRM preceding this final rule, NHTSA reviewed the procedures and regulations developed globally to dynamically test child restraints in the side impact environment. Except for the Takata test procedure, the procedures and regulations did not replicate all of the dynamic elements of a side crash that we sought to include in the side impact test, or were not sufficiently developed for further consideration.

NHTSA considered AS/NZS 1754 for implementation into FMVSS No. 213 but did not find it acceptable. The test does not simulate an intruding door, which is an important component in the side impact environment. In addition, AS/NZS 1754 does not account for a longitudinal component, which we also believe is an important characteristic of a side crash. (As noted above, NHTSA's 2002 ANPRM, *supra*, was based on AS/NZS 1754. Commenters to the ANPRM believed that a dynamic test should account for some degree of vehicle intrusion into the occupant compartment.) Australia's CREP test also was limited by its lack of an intruding door, which is a component that is important in the side impact environment.

Test procedures from other countries and entities were also too limited. Germany's ADAC test procedure lacks an intruding door. While the ISO/TNO test procedure accounts for the deceleration and intrusion experienced by a car in a side impact crash, one of its limitations is that the angular velocity of the hinged door is difficult to control, which results in poor

repeatability. In addition, these methods do not include a longitudinal velocity component to the intruding door, which is present in most side impacts and which NHTSA sought to replicate in the FMVSS No. 213a test. NHTSA considered the EU's test procedure but decided not to pursue it, since the test is of lower severity than the crash conditions the agency sought to replicate and of lower severity than the FMVSS No. 214 MDB side impact crash test of a small passenger vehicle. Moreover, the test procedure is only intended for evaluating CRSs with rigid ISOFIX attachments, which are not prevalent in the U.S. Further, the sliding anchors do not seem to produce a representative interaction between the door and CRS during a side impact, and may introduce variability in the test results.

NPACS completed a test procedure in 2006. The NPACS final approach is comparable to the International Standards Organization (ISO) side impact efforts which include a rotating hinged door to simulate door intrusion into the CRS. As discussed in the NPRM, the rotating hinged door procedures account for the deceleration and intrusion experienced by a car in a side impact crash but one of its limitations is that the angular velocity of the hinged door is difficult to control resulting in poor repeatability.[295] In addition, these methods do not include a longitudinal velocity component to the intruding door, which is present in most side impact crashes. The NPACS procedure also specifies a sled velocity change corridor with a longer duration than desired. NHTSA found that for a small vehicle FMVSS No. 214 MDB test, the change in velocity duration was between 40-50 milliseconds, while NPACS has a duration of 70-75 milliseconds. While the agency did not evaluate these procedures, the agency did not find them compelling enough to pursue or change from the selected Takata sled-on-sled method, which has proven to be repeatable and reproducible and can be adapted to be done in an acceleration type or a deceleration type sled system.

[295] Sandner, V., Ratzek, A., Kolke, R., Kraus, W., Lang, M. "New Programm for the assessment of child restraint systems (NPACS) – Development/research/results – First step for future activities?" Paper Number 09-0298.

NHTSA based the side impact test on a test procedure that was developed in the industry. In so doing, NHTSA saved agency resources by making use of pertinent technical information that was already available. This effort to save resources is consistent with the NTTAA's goal of reducing when possible the agency's cost of developing its own standards.

Unfunded Mandates Reform Act

Section 202 of the Unfunded Mandates Reform Act of 1995 (UMRA), Pub. L. 104-4, requires Federal agencies to prepare a written assessment of the costs, benefits, and other effects of proposed or final rules that include a Federal mandate likely to result in the expenditure by State, local, or tribal governments, in the aggregate, or by the private sector, of more than $100 million annually (adjusted for inflation with base year of 1995). Adjusting this amount by the implicit gross domestic product price deflator for the year 2020 results in $158 million (113.635/71.868=1.581). This final rule does not result in a cost of $158 million or more to either State, local, or tribal governments, in the aggregate, or the private sector. Thus, this rule is not subject to the requirements of sections 202 of the UMRA.

Executive Order 13609 (Promoting International Regulatory Cooperation)

The policy statement in section 1 of E.O. 13609 provides, in part:

> The regulatory approaches taken by foreign governments may differ from those taken by U.S. regulatory agencies to address similar issues. In some cases, the differences between the regulatory approaches of U.S. agencies and those of their foreign counterparts might not be necessary and might impair the ability of American businesses to export and compete internationally. In meeting shared challenges involving health, safety, labor, security, environmental, and other issues, international regulatory cooperation can identify approaches that are at least as protective as those that are or would be adopted in the absence of such cooperation. International regulatory cooperation can also reduce, eliminate, or prevent unnecessary differences in regulatory requirements.

NHTSA requested public comment on the "regulatory approaches taken by foreign governments" concerning the subject matter of this rulemaking but received no comments on this issue. In the discussion above on the NTTAA, we explained that we reviewed the procedures and regulations developed globally to test child restraints dynamically in the side impact environment and found the Takata test procedure to be the most suitable for our purposes.

Incorporation by Reference

Under regulations issued by the Office of the Federal Register (1 CFR 51.5(a)), an agency, as part of a final rule that includes material incorporated by reference, must summarize in the preamble of the final rule the material it incorporates by reference and discuss the ways the material is reasonably available to interested parties or how the agency worked to make materials available to interested parties.

In this final rule, NHTSA incorporates by reference material entitled, "Parts List and Drawings, NHTSA Standard Seat Assembly; FMVSS No. 213a - Side impact No. NHTSA-213a-2021, CHILD SIDE IMPACT SLED," dated December 2021, that consists of engineering drawings and specifications for the side impact seat assembly (SISA) that NHTSA will use to assess the compliance of child restraints with Standard No. 213a. The SISA consists of a sliding seat, with one seating position, and a simulated door assembly.

NHTSA has placed a copy of the material in the docket for this final rule. Interested persons can download a copy of the material or view the material online by accessing www.Regulations.gov, telephone 1-877-378-5457, or by contacting NHTSA's Chief Counsel's Office at the phone number and address set forth in the "For Further Information" section of this document. The material is also available for inspection at the Department of Transportation, Docket Operations, Room W12-140, 1200 New Jersey Avenue, S.E., Washington, D.C. Telephone: 202-366-9826. This final rule also incorporates SAE Recommended Practice J211/1, revised March 1995, "Instrumentation for Impact Tests-Part 1 – Electronic Instrumentation," This SAE standard is already incorporated in 49 CFR 571.5(l)(4). The SAE J211/1 standard provides guidelines and recommendations for techniques of measurements used in impact tests to achieve uniformity in instrumentation practice and in reporting results. Signals from impact tests have to be filtered following the standard's guidelines to eliminate noise from sensor signals. Following J211/1 guidelines provides a basis for meaningful comparisons of test results from

different sources. The SAE material is available for review at NHTSA and is available for purchase from SAE International.

Formatting

Note: Due to new Federal Register formatting guidelines, the “figure number and title” labels in the regulatory text now appear directly above the corresponding figure instead of below the corresponding figure.

Regulation Identifier Number

The Department of Transportation assigns a regulation identifier number (RIN) to each regulatory action listed in the Unified Agenda of Federal Regulations. The Regulatory Information Service Center publishes the Unified Agenda in April and October of each year. You may use the RIN contained in the heading at the beginning of this document to find this action in the Unified Agenda.

Plain Language

Executive Order 12866 requires each agency to write all rules in plain language. Application of the principles of plain language includes consideration of the following questions:

- Have we organized the material to suit the public's needs?
- Are the requirements in the rule clearly stated?
- Does the rule contain technical language or jargon that isn't clear?
- Would a different format (grouping and order of sections, use of headings, paragraphing) make the rule easier to understand?
- Would more (but shorter) sections be better?
- Could we improve clarity by adding tables, lists, or diagrams?
- What else could we do to make the rule easier to understand?

If you have any responses to these questions, please write to us with your views.

List of Subjects in 49 CFR Part 571

Imports, Motor vehicle safety, Motor vehicles, and Tires; Incorporation by reference.

In consideration of the foregoing, NHTSA amends 49 CFR part 571 as set forth below.

PART 571 - - FEDERAL MOTOR VEHICLE SAFETY STANDARDS

1. The authority citation for Part 571 continues to read as follows:

Authority: 49 U.S.C. 322, 30111, 30115, 30117 and 30166; delegation of authority at 49 CFR 1.95.

2. Section 571.5 is amended by:

a. Revising paragraph (a);

b; Adding paragraph (k)(5);

c. Revising paragraph (l)(4); and

d. In addition to the previous amendments, remove the text "http://" and add in its place the text "https://" wherever it appears throughout this section.

The revisions and addition read as follows:

§ 571.5 Matter incorporated by reference.

(a) Certain material is incorporated by reference into this part with the approval of the Director of the Federal Register in accordance with 5 U.S.C. 552(a) and 1 CFR part 51. To enforce any edition other than that specified in this section, the National Highway Traffic Safety Administration (NHTSA) must publish a document in the Federal Register and the material must be available to the public. All approved incorporation by reference (IBR) material is available for inspection at NHTSA and at the National Archives and Records Administration (NARA). Contact NHTSA at: NHTSA, 1200 New Jersey Avenue SE., Washington, DC 20590, (202) 366-2588, website: *https://www.nhtsa.gov/about-nhtsa/electronic-reading-room*. For information on the availability of this material at NARA, email: fr.inspection@nara.gov, or go to: www.archives.gov/federal-register/cfr/ibr-locations.html. The material may be obtained from the sources in the following paragraphs of this section.

* * * * *

(k) * * *

(5) “Parts List and Drawings, NHTSA Standard Seat Assembly; FMVSS No. 213a – Side impact No. NHTSA-213a-2021, CHILD SIDE IMPACT SLED” dated December 2021; into § 571.213a.

(l) * * *

(4) SAE Recommended Practice J211/1, “Instrumentation for Impact Tests-Part 1 – Electronic Instrumentation”; revised March 1995; into §§ 571.202a; 571.208; 571.213a; 571.218; 571.403.

* * * * *

3. Section 571.213 is amended by adding paragraph S5(g) to read as follows:

§ 571.213 Standard No. 213; Child restraint systems.

* * * * *

S5 * * *

(g) Each add-on child restraint system manufactured for use in motor vehicles, that is recommended for children in a weight range that includes weights up to 18 kilograms (40 pounds), or for children in a height range that includes heights up to 1100 millimeters, shall meet the requirements in this standard and the additional side impact protection requirements in Standard No. 213a (§ 571.213a). Excepted from Standard No. 213a are harnesses and car beds.

* * * * *

4. Section 571.213a is added to read as follows:

§ 571.213a Standard No. 213a; Child restraint systems—side impact protection.

S1. *Scope.* This standard specifies side impact protection requirements for child restraint systems recommended for children in a weight range that includes weights up to 18 kilograms (40 pounds) or by children in a height range that includes heights up to 1100 millimeters (43 inches).

S2. *Purpose.* The purpose of this standard is to reduce the number of children killed or injured in motor vehicle side impacts. Each child restraint system subject to this standard shall

also meet all applicable requirements in FMVSS No. 213 (§ 571.213).

S3. *Application.* This standard applies to add-on child restraint systems that are either recommended for use by children in a weight range that includes weights up to 18 kilograms (40 pounds) *regardless of height*, or by children in a height range that includes heights up to 1100 millimeters *regardless of weight*, except for car beds and harnesses.

S4. *Definitions.*

Add-on child restraint system means any portable child restraint system.

Belt-positioning seat means a child restraint system that positions a child on a vehicle seat to improve the fit of a vehicle Type II belt system on the child and that lacks any component, such as a belt system or a structural element, designed to restrain forward movement of the child's torso in a forward impact.

Car bed means a child restraint system designed to restrain or position a child in the supine or prone position on a continuous flat surface.

Child restraint anchorage system is defined in S3 of FMVSS No. 225 (§ 571.225).

Child restraint system is defined in S4 of FMVSS No. 213 (§ 571.213).

Contactable surface means any child restraint system surface (other than that of a belt, belt buckle, or belt adjustment hardware) that may contact any part of the head or torso of the appropriate test dummy, specified in S7, when a child restraint system is tested in accordance with S6.1.

Harness means a combination pelvic and upper torso child restraint system that consists primarily of flexible material, such as straps, webbing or similar material, and that does not include a rigid seating structure for the child.

Rear-facing child restraint system means a child restraint system that positions a child to face in the direction opposite to the normal (forward) direction of travel of the motor vehicle.

Seat orientation reference line or *SORL* means the horizontal line through Point Z as illustrated in Figure 1 to § 571.213a.

Tether anchorage is defined in S3 of FMVSS No. 225 (§ 571.225).

Tether strap is defined in S3 of FMVSS No. 225 (§ 571.225).

Torso means the portion of the body of a seated anthropomorphic test dummy, excluding the thighs, that lies between the top of the child restraint system seating surface and the top of the shoulders of the test dummy.

S5. *Requirements.* (a) Each child restraint system subject to this section shall meet the requirements in this section when, as specified, tested in accordance with S6 and this paragraph. Each child restraint system shall meet the requirements when oriented in each direction recommended by the manufacturer (i.e. forward, rearward), using any of the seat back angle adjustment positions and restraint belt routing positions designated for that direction, pursuant to S5.6 of FMVSS No. 213 (§ 571.213), and tested with the test dummy specified in S7 of this section.

(b) Each child restraint system subject to this section shall also meet all applicable requirements in FMVSS No. 213 (§ 571.213).

S5.1 *Dynamic performance.*

S5.1.1 *Child restraint system integrity.* When tested in accordance with S6.1, each child restraint system shall meet the requirements of paragraphs (a) through (c) of this section.

(a) With any padding or other flexible overlay material removed, exhibit no complete separation of any load bearing structural element and no partial separation exposing either surfaces with a radius of less than 6 millimeters or surfaces with protrusions greater than 9 millimeters above the immediate adjacent surrounding contactable surface of any structural element of the child restraint system.

(b)(1) If adjustable to different positions, remain in the same adjustment position during the testing that it was in immediately before the testing, except as otherwise specified in paragraph (b)(2).

(2)(i) Subject to paragraph (b)(2)(ii), a rear-facing child restraint system may have a means for repositioning the seating surface of the system that allows the system's occupant to move from a reclined position to an upright position and back to a reclined position during testing.

(ii) No opening that is exposed and is larger than 6 millimeters before the testing shall become smaller during the testing as a result of the movement of the seating surface relative to the child restraint system as a whole.

(c) If a front facing child restraint system, not allow the angle between the system's back support surfaces for the child and the system's seating surface to be less than 45 degrees at the completion of the test.

S5.1.2 *Injury criteria.* When tested in accordance with S6.1 and with the test dummy specified in S7, each child restraint system that, in accordance with S5.5.2 of Standard No. 213 (§ 571.213), is recommended for use by children whose mass is more than 13.6 kilograms or whose height is more than 870 mm shall—

(a) Limit the resultant acceleration at the location of the accelerometer mounted in the test dummy head as specified in Part 572 such that, for any two points in time, t1 and t2, during the event which are separated by not more than a 15 millisecond time interval and where t1 is less than t2, the maximum calculated head injury criterion (HIC) shall not exceed 570, determined using the resultant head acceleration at the center of gravity of the dummy head, a_r, expressed as a multiple of g (the acceleration of gravity), calculated using the expression:

$$HIC = \left[\frac{1}{t_2 - t_1}\int_{t_1}^{t_2} a_r\, dt\right]^{2.5} (t_2 - t_1)$$

(b) The maximum chest compression (or deflection) from the output of the thoracic InfraRed Telescoping Rod for Assessment of Chest Compression (IR-TRACC) shall not exceed 23 millimeters.

S5.1.3 *Occupant containment.* When tested in accordance with S6.1 and the requirements specified in this section, each child restraint system recommended for use by children in a specified mass range that includes any children having a mass greater than 5 kilograms but not greater than 13.6 kilograms (30 lb), shall retain the test dummy's head such that there is no direct contact of the head to any part of the side impact seat assembly described in S6.1.1(a).

S5.1.4 *Protrusion limitation.* Any portion of a rigid structural component within or underlying a contactable surface shall, with any padding or other flexible overlay material removed, have a height above any immediately adjacent restraint system surface of not more than 9 millimeters and no exposed edge with a radius of less than 6 millimeters.

S5.1.5 *Belt buckle release.* Any buckle in a child restraint system belt assembly designed to restrain a child using the system shall:

(a) When tested in accordance with the appropriate sections of S6.2, after the dynamic test of S6.1, release when a force of not more than 71 Newtons is applied.

(b) Not release during the testing specified in S6.1.

S5.1.6 Installation. Each add-on child restraint system shall be capable of meeting the requirements of this standard when installed solely by each of the means indicated in the following table:

Table 1 to S5.1.6

Type of add-on child restraint system	**Means of Installation**			
	Type II seat belt assembly	**Type II seat belt assembly plus a tether if needed**	**Lower anchorages of the child restraint anchorage system**	**Lower anchorages of the child restraint anchorage system plus a tether if needed**

Rear-facing restraints	X		X	
Forward-facing restraints		X		X

S6. *Test conditions and procedures.*

S6.1 *Dynamic side impact test for child restraint systems.* The test conditions and test procedure for the dynamic side impact test are specified in S6.1.1 and S6.1.2, respectively.

S6.1.1 *Test conditions.*

(a) *Test device.* (1) The test device is a side impact seat assembly (SISA) consisting of a sliding seat, with one seating position, and a simulated door assembly as described in "NHTSA Standard Seat Assembly; FMVSS No. 213a—Side impact No. NHTSA-213a-2021" (incorporated by reference, see § 571.5). The simulated door assembly is rigidly attached to the floor of the SISA and the sliding seat is mounted on rails to allow it to move relative to the floor of the SISA in the direction perpendicular to the SORL. The SISA is mounted on a dynamic test platform so that the SORL of the seat is 10 +/- 0.1 degrees from the perpendicular direction of the test platform travel.

(2) As illustrated in the SISA drawing package, attached to the seat belt anchorage points provided on the SISA is a Type II seat belt assembly. These seat belt assemblies are certified to meet the requirements of Standard No. 209 (§ 571.209) and have webbing with a width of not more than 2 inches, and are attached to the anchorage points without the use of retractors or reels of any kind. As illustrated in the SISA drawing package, attached to the SISA is a child restraint anchorage system conforming to the specifications of Standard No. 225 (§ 571.225).

(b) Accelerate the test platform to achieve a relative velocity of 31.3 ± 0.64 km/h in the direction perpendicular to the SORL between the SISA sliding seat and the door assembly at the time they come in contact (time = T_0). The front face of the armrest on the door is 38 ± 6

millimeters from the edge of the seat towards the SORL at time = T_0. The test platform velocity in the direction perpendicular to the SORL during the time of interaction of the door with the child restraint system is no lower than 2.5 km/h less than its velocity at time = T_0.

(c) The sliding seat acceleration perpendicular to the SORL is any pulse within the acceleration corridor shown in Figure 3 and the change in relative velocity perpendicular to the SORL between the SISA sliding seat and the door assembly is any velocity within the relative velocity corridor shown in Figure 4.

(d) Performance tests under S6.1 are conducted at any ambient temperature from 20.6 °C to 22.2 °C and at any relative humidity from 10 percent to 70 percent.

(e) The child restraint shall meet the requirements of S5 when oriented in each direction recommended by the manufacturer (i.e. forward, rearward), using any of the seat back angle adjustment positions and restraint belt routing positions designated for that direction, pursuant to S5.6 of FMVSS No. 213 (§ 571.213), and tested with the test dummy specified in S7 of this section.

S6.1.2 *Dynamic test procedure.*

(a) The child restraint centerline is positioned 300 ± 2 millimeters from the SISA sliding seat edge (impact side). The child restraint system is attached in any of the following manners, at NHTSA's option.

(1) Install the child restraint system using the child restraint anchorage system in accordance with the manufacturer's instructions provided with the child restraint system pursuant to S5.6 of Standard No. 213 (§ 571.213), except as provided in this paragraph. For forward-facing restraints, attach the tether strap, if provided, to the tether anchorage on the SISA. No supplemental device is used to install the child restraint system. Tighten belt systems of the lower anchorage attachments used to attach the restraint to the SISA sliding seat to any tension of not less than 53.5 Newtons and not more than 67 Newtons. Tighten the belt of the top tether

attachment used to attach the restraint to the SISA sliding seat to any tension of not less than 45 Newtons and not more than 53.5 Newtons.

(2) For forward-facing and rear-facing child restraint systems, install the child restraint system using the Type II belt system in accordance with the manufacturer's instructions provided with the child restraint system pursuant to S5.6 of Standard No. 213 (§ 571.213), except as provided in this paragraph. For forward-facing restraints, attach the top tether strap, if provided, to the top tether anchorage on the SISA. For all child restraints, no supplemental device to install the child restraint system is used. Tighten the Type II belt used to attach the restraint to the SISA sliding seat to any tension of not less than 53.5 Newtons and not more than 67 Newtons. Tighten the belt of the top tether attachment used to attach the forward-facing restraint to the SISA sliding seat to any tension of not less than 45 Newtons and not more than 53.5 Newtons. Rear-facing infant carriers with a detachable base shall only be tested using the base.

(3) For rear-facing restraints, install the child restraint system using only the lower anchorages of the child restraint anchorage system in accordance with the manufacturer's instructions provided with the child restraint system pursuant to S5.6 of Standard No. 213 (§ 571.213). No tether strap is used. No supplemental device is used to install the child restraint system. Tighten belt systems used to attach the restraint to the SISA-sliding seat to any tension of not less than 53.5 Newtons and not more than 67 Newtons. Rear-facing infant carriers with a detachable base shall only be tested using the base.

(b) Select any dummy specified in S7 for testing child restraint systems for use by children of the heights or weights for which the system is recommended in accordance with S5.5 of Standard No. 213 (§ 571.213). The dummy is assembled, clothed and prepared as specified in S8 and part 572 of this chapter, as appropriate.

(c) The dummy is placed and positioned in the child restraint system as specified in S9. Attach the child restraint belts used to restrain the child within the system, if appropriate, as specified in S9.

(d) Shoulder and pelvic belts that directly restrain the dummy are adjusted as follows: Tighten the belt system used to restrain the child within the child restraint system to any tension of not less than 9 Newtons and not more than 18 Newtons on the webbing at the top of each dummy shoulder and the pelvic region. Tighten the belt systems used to attach the restraint to the SISA sliding seat to any tension of not less than 53.5 Newtons and not more than 67 Newtons.

(e) Accelerate the test platform in accordance with S6.1.1(b).

(f) All instrumentation and data reduction is in conformance with SAE J211/1 (1995) (incorporated by reference, see § 571.5).

S6.2 *Buckle release test procedure.*

(a) After completion of the testing specified in S6.1 and before the buckle is unlatched, tie a self-adjusting sling to each wrist and ankle of the test dummy in the manner illustrated in Figure 4 to Standard No. 213 (§ 571.213), without disturbing the belted dummy and the child restraint system.

(b) Pull the sling that is tied to the dummy restrained in the child restraint system and apply the following force: 90 Newtons for a system tested with a 12-month-old dummy; 200 Newtons for a system tested with a 3-year-old dummy. For an add-on child restraint, the force is applied in the manner illustrated in Figure 4 to Standard No. 213 (§ 571.213) and by pulling the sling horizontally and parallel to the SORL of the SISA.

(c) While applying the force specified in S6.2(b), and using the device shown in Figure 8 of Standard No. 213 (§ 571.213) for pushbutton-release buckles, apply the release force in the manner and location specified in S6.2.1 of Standard No. 213 (§ 571.213), for that type of buckle. Measure the force required to release the buckle.

S7 *Test dummies.*

S7.1 *Dummy selection.* At NHTSA's option, any dummy specified in S7.1(a) or S7.1(b) may be selected for testing child restraint systems for use by children of the height or mass for

which the system is recommended in accordance with S5.5 of Standard No. 213 (§ 571.213). A child restraint that meets the criteria in two or more of the following paragraphs may be tested with any of the test dummies specified in those paragraphs.

(a) A child restraint that is recommended by its manufacturer in accordance with S5.5 of Standard No. 213 (§ 571.213) for use either by children in a specified mass range that includes any children having a mass greater than 5 kilograms but not greater than 13.6 kilograms, or by children in a specified height range that includes any children whose height is greater than 650 millimeters but not greater than 870 millimeters, is tested with a CRABI 12-month-old test dummy conforming to 49 CFR part 572 subpart R.

(b) A child restraint that is recommended by its manufacturer in accordance with S5.5 of Standard No. 213 (§ 571.213) for use either by children in a specified mass range that includes any children having a mass greater than 13.6 kilograms but not greater than 18 kilograms, or by children in a specified height range that includes any children whose height is greater than 870 millimeters but not greater than 1100 millimeters, is tested with a 3-year-old test dummy (Q3s) conforming to 49 CFR part 572 subpart W.

S8 *Dummy clothing and preparation.*

S8.1 *Type of clothing.*

(a) *12-month-old dummy (CRABI) (49 CFR part 572, subpart R).* When used in testing under this standard, the dummy specified in 49 CFR part 572, subpart R, is clothed in a cotton-polyester based tight fitting sweat shirt with long sleeves and ankle long pants whose combined weight is not more than 0.25 kilograms.

(b) *3-year-old side impact dummy (Q3s) (49 CFR part 572, subpart W).* When used in testing under this standard, the dummy specified in 49 CFR part 572, subpart W, is clothed as specified in that subpart, except without shoes.

S8.2 *Preparing dummies.* When using the Q3s dummy, install the IR-TRACC on the test impact side according to 49 CFR part 572, subpart W. Before being used in testing under

this standard, test dummies must be conditioned at any ambient temperature from 20.6° to 22.2 °C and at any relative humidity from 10 percent to 70 percent, for at least 4 hours.

S9 *Positioning the dummy and attaching the belts used to restrain the child within the child restraint system and/or to attach the system to the SISA sliding seat.*

S9.1 *12-month-old dummy (CRABI) (49 CFR part 572, subpart R).* Position the test dummy according to the instructions for child positioning that the manufacturer provided with the child restraint system under S5.6.1 or S5.6.2 of Standard No. 213 (§ 571.213), while conforming to the following:

(a) When testing rear-facing child restraint systems, place the 12-month-old dummy in the child restraint system so that the back of the dummy torso contacts the back support surface of the system. Attach all appropriate child restraint belts used to restrain the child within the child restraint system and tighten them as specified in S6.1.2 of this standard. Attach all appropriate belts used to attach the child restraint system to the SISA sliding seat and tighten them as specified in S6.1.2.

(b) When testing forward-facing child restraint systems, extend the dummy's arms vertically upwards and then rotate each arm downward toward the dummy's lower body until the arm contacts a surface of the child restraint system or the SISA. Ensure that no arm is restrained from movement in other than the downward direction, by any part of the system or the belts used to anchor the system to the SISA sliding seat.

(c) When testing forward-facing child restraint systems, extend the arms of the 12-month-old test dummy as far as possible in the upward vertical direction. Extend the legs of the test dummy as far as possible in the forward horizontal direction, with the dummy feet perpendicular to the centerline of the lower legs. Using a flat square surface with an area of 2,580 square mm, apply a force of 178 Newtons, perpendicular to the plane of the back of the standard seat assembly, first against the dummy crotch and then at the dummy thorax in the midsagittal plane of the dummy. Attach all appropriate child restraint belts used to restrain the child within the

child restraint system and tighten them as specified in S6.1.2(d). Attach all appropriate belts used to attach the child restraint system (per S5.1.6) to the SISA sliding seat and tighten them as specified in S6.1.2.

(d) After the steps specified in paragraph (c), rotate each dummy limb downwards in the plane parallel to the dummy's midsagittal plane until the limb contacts a surface of the child restraint system or the standard seat assembly. Position the limbs, if necessary, so that limb placement does not inhibit torso or head movement in tests conducted under S6.

S9.2 *3-year-old side impact dummy (Q3s) (49 CFR part 572, subpart W) in forward-facing child restraints.* Position the test dummy according to the instructions for child positioning that the restraint manufacturer provided with the child restraint system in accordance with S5.6.1 or S5.6.2 of Standard No. 213 (§ 571.213), while conforming to the following:

(a) Holding the test dummy torso upright until it contacts the child restraint system's design seating surface, place the test dummy in the seated position within the child restraint system with the midsagittal plane of the test dummy head coincident with the center of the child restraint system.

(b) Extend the arms of the test dummy as far as possible in the upward vertical direction. Extend the legs of the dummy as far as possible in the forward horizontal direction, with the dummy feet perpendicular to the center line of the lower legs.

(c) For a child restraint system with a fixed or movable surface, position each movable surface in accordance with the instructions that the manufacturer provided under S5.6.1 or S5.6.2 of Standard No. 213 (§ 571.213). For forward-facing restraints, attach all appropriate child restraint belts used to restrain the child within the child restraint system and tighten them as specified in S6.1.2(d). Attach all appropriate belts or lower anchorage attachments used to attach the child restraint system to the SISA or to restrain the child and tighten them as specified in S6.1.2. For belt-positioning seats, attach all appropriate vehicle belts used to restrain the child within the child restraint system and tighten them as specified in S6.1.2(d).

(d) After the steps specified in paragraph (c) of this section, rotate each of the dummy's legs downwards in the plane parallel to the dummy's midsagittal plane until the limb contacts a surface of the child restraint or the SISA. Rotate each of the dummy's arms downwards in the plane parallel to the dummy's midsagittal plane until the arm is engaged on the detent that positions the arm at a 25 degree angle with respect to the thorax.

S9.3 *3-year-old side impact dummy (Q3s) (49 CFR part 572, subpart W) in rear-facing child restraints.* Position the test dummy according to the instructions for child positioning that the restraint manufacturer provided with the child restraint system in accordance with S5.6.1 or S5.6.2 of Standard No. 213 (§ 571.213), while conforming to the following:

(a) Extend the arms of the test dummy as far as possible in the upward vertical direction. Extend the legs of the dummy as far as possible in the forward horizontal direction, with the dummy feet perpendicular to the center line of the lower legs.

(b) Place the Q3s dummy in the child restraint system so that the back of the dummy torso contacts the back support surface of the system. Place the test dummy in the child restraint system with the midsagittal plane of the test dummy head coincident with the center of the child restraint system. Rotate each of the dummy's legs downwards in the plane parallel to the dummy's midsagittal plane until the leg or feet of the dummy contacts the seat back of the SISA or a surface of the child restraint system.

(c) For a child restraint system with a fixed or movable surface, position each movable surface in accordance with the instructions that the manufacturer provided under S5.6.1 or S5.6.2 of Standard No. 213 (§ 571.213). Attach all appropriate child restraint belts used to restrain a child within the child restraint system and tighten them as specified in S6.1.2(d). Attach all appropriate belts or lower anchorage attachments used to attach the child restraint system to the SISA and tighten them as specified in S6.1.2.

(d) After the steps specified in paragraph (c) of this section, rotate each dummy arm downwards in the plane parallel to the dummy's midsagittal plane until the limb is positioned at a 25-degree angle with respect to the thorax.

Figure 1 to § 571.213a. Side Impact Seat Assembly

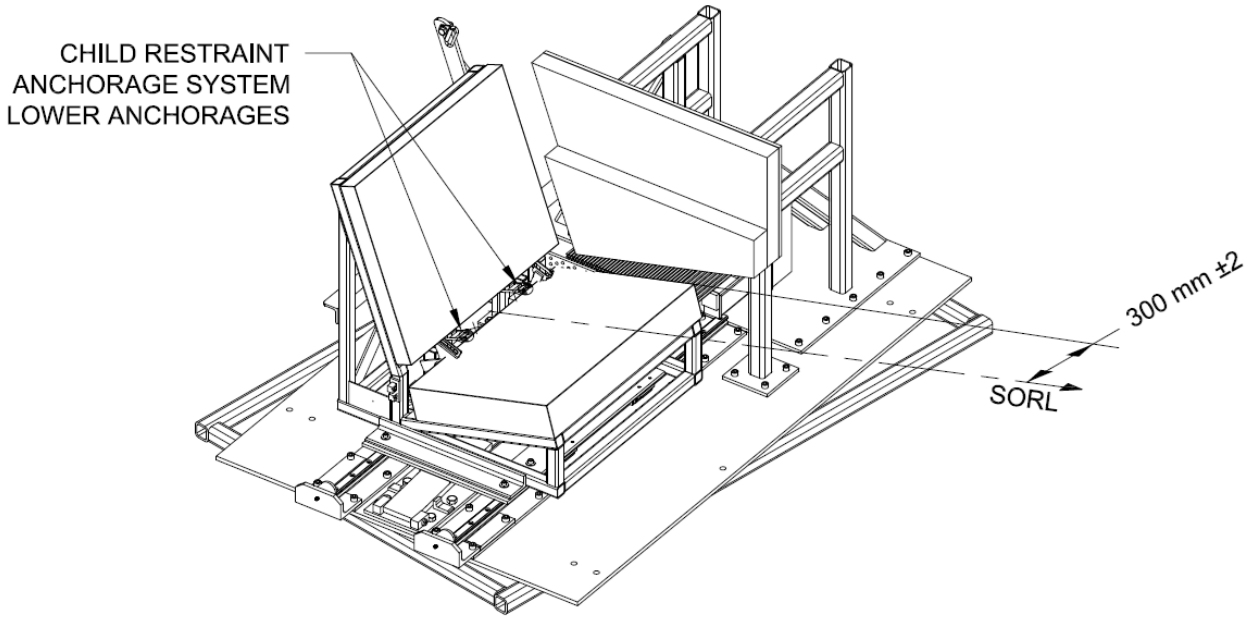

Figure 2A to § 571.213a. Side Impact Seat Assembly Plan View

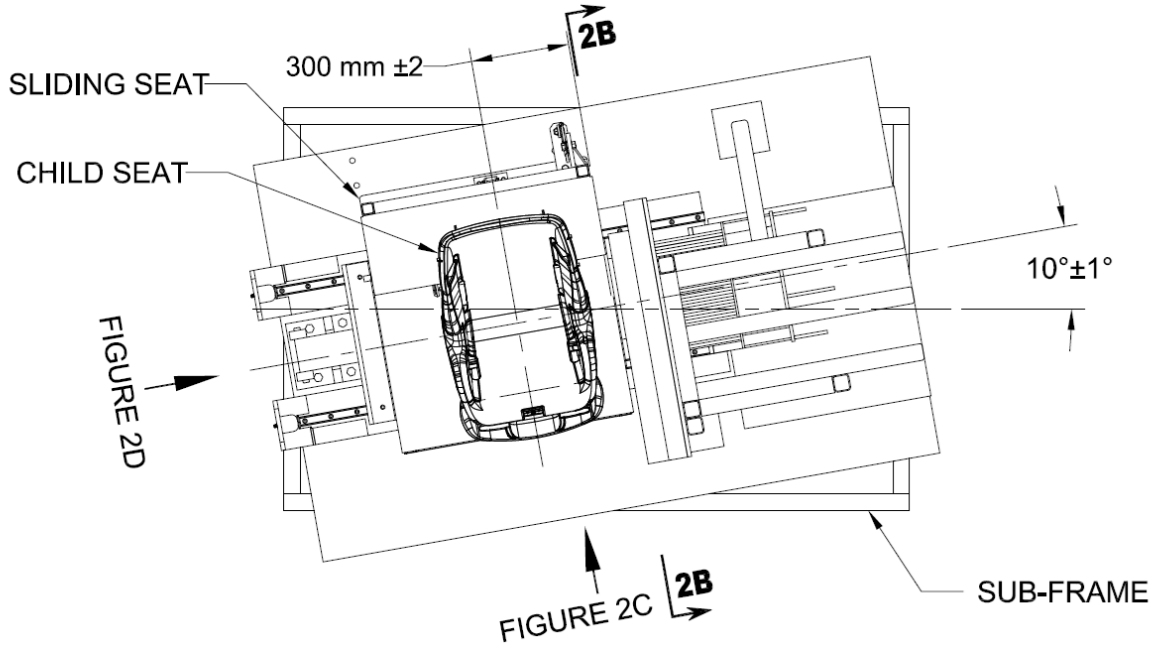

Figure 2B to § 571.213a. Side Impact Seat Assembly Door Panel View

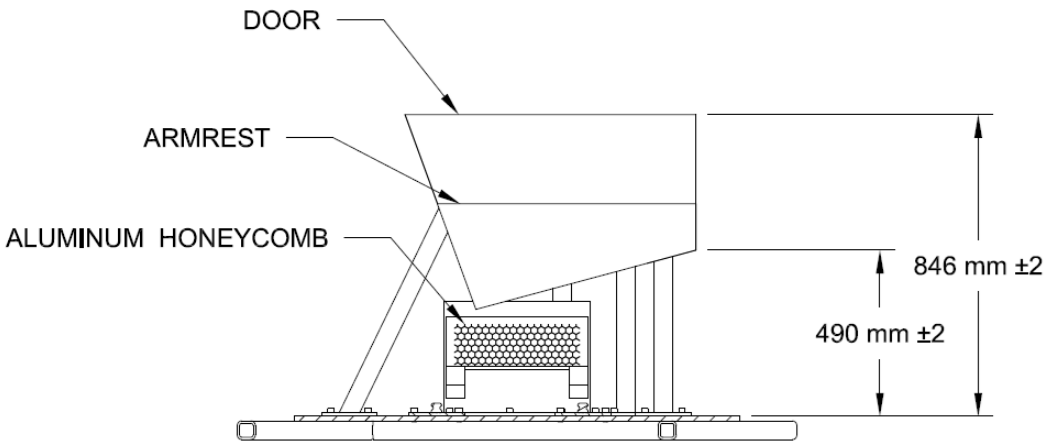

Figure 2C to § 571.213a. Side Impact Seat Assembly Frontal View

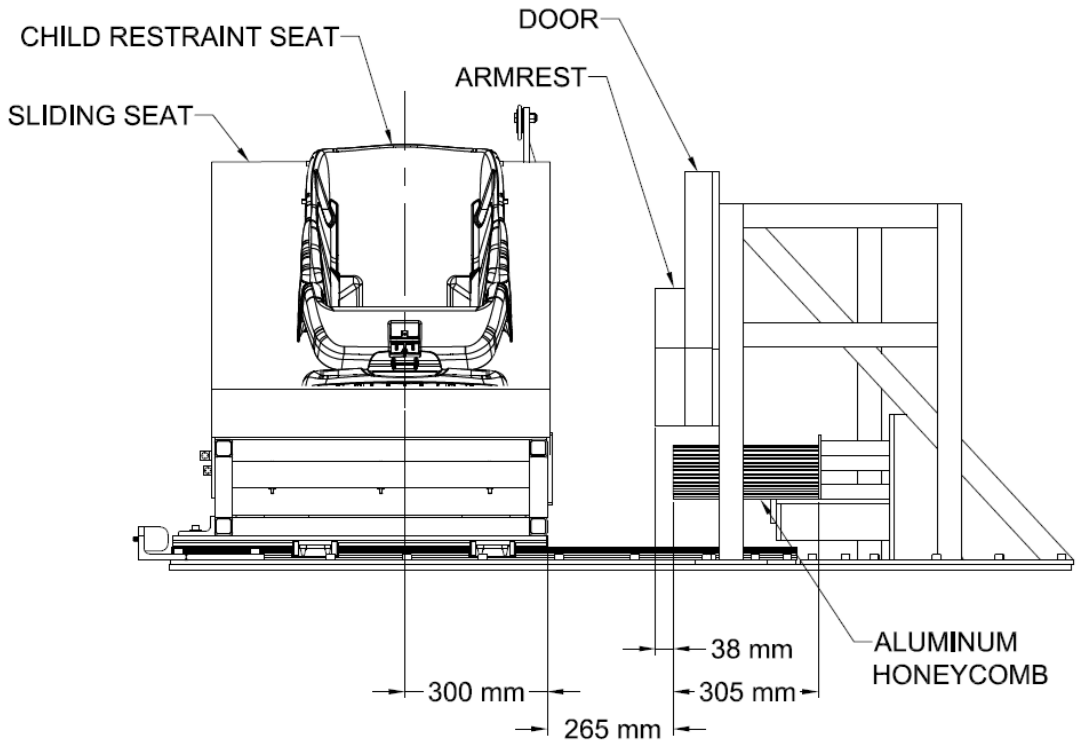

Figure 2D to § 571.213a. Side Impact Seat Assembly Side View

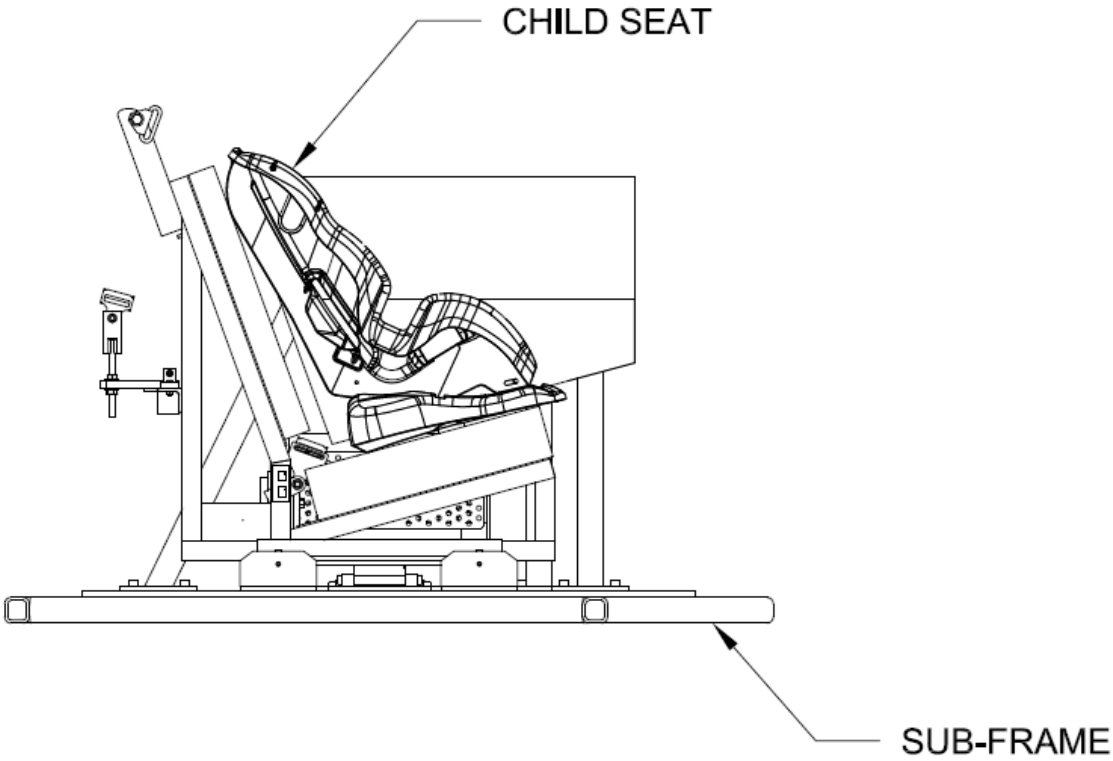

Figure 3 to § 571.213a. SISA Sliding Seat Acceleration Boundaries

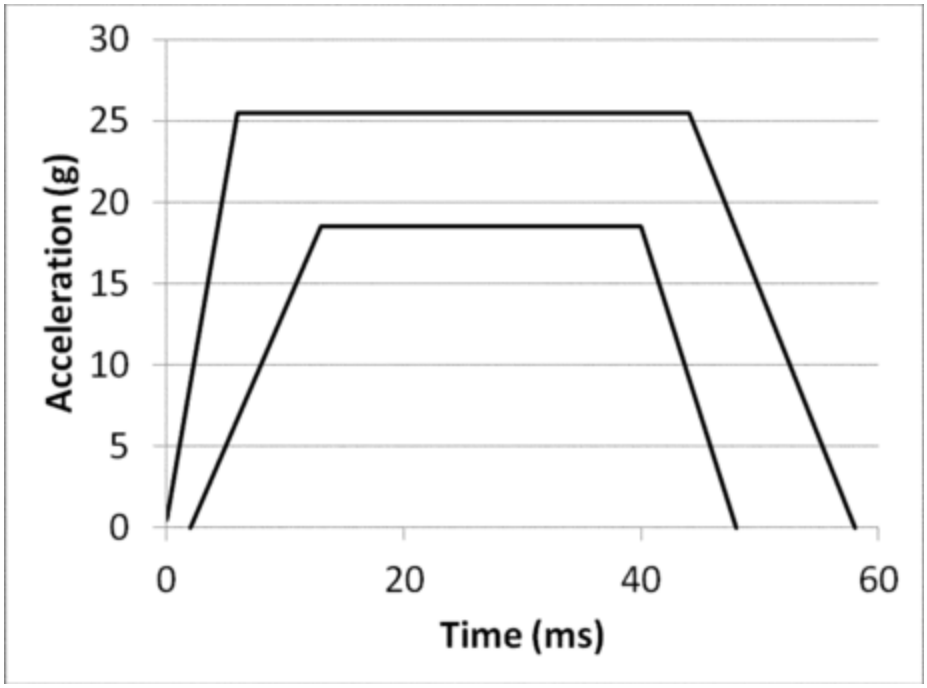

Upper Boundary		Lower Boundary	
Time (milliseconds)	Acceleration (g)	Time (milliseconds)	Acceleration (g)
0	0.5	2	0
6	25.5	13	18.5
44	25.5	40	18.5

58	0	48	0

Figure 4 to § 571.213a. Relative Velocity Corridor Plot and Table

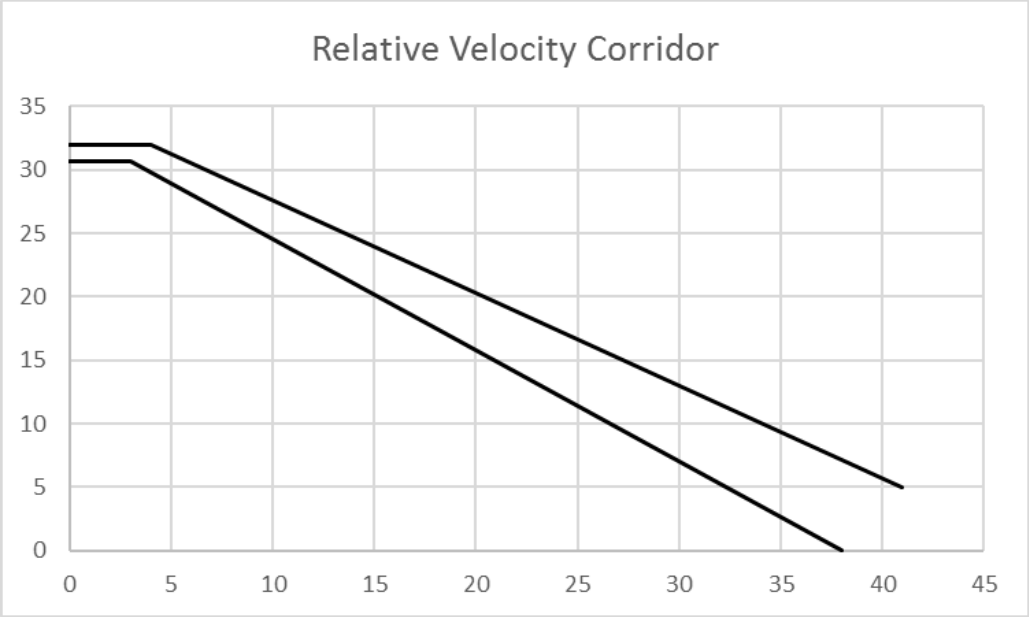

Lower Boundary		Upper Boundary	
Time (milliseconds)	Velocity (kph)	Time (milliseconds)	Velocity (kph)
0	30.66	0	31.94
3	30.66	4	31.94
38	0	41	5

Issued under authority delegated in 49 CFR 1.95 and 501.5.

_____
Steven S. Cliff
Administrator

Billing Code 4910-59-P

[FR Doc. 2022-13658 Filed: 6/29/2022 8:45 am; Publication Date: 6/30/2022]