This document is scheduled to be published in the
Federal Register on 01/11/2022 and available online at
federalregister.gov/d/2021-27004, and on **govinfo.gov**

DEPARTMENT OF ENERGY

10 CFR Parts 429, 430, and 431

EERE-2019-BT-TP-0032

RIN 1904-AE77

Energy Conservation Program: Test Procedure for Consumer Water Heaters and Residential-Duty Commercial Water Heaters

AGENCY: Office of Energy Efficiency and Renewable Energy, Department of Energy.

ACTION: Notice of proposed rulemaking and request for comment.

SUMMARY: The U.S. Department of Energy (DOE) proposes to amend the test procedure for consumer water heaters and residential-duty commercial water heaters to update the procedure to the latest versions of the industry standards that are incorporated by reference and to consider procedures that are included in a draft industry standard, which is not currently incorporated by reference. DOE also proposes to interpret the statutory definition of consumer water heater to cover larger capacity heat pump type units as commercial equipment and proposes several new definitions for water heaters that cannot be appropriately tested with the current DOE test procedure, along with test methods to test these products. DOE is seeking comment from interested parties on the proposals.

DATES: *Comments:* DOE will accept comments, data, and information regarding this notice of proposed rulemaking (NOPR) on or before **[INSERT DATE 60 DAYS AFTER DATE OF PUBLICATION IN THE *FEDERAL REGISTER*]**. See section V, "Public Participation," for details.

Meeting: DOE will hold a webinar on Tuesday, January 25, 2022, from 1:00 p.m. to 5:00 p.m. See section V, "Public Participation," for webinar registration information, participant instructions, and information about the capabilities available to webinar participants.

ADDRESSES: Interested persons are encouraged to submit comments using the Federal eRulemaking Portal at *www.regulations.gov*. Follow the instructions for submitting comments. Alternatively, interested persons may submit comments, identified by docket number EERE–2019–BT–TP–0032, by any of the following methods:

1. *Federal eRulemaking Portal*: *www.regulations.gov*. Follow the instructions for submitting comments.
2. *E-mail*: *to WaterHeaters2019TP0032@ee.doe.gov*. Include the docket number EERE–2019–BT–TP-0032 in the subject line of the message.

No telefacsimilies (faxes) will be accepted. For detailed instructions on submitting comments and additional information on this process, see section V of this document.

Although DOE has routinely accepted public comment submissions through a variety of mechanisms, including postal mail and hand delivery/courier, the Department has found it necessary to make temporary modifications to the comment submission process in light of the ongoing COVID-19 pandemic. DOE is currently suspending receipt of public comments via postal mail and hand delivery/courier, and instead, the Department is only accepting electronic submissions at this time. If a commenter finds that this change poses an undue hardship, please contact Appliance Standards Program staff at (202) 586-1445 to discuss the need for alternative arrangements. Once the

COVID-19 pandemic health emergency is resolved, DOE anticipates resuming all of its regular options for public comment submission, including postal mail and hand delivery/courier.

Docket: The docket, which includes *Federal Register* notices, public meeting attendee lists and transcripts (if a public meeting is held), comments, and other supporting documents/materials, is available for review at *www.regulations.gov*. All documents in the docket are listed in the *www.regulations.gov* index. However, some documents listed in the index, such as those containing information that is exempt from public disclosure, may not be publicly available.

The docket web page can be found at *www.regulations.gov/docket?D=EERE-2019-BT-TP-0032*. The docket web page contains instructions on how to access all documents, including public comments, in the docket. See section V for information on how to submit comments through *www.regulations.gov*.

FOR FURTHER INFORMATION CONTACT:

Ms. Julia Hegarty, U.S. Department of Energy, Office of Energy Efficiency and Renewable Energy, Building Technologies Office, EE-5B, 1000 Independence Avenue, SW., Washington, DC, 20585-0121. Telephone: (202) 597-6737. E-mail *ApplianceStandardsQuestions@ee.doe.gov*.

Ms. Kristin Koernig, U.S. Department of Energy, Office of the General Counsel, GC-33, 1000 Independence Avenue, SW., Washington, DC, 20585-0121. Telephone: (202) 586-3593. E-mail: *kristin.koernig@hq.doe.gov*.

For further information on how to submit a comment, review other public comments and the docket, or participate in a public meeting (if one is held), contact the Appliance and Equipment Standards Program staff at (202) 287-1445 or by e-mail: *ApplianceStandardsQuestions@ee.doe.gov*.

SUPPLEMENTARY INFORMATION:

DOE proposes to incorporate by reference the following industry standards into part 430:

American Society of Heating, Refrigerating, and Air-Conditioning Engineers (ASHRAE) Standard 41.1-2020, (ASHRAE 41.1-2020), "Standard Methods for Temperature Measurement," approved June 30, 2020.

American National Standards Institute (ANSI)/ASHRAE Standard 41.6-2014, (ASHRAE 41.6-2014), "Standard Method for Humidity Measurement," ANSI approved July 3, 2014.

Copies of ASHRAE 41.1-2020 and ASHRAE 41.6-2014 can be obtained from the American Society of Heating, Refrigerating, and Air-Conditioning Engineers, Inc., 1791 Tullie Circle, NE., Atlanta, GA 30329, (800) 527-4723 or (404) 636-8400, or online at: *www.ashrae.org*.

American Society for Testing and Materials International (ASTM) Standard D2156-09 (Reapproved 2018) (ASTM D2156-09 (RA 2018)), "Standard Test Method for Smoke Density in Flue Gases from Burning Distillate Fuels," reapproved October 1, 2018.

ASTM Standard E97-1987 (ASTM E97-1987 (W1991)), "Standard Test Methods for Directional Reflectance Factor, 45-Deg 0-Deg, of Opaque Specimens by Broad-Band Filter Reflectometry," approved January 1987, withdrawn 1991.

Copies of ASTM D2156-09 (RA 2018) and ASTM E97-1987 (W1991) can be obtained from the American Society for Testing and Materials International, 100 Barr Harbor Drive, P.O. Box C700, West Conshohocken, PA 19428-2959 or online at: *www.astm.org*.

See section IV.M of this document for a further discussion of these industry standards.

Table of Contents

I. Authority and Background
- A. Authority
- B. Background

II. Synopsis of the Notice of Proposed Rulemaking

III. Discussion
- A. Scope of Applicability
  - 1. Definitions
- B. Updates to Industry Standards
  - 1. ASHRAE 41.1
  - 2. ASHRAE 118.2
- C. Test Procedure Requirements
  - 1. Commercial Water Heater Draw Pattern
  - 2. Terminology
  - 3. Test Conditions
  - 4. Mixing Valve
  - 5. Mass Measurements
  - 6. Very Small Draw Pattern Flow Rate
  - 7. Low Temperature Water Heaters
  - 8. Heat Pump Water Heater Heaters
  - 9. Circulating Gas-Fired Water Heaters
  - 10. Solar Water Heaters
  - 11. Connected Water Heaters
  - 12. Drain Down Test Method
  - 13. Alternate Order 24-Hour Simulated-Use Test
  - 14. Untested Provisions
- D. Reporting
- E. Test Procedure Costs and Harmonization
  - 1. Test Procedure Costs and Impact

2. Harmonization with Industry Standards
F. Compliance Date and Waivers
IV. Procedural Issues and Regulatory Review
A. Review Under Executive Order 12866
B. Review Under the Regulatory Flexibility Act
1. Description of reasons why action is being considered
2. Objectives of, and legal basis for, rule
3. Description and estimate of small entities regulated
4. Description and estimate of compliance requirements
5. Duplication, Overlap, and Conflict with Other Rules and Regulations
6. Significant Alternatives to the Rule
C. Review Under the Paperwork Reduction Act of 1995
D. Review Under the National Environmental Policy Act of 1969
E. Review Under Executive Order 13132
F. Review Under Executive Order 12988
G. Review Under the Unfunded Mandates Reform Act of 1995
H. Review Under the Treasury and General Government Appropriations Act, 1999
I. Review Under Executive Order 12630
J. Review Under Treasury and General Government Appropriations Act, 2001
K. Review Under Executive Order 13211
L. Review Under Section 32 of the Federal Energy Administration Act of 1974
M. Description of Materials Incorporated by Reference
V. Public Participation
A. Participation in the Webinar
B. Submission of Comments
VI. Approval of the Office of the Secretary

I. Authority and Background

Consumer water heaters are included in the list of "covered products" for which DOE is authorized to establish and amend energy conservation standards and test procedures. (42 U.S.C. 6292(a)(4)) DOE's energy conservation standards and test procedure for consumer water heaters are currently prescribed at Title 10 of the Code of Federal Regulations (CFR), part 430 section 32(d), and 10 CFR part 430, subpart B, appendix E (appendix E). As discussed in this NOPR, residential-duty commercial water heaters, for which DOE is also authorized to establish and amend energy conservation standards and test procedures (42 U.S.C. 6311(1)(K)), must also be tested according to appendix E. 10 CFR 431.106(b)(1) (*See* 42 U.S.C. 6295(e)(5)(H)). DOE's energy conservation standards for residential-duty commercial water heaters are currently prescribed at 10 CFR 431.110(b)(1). The following sections discuss DOE's authority to

establish and amend test procedures for consumer water heaters and residential-duty commercial water heaters, as well as relevant background information regarding DOE's consideration of test procedures for these products and equipment.

A. Authority

The Energy Policy and Conservation Act, as amended (EPCA),[1] authorizes DOE to regulate the energy efficiency of a number of consumer products and certain industrial equipment. (42 U.S.C. 6291–6317, as codified) Title III, Part B[2] of EPCA established the Energy Conservation Program for Consumer Products Other Than Automobiles, which sets forth a variety of provisions designed to improve energy efficiency. (42 U.S.C. 6291-6309, as codified) These products include consumer water heaters, the subject of this document. (42 U.S.C. 6292(a)(4)) Title III, Part C[3] of EPCA, added by Pub. L. 95-619, Title IV, section 441(a), established the Energy Conservation Program for Certain Industrial Equipment, which again sets forth a variety of provisions designed to improve energy efficiency. (42 U.S.C. 6311-6317, as codified) This equipment includes commercial water heaters, which are also the subject of this document. (42 U.S.C. 6311(1)(k))

The energy conservation program under EPCA consists essentially of four parts: (1) testing, (2) labeling, (3) the establishment of Federal energy conservation standards, and (4) certification and enforcement procedures. Relevant provisions of EPCA specifically include definitions (42 U.S.C. 6291; 42 U.S.C. 6311), test procedures (42 U.S.C. 6293; 42 U.S.C. 6314), labeling provisions (42 U.S.C. 6294; 42 U.S.C. 6315),

---

[1] All references to EPCA in this document refer to the statute as amended through Energy Act of 2020, Pub. L. 116-260 (Dec. 27, 2020).
[2] For editorial reasons, upon codification in the U.S. Code, Part B was redesignated Part A.
[3] For editorial reasons, upon codification in the U.S. Code, Part C was redesignated Part A-1.

energy conservation standards (42 U.S.C. 6295; 42 U.S.C. 6313), and the authority to require information and reports from manufacturers (42 U.S.C. 6296; 42 U.S.C. 6316).

The Federal testing requirements consist of test procedures that manufacturers of covered products and commercial equipment must use as the basis for: (1) certifying to DOE that their products comply with the applicable energy conservation standards adopted pursuant to EPCA (42 U.S.C. 6295(s); 42 U.S.C. 6296; 42 U.S.C. 6316(a)-(b)), and (2) making representations about the efficiency of those products (42 U.S.C. 6293(c); 42 U.S.C. 6314(d)). Similarly, DOE must use these test procedures to determine whether the products comply with relevant standards promulgated under EPCA. (42 U.S.C. 6295(s))

Federal energy efficiency requirements for covered products and covered equipment established under EPCA generally supersede State laws and regulations concerning energy conservation testing, labeling, and standards. (42 U.S.C. 6297(a)-(c); 42 U.S.C. 6316(a)-(b)) However, DOE may grant waivers of Federal preemption in limited circumstances for particular State laws or regulations, in accordance with the procedures and other provisions of EPCA. (42 U.S.C. 6297(d); 42 U.S.C. 6316(a); 42 U.S.C. 6316(b)(2)(D))

Under 42 U.S.C. 6293, the statute sets forth the criteria and procedures DOE must follow when prescribing or amending test procedures for covered products. Specifically, EPCA requires that any test procedures prescribed or amended shall be reasonably designed to produce test results which measure energy efficiency, energy use, or estimated annual operating cost of a covered product during a representative average use cycle or period of use and shall not be unduly burdensome to conduct. (42 U.S.C.

6293(b)(3)) Under 42 U.S.C. 6314, the statute sets forth the criteria and procedures DOE must follow when prescribing or amending test procedures for covered equipment, reciting similar requirements at 42 U.S.C. 6314(a)(2).

In addition, the Energy Independence and Security Act of 2007 (EISA 2007) amended EPCA to require that DOE amend its test procedures for all covered consumer products to integrate measures of standby mode and off mode energy consumption. (42 U.S.C. 6295(gg)(2)(A)) Standby mode and off mode energy consumption must be incorporated into the overall energy efficiency, energy consumption, or other energy descriptor for each covered product unless the current test procedures already account for and incorporate standby and off mode energy consumption or such integration is technically infeasible. (42 U.S.C. 6295(gg)(2)(A)(i)-(ii)) If an integrated test procedure is technically infeasible, DOE must prescribe a separate standby mode and off mode energy use test procedure for the covered product, if technically feasible. (42 U.S.C. 6295(gg)(2)(A)(ii)) Any such amendment must consider the most current versions of the International Electrotechnical Commission (IEC) Standard 62301[4] and IEC Standard 62087,[5] as applicable. (42 U.S.C. 6295(gg)(2)(A))

The American Energy Manufacturing Technical Corrections Act (AEMTCA), Pub. L. 112–210, further amended EPCA to require that DOE establish a uniform efficiency descriptor and accompanying test methods to replace the energy factor (EF) metric for covered consumer water heaters and the thermal efficiency (TE) and standby loss (SL) metrics for commercial water-heating equipment[6] within one year of the

---

[4] IEC 62301, *Household electrical appliances—Measurement of standby power* (Edition 2.0, 2011-01).
[5] IEC 62087, *Methods of measurement for the power consumption of audio, video, and related equipment* (Edition 3.0, 2011-04).
[6] The initial thermal efficiency and standby loss test procedures for commercial water heating equipment (including residential-duty commercial water heaters) were added to EPCA by the Energy Policy Act of

enactment of AEMTCA. (42 U.S.C. 6295(e)(5)(B)-(C)) The uniform efficiency descriptor and accompanying test method were required to apply, to the maximum extent practicable, to all water-heating technologies in use at the time and to future water-heating technologies, but could exclude specific categories of covered water heaters that do not have residential uses, can be clearly described, and are effectively rated using the TE and SL descriptors. (42 U.S.C. 6295(e)(5)(F) and (H)) In addition, beginning one year after the date of publication of DOE's final rule establishing the uniform descriptor, the efficiency standards for covered water heaters were required to be denominated according to the uniform efficiency descriptor established in the final rule (42 U.S.C. 6295(e)(5)(D)); and for affected covered water heaters tested prior to the effective date of the test procedure final rule, DOE was required to develop a mathematical factor for converting the measurement of their energy efficiency from the EF, TE, and SL metrics to the new uniform energy descriptor. (42 U.S.C. 6295(e)(5)(E)(i)–(ii))

EPCA also requires that, at least once every 7 years, DOE evaluate test procedures for each type of covered product and covered equipment, including consumer water heaters and commercial water heaters that are the subject of this document, to determine whether amended test procedures would more accurately or fully comply with the requirements for the test procedures to not be unduly burdensome to conduct and be reasonably designed to produce test results that reflect energy efficiency, energy use, and

---

1992 (EPACT 1992), Pub. L. 102-486, and corresponded to those referenced in the ASHRAE and Illuminating Engineering Society of North America (IESNA) Standard 90.1-1989 (*i.e.,* ASHRAE Standard 90.1-1989). (42 U.S.C. 6314(a)(4)(A)) DOE subsequently updated the commercial water heating equipment test procedures on two separate occasions – once in a direct final rule published on October 21, 2004, and again in a final rule published on May 16, 2012. These rules incorporated by reference certain sections of the latest versions of ANSI Standard Z21.10.3, *Gas Water Heaters, Volume III, Storage Water Heaters with Input Ratings Above 75,000 Btu Per Hour, Circulating and Instantaneous*, available at the time (*i.e.*, ANSI Z21.10.3-1998 and ANSI Z21.10.3-2011, respectively). 69 FR 61974, 61983 (Oct. 21, 2004) and 77 FR 28928, 28996 (May 16, 2012).

estimated operating costs during a representative average use cycle (or additionally, period of use for consumer products). (42 U.S.C. 6293(b)(1)(A); 6314(a)(1))

If the Secretary determines, on her own behalf or in response to a petition by any interested person, that a test procedure should be prescribed or amended, the Secretary shall promptly publish in the *Federal Register* proposed test procedures and afford interested persons an opportunity to present oral and written data, views, and arguments with respect to such procedures. (42 U.S.C. 6293(b)(2); 42 U.S.C. 6314(b)) The comment period on a proposed rule to amend a test procedure shall be at least 60 days[7] and may not exceed 270 days. (42 U.S.C. 6293(b)(2)) In prescribing or amending a test procedure, the Secretary shall take into account such information as the Secretary determines relevant to such procedure, including technological developments relating to energy use or energy efficiency of the type (or class) of covered products involved. (42 U.S.C. 6293(b)(2)). If DOE determines that test procedure revisions are not appropriate, DOE must publish in the *Federal Register* its determination not to amend the test procedures. (42 U.S.C. 6293(b)(1)(A)(ii); 42 U.S.C. 6314(a)(1)(A)(ii)) DOE is publishing this NOPR in satisfaction of the 7-year review requirement specified in EPCA.

B. Background

As stated previously in this document, DOE's current test procedure for consumer water heaters appears at appendix E.

[7] For covered equipment, if the Secretary determines that a test procedure amendment is warranted, the Secretary must publish proposed test procedures in the *Federal Register*, and afford interested persons an opportunity (of not less than 45 days' duration) to present oral and written data, views, and arguments on the proposed test procedures. (42 U.S.C. 6314(b))

Pursuant to the requirements of the AEMTCA amendments to EPCA discussed previously, DOE updated the consumer water heater test procedure through a final rule published on July 11, 2014 (July 2014 final rule). 79 FR 40542. The July 2014 final rule: established a uniform energy descriptor (*i.e.*, uniform energy factor (UEF)) for all consumer water heaters and for commercial water heaters with consumer applications (*i.e.*, those commercial water heaters that met the newly established definition of a "residential-duty commercial water heater"); extended coverage to eliminate certain gaps in the previous version of the consumer water heater test procedure, including small-volume storage water heaters (*i.e.*, with storage volumes between 2 and 20 gallons), large volume water heaters (*i.e.*, greater than 100 gallons for gas-fired and oil-fired storage water heaters and greater than 120 gallons for electric storage water heaters), and electric instantaneous water heaters; updated the draw pattern from a single 24-hour simulated-use test draw pattern to include several different draw patterns that vary depending on equipment capacity as measured by the first-hour rating (FHR) or maximum gallons per minute (Max GPM) test; and updated the outlet water temperature test condition requirement. 79 FR 40542, 40545, 40548, 40551-40554 (July 11, 2014).

As indicated, the uniform energy descriptor and the consumer water heater test procedure apply to "residential-duty commercial water heaters," which were initially defined in the July 2014 final rule and include commercial water heaters with consumer applications. *Id.* at 79 FR 40586; 10 CFR 431.106(b)(1) and 10 CFR 431.110(b). DOE later amended the definition of a "residential-duty commercial water heater" in a final rule published on November 10, 2016 (November 2016 final rule), to define such equipment as any gas-fired storage, oil-fired storage, or electric instantaneous commercial water heater that meets the following conditions: (1) For models requiring electricity, uses single-phase external power supply; (2) Is not designed to provide outlet

hot water at temperatures greater than 180 °F; and (3) Does not meet any of the following criteria:

Water heater type	**Indicator of non-residential application**
Gas-fired Storage	Rated input >105 kBtu/h; Rated storage volume >120 gallons.
Oil-fired Storage	Rated input >140 kBtu/h; Rated storage volume >120 gallons.
Electric Instantaneous	Rated input >58.6 kW; Rated storage volume >2 gallons.

81 FR 79261, 79321-79322; 10 CFR 431.102.

In the November 2016 final rule DOE also, in relevant part, revised some of the definitions for consumer water heater product classes and removed others. Definitions for both "electric heat pump water heater" and "gas-fired heat pump water heater" were removed, and revisions were made to the definitions of "electric storage water heater" and "gas-fired storage water heater," which made each sufficiently broad to cover electric heat pump water heaters and gas-fired heat pump water heaters, respectively. 81 FR 79261, 79320-79321 (Nov. 10, 2016). The November 2016 final rule also amended the definitions of "electric instantaneous water heater", "gas-fired instantaneous water heater", "oil-fired instantaneous water heater", and "oil-fired storage water heater." *Id.*

On December 29, 2016, DOE published a final rule (December 2016 final rule) that denominated the efficiency standards for consumer water heaters and residential-duty commercial water heaters in terms of the uniform efficiency descriptor (*i.e.*, the UEF metric) and established mathematical conversion factors to translate the EF, TE, and SL metrics to the UEF metric. 81 FR 96204. The published conversion factors were applicable for converting test results for a period of one year after the publication of the December 2016 final rule as required by EPCA, as amended by AEMTCA. 42 U.S.C. 6295(e)(5)(E)(v)(II); 81 FR 96204, 96208 (Dec. 29, 2016). The conversion factors translating previously tested EF, TE, and SL values to converted UEF values were

removed from 10 CFR 429.17 on December 29, 2017, at which time all rated UEF values were to be based on actual testing to the test procedure published in the July 2014 final rule (*i.e.,* to the UEF test procedure). 81 FR 96204, 96235.

Most recently, on April 16, 2020, DOE published in the *Federal Register* a request for information (April 2020 RFI) seeking comments on the existing DOE test procedure for consumer water heaters and residential-duty commercial water heaters. 85 FR 21104. The April 2020 RFI discussed a draft version of the ANSI/ASHRAE Standard 118.2, which was published in March 2019 (March 2019 ASHRAE Draft 118.2), which is very similar to the existing DOE test procedure of consumer water heaters and residential-duty commercial water heaters. 85 FR 21104, 21108-21110 (April 16, 2020).

In the April 2020 RFI, DOE requested comments, information, and data about a number of issues, including: (1) differences between the March 2019 ASHRAE Draft 118.2 and the existing DOE test procedure; (2) test tolerances for supply water temperature, ambient temperature, relative humidity, voltage, and gas pressure; (3) the location of the instrumentation that measures water volume or mass; and (4) how to test certain types of consumer water heaters that cannot be easily tested to the existing DOE test procedure (*i.e.*, recirculating gas-fired instantaneous water heaters, water heaters that cannot deliver water at 125 °F ±5 °F, and water heaters with storage volumes greater than 2 gallons that cannot have their internal tank temperatures measured). *Id.* at 85 FR 21109-21114.

DOE received comments in response to the April 2020 RFI from the interested parties listed in Table I.1.

Table I.1 List of Commenters with Written Submissions in Response to the April 2020 RFI

Commenter(s)	Reference in this NOPR	Commenter Type*
A. O. Smith Corporation	A.O. SMITH	M
Air-Conditioning, Heating, and Refrigeration Institute	AHRI	TA
American Public Gas Association	APGA	TA
Appliance Standards Awareness Project, American Council for an Energy-Efficient Economy, Consumer Federation of America, National Consumer Law Center, Natural Resources Defense Council, and Northeast Energy Efficiency Partnerships	Joint Advocates	AG
Bradford White Corporation	BWC	M
California Energy Commission	CEC	State
CSA Group	CSA	TL
Edison Electric Institute	EEI	U
Keltech Inc	Keltech	M
M C	M C	I
Northwest Energy Efficiency Alliance	NEEA	AG
Pacific Gas and Electric Company, San Diego Gas and Electric, and Southern California Edison	CA IOUs	U
Rheem Manufacturing Company	Rheem	M
Rinnai America Corporation	Rinnai	M
Stone Mountain Technologies, Inc.	SMTI	M

* AG: Advocacy Group; State: Government Organization; I: Individual; M: Manufacturer; TA: Trade Association; TL: Test Laboratory; U: Utility or Utility Trade Association.

A parenthetical reference at the end of a comment quotation or paraphrase provides the location of the item in the public record.[8]

II. Synopsis of the Notice of Proposed Rulemaking

In this NOPR, DOE proposes to update appendix E, and related sections of the CFR, as follows:

[8] The parenthetical reference provides a reference for information located in the docket of DOE's rulemaking to develop test procedures for consumer water heaters and residential-duty commercial water heaters. (Docket No. EERE-2019-BT-TP-0032, which is maintained at: *www.regulations.*gov/*docket/EERE–2019–BT–TP–0032*). The references are arranged as follows: (commenter name, comment docket ID number, page of that document).

1) Incorporate by reference current versions of industry standards referenced by the current and proposed DOE test procedures: ASHRAE 41.1, ASHRAE 41.6, the pending update to ASHRAE 118.2 (contingent on it being substantively the same as the current draft under review), ASTM D2156, and ASTM E97.

2) Add definitions for “circulating water heater”, “low temperature water heater”, and “tabletop water heater”.

3) Specify how a mixing valve should be installed when the water heater is designed to operate with one.

4) Modify flow rate requirements during the FHR test for water heaters with a rated storage volume less than 20 gallons.

5) Modify timing of the first measurement in each draw of the 24-hour simulated-use test.

6) Clarify the determination of the first recovery period.

7) Clarify the mass of water to be used to calculate recovery efficiency.

8) Modify the terminology throughout appendix E to explicitly state “non-flow activated” and “flow-activated” water heater, where appropriate.

9) Clarify the descriptions of defined measured values for the standby period measurements.

10) Modify the test condition specifications and tolerances, including electric supply voltage tolerance, ambient temperature, ambient dry bulb temperature, ambient relative humidity, standard temperature and pressure definition, gas supply pressure, and manifold pressure.

11) Add provisions to address gas-fired water heaters with measured fuel input rates that deviate from the certified input rate.

12) Clarify provisions for calculating the volume or mass delivered.

13) Add specifications for testing for the newly defined "low temperature water heaters".

14) Clarify testing requirements for the heat pump part of a split-system heat pump water heater.

15) Define the use of a separate unfired hot water storage tank for testing water heaters designed to operate with a separately sold hot water storage tank.

16) Clarify that any connection to an external network or control be disconnected during testing.

17) Add procedures for estimating internal stored water temperature for water heater designs in which the internal tank temperature cannot be directly measured.

18) Modify the provisions for untested water heater basic models within 10 CFR 429.70(g) to include electric instantaneous water heaters.

DOE's proposed actions are summarized in Table II.1 and compared to the current test procedure; the reason for the proposed change is also listed.

Table II.1 Summary of Changes in Proposed Test Procedure Relative to Current Test Procedure

Current DOE Test Procedure	Proposed Test Procedure	Attribution
References the 1986 (Reaffirmed 2006) version of ASHRAE 41.1 for methods for temperature measurement.	References the updated 2020 version of ASHRAE 41.1.	Industry TP Update to ASHRAE 41.1.
The 1982 version of ASHRAE 41.6 for methods for humidity measurement is referenced within the 1986 version of ASHRAE 41.1.	References the 2014 version of ASHRAE 41.6, which is referenced by ASHRAE 41.1-2020.	Industry TP Update to ASHRAE 41.6.
References the 2009 version of ASTM D2156 for testing smoke density in flue gases from burning distillate fuels.	References the version of ASTM D2156 that was reaffirmed in 2018.	Industry TP Update to ASTM D2156.
The 1987 version of ASTM E97 for testing directional reflectance factor, 45-deg 0-deg, of opaque specimens by broad-band filter reflectometry is referenced within ASTM D2156-09.	References the 1987 version of ASTM E97, which is referenced by ASTM D2156-09 (2018).	Industry TP Update to ASTM E97.
Does not define a "circulating water heater" as used in 10 CFR 430.2.	Adds a definition for "circulating water heater" to 10 CFR 430.2.	To improve the representativeness of the test procedure.
Does not define a "tabletop water heater" as used as a product class distinction at 10 CFR 430.32(d).	Adds a definition for "tabletop water heater" to 10 CFR 430.2.	Reinstate definition inadvertently removed by previous final rule.
Does not address how to configure a water heater for test when a mixing valve is required for proper operation.	Specifies how a mixing valve should be installed when the water heater is designed to operate with one.	To improve the repeatability of the test procedure.

Requires the flow rate during the FHR test to be 1.0 ±0.25 gpm (3.8 ±0.95 L/min) for water heaters with a rated storage volume less than 20 gallons.	Requires the flow rate during the FHR test to be 1.5 ±0.25 gpm (3.8 ±0.95 L/min) for water heaters with a rated storage volume less than 20 gallons.	To improve the representativeness of the test procedure and to align with the industry test procedure ASHRAE 118.2.
Does not address the situation in which the first recovery ends during a draw when testing to the 24-hour simulated-use test.	Clarifies that the first recovery period will extend to the end of the draw in which the first recovery ended, and that if a second recovery initiates prior to the end of the draw, that the second recovery is part of the first recovery period as well.	To improve the repeatability of the test procedure.
The recovery efficiency equation for storage-type water heaters refers to the mass of water removed from the start of the test to the end of the first recovery period.	Clarifies that, for the calculation of recovery efficiency, the mass of water removed during the first recovery period includes water removed during all draws from the start of the test until the end of the first recovery period.	To improve the repeatability of the test procedure.
Appendix E uses the phrases "storage-type" and "instantaneous-type" to refer to "non-flow activated" and "flow-activated" water heaters, respectively.	Uses the terms "non-flow activated" and "flow-activated" water heater, where appropriate.	Clarification.
The descriptions for $Q_{su,0}$, $Q_{su,f}$, $\overline{T}_{su,0}$, $\overline{T}_{su,f}$, τstby,1, $\overline{T}_{t,stby,1}$, and $\overline{T}_{a,stby,1}$ only address when the standby period occurs between draw clusters 1 and 2.	The descriptions for $Q_{su,0}$, $Q_{su,f}$, $\overline{T}_{su,0}$, $\overline{T}_{su,f}$, τstby,1, $\overline{T}_{t,stby,1}$, and $\overline{T}_{a,stby,1}$ are generalized to refer to the section where the standby period is determined.	Clarification.
Specifies that the first required measurement for each draw of the 24-hour simulated-use test is 5 seconds after the draw is initiated.	Specifies that the first required measurement for each draw of the 24-hour simulated-use test is 15 seconds after the draw is initiated.	Reduce burden.
Requires the electric supply voltage to be within ±1 percent of the rated voltage for the entire test.	Requires the electric supply voltage to be within ±2 percent of the rated voltage beginning 5 seconds after the start of a recovery and ending 5 seconds before the end of a recovery.	Reduce burden.
Requires maintaining ambient temperature for non-heat pump water heaters within a range of 67.5 °F ±2.5 °F.	Requires maintaining the ambient temperature for non-heat pump water heaters within a range of 67.5 °F ±5 °F, and with an average of 67.5 °F ±2.5 °F.	Reduce burden.
Requires maintaining the dry bulb temperature for heat pump water heaters within a range of 67.5 °F ±1 °F.	Requires maintaining the dry bulb temperature for heat pump water heaters within a range of 67.5 °F ±5 °F, and with an average of 67.5 °F ±1 °F during recoveries and an average of 67.5 °F ±2.5 °F when not recovering.	Reduce burden.
Requires maintaining the relative humidity for heat pump water heaters within a range of 50 percent ±2 percent.	Requires maintaining the relative humidity for heat pump water heaters within a range of 50 percent ±5 percent, and at an average of 50 percent ±2 percent during recoveries.	Reduce burden.
Requires that the heating value be corrected to a standard temperature and pressure, but does not state what temperature and pressure is standard or how to correct the heating value to the standard temperature and pressure.	States that the standard temperature is 60 °F (15.6 °C) and the standard pressure is 30 inches of mercury column (101.6 kPa). Provides a method for converting heating value from the measured to the standard conditions.	To improve the repeatability of the test procedure.
Requires that the manifold pressure be within ±10 percent of the manufacturer recommended value.	Clarifies that the manifold pressure tolerance applies only to water heaters with a pressure regulator that can be adjusted. Requires that the manifold pressure be within the greater of ±10 percent of the manufacturer recommended value or ±0.2 inches water column.	Reduce burden.

Does not specify the input rate at which the gas supply pressure tolerance is determined.	Specifies that the gas supply pressure tolerance is to be maintained when operating at the maximum input rate.	Clarification.
Does not contain procedures for modifying the orifice of a water heater that is not operating at the manufacturer specified input rate.	Adds provisions regarding the modification of the orifice.	To improve the repeatability of the test procedure.
Does not specify how to calculate the mass removed from the water heater when mass is calculated indirectly using density and volume measurements.	Specifies how to calculate the mass of water indirectly using density and volume measurements.	To improve the repeatability of the test procedure.
Does not accommodate testing of "low temperature water heaters" in appendix E.	Adds a definition of "low temperature water heater" in 10 CFR 430.2 and requires low temperature water heaters to be tested to their maximum possible delivery temperature in appendix E.	To improve the representativeness and repeatability of the test procedure.
Does not explicitly define the test conditions required for each part of a split-system heat pump water heater.	Explicitly states that the heat pump part of a split-system heat pump water heater is tested at the dry bulb temperature and relative humidity conditions required for heat pump water heaters, and that the storage tank is tested at the ambient temperature and relative humidity conditions required for non-heat pump water heaters.	To improve the repeatability of the test procedure.
Does not accommodate testing of water heaters that require a separately-sold hot water storage tank to properly operate.	Requires water heaters designed to operate with a separately-sold hot water storage tank to use an 80-gallon unfired hot water storage tank for testing.	To improve the representativeness of the test procedure.
Does not address water heaters with network connection capabilities.	Explicitly states that any connection to an external network or control be disconnected during testing.	To improve the repeatability of the test procedure.
Does not accommodate certain water heaters for which the mean tank temperature cannot be directly measured.	Adds a "drain down" procedure to estimate the mean tank temperature for certain water heaters for which the mean tank temperature cannot be directly measured.	To improve the representativeness of the test procedure.
10 CFR 429.70(g) does not allow untested electric instantaneous water heaters to be certified, but does allow untested electric storage water heaters to be certified.	Extends the untested provisions within 10 CFR 429.70(g) to include electric instantaneous water heaters.	Reduce burden.

.

Additionally, DOE proposes to interpret the statutory definition of consumer water heater to exclude certain larger capacity heat pump type units and that such units would be covered as commercial equipment.

DOE has tentatively determined that the proposed amendments described in section III of this NOPR would not significantly affect the measured efficiency of consumer and residential-duty commercial water heaters. Discussion of DOE's proposed actions are addressed in detail in section III of this NOPR.

III. Discussion

A. Scope of Applicability

This document covers those products that meet the definition of consumer "water heater," as defined in the statute at 42 U.S.C. 6291(27), as codified at 10 CFR 430.2. This document also covers commercial water heating equipment with residential applications, *i.e.*, "residential-duty commercial water heater" (10 CFR 431.102).

1. Definitions

In the context of covered consumer products, EPCA defines "water heater" as a product which utilizes oil, gas, or electricity to heat potable water for use outside the heater upon demand, including—

(a) Storage type units which heat and store water at a thermostatically controlled temperature, including gas storage water heaters with an input of 75,000 Btu per hour or less, oil storage water heaters with an input of 105,000 Btu per hour or less, and electric storage water heaters with an input of 12 kilowatts or less;

(b) Instantaneous type units which heat water but contain no more than one gallon of water per 4,000 Btu per hour of input, including gas instantaneous water heaters with an input of 200,000 Btu per hour or less, oil instantaneous water heaters with an input of 210,000 Btu per hour or less, and electric instantaneous water heaters with an input of 12 kilowatts or less; and

(c) Heat pump type units, with a maximum current rating of 24 amperes at a voltage no greater than 250 volts, which are products designed to transfer thermal energy

from one temperature level to a higher temperature level for the purpose of heating water, including all ancillary equipment such as fans, storage tanks, pumps, or controls necessary for the device to perform its function.

(42 U.S.C. 6291(27); 10 CFR 430.2)

In addition, at 10 CFR 430.2, DOE defines several specific categories of consumer water heaters, as follows:

(1) "Electric instantaneous water heater" means a water heater that uses electricity as the energy source, has a nameplate input rating of 12 kW or less, and contains no more than one gallon of water per 4,000 Btu per hour of input.

(2) "Electric storage water heater" means a water heater that uses electricity as the energy source, has a nameplate input rating of 12 kW or less, and contains more than one gallon of water per 4,000 Btu per hour of input.

(3) "Gas-fired instantaneous water heater" means a water heater that uses gas as the main energy source, has a nameplate input rating less than 200,000 Btu/h, and contains no more than one gallon of water per 4,000 Btu per hour of input.

(4) "Gas-fired storage water heater" means a water heater that uses gas as the main energy source, has a nameplate input rating of 75,000 Btu/h or less, and contains more than one gallon of water per 4,000 Btu per hour of input.

(5) "Grid-enabled water heater" means an electric resistance water heater that—

(a) Has a rated storage tank volume of more than 75 gallons;

(b) Is manufactured on or after April 16, 2015;

(c) Is equipped at the point of manufacture with an activation lock and;

(d) Bears a permanent label applied by the manufacturer that—

(i) Is made of material not adversely affected by water;

(ii) Is attached by means of non-water-soluble adhesive; and

(iii) Advises purchasers and end-users of the intended and appropriate use of the product with the following notice printed in 16.5 point Arial Narrow Bold font: "IMPORTANT INFORMATION: This water heater is intended only for use as part of an electric thermal storage or demand response program. It will not provide adequate hot water unless enrolled in such a program and activated by your utility company or another program operator. Confirm the availability of a program in your local area before purchasing or installing this product."

(6) "Oil-fired instantaneous water heater" means a water heater that uses oil as the main energy source, has a nameplate input rating of 210,000 Btu/h or less, and contains no more than one gallon of water per 4,000 Btu per hour of input.

(7) "Oil-fired storage water heater" means a water heater that uses oil as the main energy source, has a nameplate input rating of 105,000 Btu/h or less, and contains more than one gallon of water per 4,000 Btu per hour of input.

The definition for "grid-enabled water heater" includes the term "activation lock," which is defined to mean a control mechanism (either by a physical device directly on the water heater or a control system integrated into the water heater) that is locked by default and contains a physical, software, or digital communication that must be activated with

an activation key to enable the product to operate at its designed specifications and capabilities and without which the activation of the product will provide not greater than 50 percent of the rated first-hour delivery of hot water certified by the manufacturer. 10 CFR 430.2. As specified in this definition, the control mechanism must be physically incorporated into the water heater or, if a control system, integrated into the water heater to qualify as an activation lock. DOE is aware of certain state programs that encourage water heaters to be equipped with communication ports that allow for demand-response communication between the water heater and the utility.[9] DOE notes that presence of such a communication port, in and of itself, would not qualify as an activation lock for the purpose of classifying a water heater as a grid-enabled water heater.

In the April 2020 RFI, DOE requested comment on the definitions currently applicable to consumer water heaters. 85 FR 21104, 21108 (April 16, 2020). Sections III.A.1.a through III.A.1.e address specific issues either requested by DOE or submitted by commenters.

a. Electric Heat Pump Storage Water Heater

[9] On May 7, 2019, the State of Washington signed House Bill 1444, which amended the Revised Code of Washington (RCW) (*i.e.,* the statutory code in the State of Washington), Title 19, Chapter 19.260 (RCW 19.260). On January 6, 2020, the State of Washington amended the Washington Administrative Code (WAC) (*i.e.,* the regulatory code in the State of Washington), Title 194, Chapter 194-24 (WAC 194-24) (Washington January 2020 Amendment) to align with RCW 19.260. Similarly, the State of Oregon published a final rule (Oregon August 2020 final rule) on August 8, 2020, which amended the Oregon Administrative Rules (OAR), Chapter 330, Division 92 (OAR-330-092). The Washington House Bill 1444 and the Oregon August 2020 final rule established a definition for electric storage water heater (RCW 19.260.020(14); OAR-330-092-0010(10)), an effective date of January 1, 2021 in Washington and January 1, 2022 in Oregon (RCW 19.260.080(1); OAR-330-092-0015(17)), a requirement that electric storage water heaters must have a modular demand response communications port compliant with the March 2018 version of the ANSI/CTA-2045-A communication interface standard, or a standard determined to be equivalent (RCW 19.260.080(1)(a)-(b); OAR-330-092-0020(17)), and, in Oregon, must bear a label or marking on the products stating either "DR-ready: CTA-2045-A" or "DR-ready: CTA-2045-A and [equivalent DR system protocol]" (OAR-330-092-0045(17)).

In the April 2020 RFI, DOE requested feedback on the need for creating a separate definition for "electric heat pump storage water heater," similar to the definition in the March 2019 ASHRAE Draft 118.2, or whether the current DOE definitions in 10 CFR 430.2 for "electric storage water heater" and "water heater," which include "heat pump type units," would adequately cover such products for the purpose of performing the DOE test procedure. 85 FR 21104, 21110 (April 16, 2020). Rheem supported the creation of a separate definition for electric heat pump storage water heaters, specifically to clarify power rating limits and to include different design types. (Rheem, No. 14 at p. 3) Rinnai supported the inclusion of a definition for electric heat pump water heaters but not the creation of a separate product category. (Rinnai, No. 13 at p. 4) EEI stated that DOE should adopt the March 2019 ASHRAE Draft 118.2 definition for electric heat pump storage water heaters. (EEI, No. 8 at p. 3) On the other hand, BWC stated that the definition for "electric heat pump water heater" is adequate at this time. (BWC, No. 12 at p. 2) A.O. Smith stated that the introduction of the electric heat pump water heater definition from the March 2019 ASHRAE Draft 118.2 is unnecessary and will cause confusion due to the difference in scope, and that DOE's definitions for heat pump type units with additional clarification regarding maximum amperage and input power would be sufficient. (A.O. Smith, No. 20 at p. 2) AHRI stated that DOE should carefully review the entire heat pump water heater market, consider how each of the various designs should be characterized, and consider changes to the definitions, as necessary. (AHRI, No. 17 at p. 4) NEEA stated that no change to the definition is needed yet as the "heat pump type units" definition is adequate as written. (NEEA, No. 21 at p. 6) NEEA also requested that DOE clarify the boundary between residential and commercial heat pump water heaters for testing purposes and further stated that residential is implied to

include input rates lower than 6 kW,[10] whereas commercial is implied to include input rates greater than 12 kW, such that the 6-12 kW range is ambiguous. (*Id.* at pp. 1-3)

DOE's consideration of the March 2019 ASHRAE Draft 118.2 "electric heat pump storage water heater" definition, the comments received in response to the April 2020 RFI, and a review of the market, lead DOE to revisit its prior application of the water heater definition in the context of heat pump type water heaters. DOE is re-evaluating these terms with additional consideration of the distinction between heat pump water heater consumer products and commercial products. More specifically, DOE proposes to clarify the application of the "heat pump type" provision in the EPCA definition of "water heater." DOE proposes that the "heat pump type" provision specifies the criteria to distinguish consumer water heaters that incorporate heat pumps from commercial water heaters that incorporate heat pumps.

As noted, EPCA defines water heater to include "(A) storage type units which heat and store water at a thermostatically controlled temperature, including … electric storage water heaters with an input of 12 kilowatts or less; (B) instantaneous type units which heat water but contain no more than one gallon of water per 4,000 Btu per hour of input, including … electric instantaneous water heaters with an input of 12 kilowatts or less; and (C) heat pump type units, with a maximum current rating of 24 amperes at a voltage no greater than 250 volts, which are products designed to transfer thermal energy from one temperature level to a higher temperature level for the purpose of heating water, including all ancillary equipment such as fans, storage tanks, pumps, or controls necessary for the device to perform its function." (42 U.S.C. 6291(27))

---

[10] Power equals amperage times voltage, so the definition of consumer heat pump type unit corresponds to a maximum power rating of 6,000 W, or 6 kW (24 A times 250 V equals 6,000 W).

"Storage type units" and "instantaneous type units" are not exclusive of "heat pump type units." Based on the "water heater" definition, an electric heat pump type unit could be covered under the water heater definition's description of storage type units (if it heats and stores water at a thermostatically controlled temperature with an input of 12 kilowatts or less) or instantaneous type unit (if it heats water and contains no more than one gallon of water per 4,000 Btu per hour of input and has an input of 12 kilowatts or less). EPCA is not explicit as to whether heat pump type units are considered a subcategory of storage type units and instantaneous type units.

The November 2016 final rule treated heat pump type units as a subcategory of the other two types of units listed in the definition of water heater. Specifically, DOE stated in the November 2016 final rule that a heat pump water heater with a total rated input of less than 12 kW would be a consumer water heater, as EPCA classifies electric water heaters with less than 12 kW rated electrical input as consumer water heaters. 81 FR 79261, 79301-79302 (Nov. 10, 2016). However, upon a review of EPCA and the water heater market, DOE has tentatively determined that the interpretation presented in the November 2016 final rule is not the best reading of EPCA.

The structure of the statutory definition of "water heater" in the Energy Conservation Program for Consumer Products in Part A of EPCA, lists each type of water heater at equal subparagraph designations. Therefore, when defining "water heater" for the purpose of determining whether a water heater is a consumer water heater, the energy use criteria specified for heat pump type units[11] is to be applied separately and

[11] For heat pump type units EPCA specifies a maximum current rating of 24 amperes at a voltage no greater than 250 volts. (42 U.S.C. 6291(27)(C))

distinctly from the criteria specified for the broader categorizations of storage type units[12] and instantaneous type units.[13]

This separate consideration of heat pump type units when defining the scope of the consumer water heater definition is further supported by considering the output capacities associated with the input limits specified for each type of unit. The electrical requirements for heat pump type water heaters (*i.e.,* less than or equal to 24 amperes (A) at 250 volts (V) or less) align with common electrical requirements for a residential electrical circuit.[14] EPCA's energy use criteria for heat pump type units corresponds to an input rate of 6 kW.[15] Whereas, DOE's interpretation in the November 2016 final rule additionally applies the 12 kW input rate limit to heat pump type units. A heat pump type unit with an input rate of 12 kW would have a heating capacity (*i.e.*, output capacity) of approximately 42 kW, which is 3.6 times the output heating capacity provided by the largest possible consumer electric storage type water heater (*i.e.,* 11.8 kW).[16] While a heat pump type unit with a 12 kW input capacity could theoretically be designed and

---

[12] For storage type units EPCA specifies gas storage water heaters with an input of 75,000 Btu per hour or less, oil storage water heaters with an input of 105,000 Btu per hour or less, and electric storage water heaters with an input of 12 kilowatts or less. (42 U.S.C. 6291(27)(A))

[13] For instantaneous type units EPCA specifies gas instantaneous water heaters with an input of 200,000 Btu per hour or less, oil instantaneous water heaters with an input of 210,000 Btu per hour or less, and electric instantaneous water heaters with an input of 12 kilowatts or less. (42 U.S.C. 6291(27)(B))

[14] In a safely designed home electrical circuit, a circuit breaker should only service outlets and/or devices that add up to 80 percent of the maximum current rating for the circuit breaker (*i.e.,* a 30 A circuit breaker should only service up to 24 A across all outlets and/or devices connected to that circuit breaker). Further, large appliances, such as water heaters, if installed on a dedicated circuit, should not exceed 80 percent of the circuit rating. See section 550.12(D) of the 2019 California Electrical Code: *www.nfpa.org/codes-and-standards/all-codes-and-standards/codes-and-standards/free-access?mode=view*.

[15] Power (in watts) is calculated as current (*i.e.* amperage) multiplied by voltage. The EPCA criteria of 24 A and 250 V correspond to a power of 6,000 W (*i.e.*, 24 × 250 = 6,000), or 6 kW.

[16] A 12-kW electric resistance water heater with an assumed recovery efficiency of 98 percent would have an output heating capacity of 11.8 kW (*i.e.*, 12 kW × 0.98 = 11.8 kW). Whereas, an electric heat pump type water heater with a 12 kW input capacity, with an assumed recovery efficiency of 350 percent, would have an output heating capacity of 42 kW (*i.e.*, 12 kW × 3.5 = 42 kW), which is 3.6 times greater than the 11.8 kW output heating capacity of an electric resistance water heater with equivalent input capacity.

installed in a residential application, a water heating capacity (*i.e*. output capacity) of 42 kW would far exceed the water heating demand of any residential installation.

This tentative interpretation is supported by the current market. DOE reviewed manufacturers' product literature and found no electric heat pump water heaters marketed towards residential use that were designed to operate at greater than 24 A at 250 V.

This proposed interpretation of the "heat pump type" provision would define the scope of "water heater" for the purpose of Part A of EPCA. The interpretation would not be applicable in the context of determining product classes for water heaters. Any such consideration of product classes would be governed by 42 U.S.C. 6295(q). As stated previously, "storage type units" and "instantaneous type units" are not exclusive of "heat pump type units." The criteria established in the statutory definition of water heater for each of these types of units in the definition of "water heater" excludes units with capacities that would be more appropriately addressed as commercial water heaters.

When considering the unit types included in the water heater definition (*i.e.*, "storage type," "instantaneous type," and "heat pump type") as separate and distinct elements, the statutory definition of consumer water heater includes only those heat pump type units that have a maximum current rating of 24 A at a voltage no greater than 250 V. Heat pump type water heaters with an input capacity greater than the 24 A at 250 V do not meet the EPCA definition of a covered water heater. Instead, such units would be commercial water heaters, *i.e.*, if a heat pump type water heater has either an amperage greater than 24 A or a voltage greater than 250 V, under the definition it would be a commercial water heater.

EPCA defines covered equipment as certain types of industrial equipment, including storage water heaters and instantaneous water heaters. (42 U.S.C. 6311(1)(K)) EPCA defines "industrial equipment," in relevant part, as "any article of equipment […] which is not a "covered product" as defined in 42 U.S.C. 6291(a)(2). (42 U.S.C. 6311(2)(A)) In the context of covered equipment, EPCA defines "storage water heater" as a water heater that heats and stores water within the appliance at a thermostatically controlled temperature for delivery on demand. Such term does not include units with an input rating of 4,000 Btu per hour or more per gallon of stored water. (42 U.S.C. 6311(12)(A)) The term "instantaneous water heater" is defined in the context of covered equipment as a water heater that has an input rating of at least 4,000 Btu per hour per gallon of stored water. (42 U.S.C. 6311(12)(B)) Under these EPCA definitions, a heat pump type water heater that was not defined as a consumer water heater would be either a commercial storage water heater or a commercial instantaneous water heater, depending on the input rating.

DOE has tentatively determined that heat pump water heaters, which operate with a maximum current rating greater than 24 A or at a voltage greater than 250 V, are more appropriately covered as commercial water heaters than consumer water heaters.

As discussed in the November 2016 final rule, electric heat pump water heaters with greater than 24 A at 250 V and a total input rate less than or equal to 12kW would be covered by the energy conservation standards for consumer electric storage water heaters. *See* 81 FR 79261, 79301-79302. (Nov. 10, 2016). These standards for consumer electric storage water heaters effectively require electric resistance technology at less

than or equal to 55 gallons of rated storage volume or baseline[17] heat pump technology at greater than 55 gallons of rated storage volume. However, section 1.12.3 of the DOE test procedure at the time[18] only included heat pump water heaters which have "a maximum current rating of 24 amperes (including the compressor and all auxiliary equipment such as fans, pumps, controls, and, if on the same circuit, any resistive elements) for an input voltage of 250 volts or less." Therefore, electric heat pump water heaters with greater than 24 A at 250 V were not considered in the analysis of the April 2010 final rule, and, as such, the electric storage water heater standards are not applicable to these heat pump water heaters. Under the proposed interpretation in this NOPR, electric heat pump water heaters with greater than 24 A at 250 V and a total input rate less than or equal to 12kW would be subject to the commercial water heater standards, which specify a maximum standby loss. 10 CFR 431.110(a). DOE notes that it has established a test procedure for commercial water heaters (10 CFR 431.106), and any representation made by a manufacturer as to the energy efficiency or energy use of a commercial water heater must be based on testing in accordance with the DOE test procedure, and such representation must fairly disclose the results of such testing. (42 U.S.C. 6314(d)(1))

In determining the input rate of a water heater with a heat pump component for the purpose of classifying such a water heater as either a consumer water heater or a commercial water heater, DOE would consider the total input rate, including all heat pump components and the resistive elements. As specified in the definition of "water heater" and "commercial heat pump water heater," determination of the rated electric power input includes all ancillary equipment. 10 CFR 430.2 and 10 CFR 431.102.

---

[17] The electric storage water heater energy conservation standards established by the April 2010 final rule set a minimum efficiency level that was attainable by all heat pump water heaters available at the time. Therefore, the standard did not eliminate any heat pump water heaters from the market.

[18] At the time of the April 2010 final, rule, the DOE test procedure for consumer water heaters was last updated by a final rule published on July 20, 1998. 63 FR 38737.

Similarly, DOE would consider all heat pump components and resistive elements in determining voltage and amperage.

DOE reviewed the electric heat pump water heater market and found that several new configurations of heat pump water heaters have either become available or will soon become available on the market. Based its review of the market, DOE has identified these new configurations as electric storage water heaters that are heat pump type units.

In the present market, a consumer heat pump water heater typically consists of an air-source heat pump and a storage tank that are integrated together into one assembly. This "typical" consumer heat pump water heater uses electricity, operates around 240 volts, and has two 4,500-watt backup resistance elements within the storage tank that operate non-simultaneously. The new configurations that DOE identified include split-system heat pump water heaters (which consist of a separate heat pump and storage tank that are sold together), heat pump only models (which are sold without a storage tank but require being paired with one), "retrofit-ready" or "plug-in" heat pump water heaters (which are integrated heat pump and storage tank water heaters that can operate on a shared 120V/15A circuit and plugged into a standard 120 V receptacle (*i.e.*, wall outlet)), and ground- or water-source heat pump water heaters.

Split-system heat pump water heaters are currently available and used in residential applications; however, they are relatively uncommon when compared to typical integrated heat pump water heaters. Although split-system heat pump water heaters are more prevalent outside of the United States, they are produced by manufacturers that sell water heaters within the United States. As such, split-system water heaters may become more prevalent in the U.S. market in the future, and the DOE

test procedure should adequately test these products. The current DOE test procedure covers split-system heat pump water heaters and the relevant proposed amendments are discussed in section III.C.8.b of this document. DOE has tentatively determined that split-system heat pump water heaters are covered by the current definitions of "electric storage water heater" and "heat pump type units."

DOE has identified heat pump water heaters models that are sold with only the heat pump (heat pump only water heaters) and must be paired with an external storage tank in the field, with the specific tank characteristics depending on the hot water requirements of the installation (*i.e.*, the heat pump can be used with storage tanks of various storage volumes). Currently, these units are marketed only for commercial use. However, some models of these units have rated voltage and amperage values below the limits specified in the "heat pump type unit" consumer water heater definition. Further, DOE has identified models that will soon enter the market that are marketed for residential and light-commercial use. To the extent that a heat pump only water heater is covered by the definition of "heat pump type unit" consumer water heater, it would be subject to the DOE test procedure for consumer water heaters. DOE proposes to add a definition to cover heat pump only water heaters to 10 CFR 430.2. This definition is presented in section III.A.1.c of this document where products with a similar application are discussed. Test procedure amendments proposed in this document specific to heat pump only water heaters are discussed in section III.C.8.c of this NOPR.

DOE reviewed the plug-in (or "retro-fit ready") heat pump water heater market described previously (integrated heat pump and storage tank water heaters that can operate on a 120V/15A circuit and plugged into a standard 120 V receptacle (*i.e.*, wall outlet)) and has initially found that these products are still under development and are not

commercially available at this time. On December 23, 2019, NEEA published version 7.0 of its Advanced Water Heating Specification,[19] which includes an appendix that describes plug-in heat pump water heaters. As reported, these products are being designed as an integrated heat pump and storage tank for space-constrained installations (*e.g.,* small closets) and to operate on a shared 120V/15A circuit. Indications are that plug-in heat pump water heaters will be marketed for residential use, have input rates at or below the 12 kW threshold to be considered a consumer electric storage water heater, and have voltage and amperage levels below the 250 V and 24 A limits to be considered a "heat pump type unit." Based on the initial information available, plug-in heat pump water heaters would be covered by either the current definition of "electric storage water heater" or "heat pump type units." As plug-in heat pump water heaters are not currently available on the market, DOE is not proposing any changes to the test procedure specific to these products in this NOPR. DOE may reevaluate this tentative determination at such time as when these models enter the market.

DOE has also identified heat pump water heaters that use alternative heat sources (*e.g.,* water- or ground-source) that, although more commonly installed in commercial applications, do have residential applications and are at or below the 12kW limit to be considered a consumer "water heater." Alternative source heat pump water heaters were not prevalent in the market at the time DOE established the current consumer water heater test procedure and therefore were not considered in the development of the current DOE test procedure. 79 FR 40542, 40566-40567 (July 11, 2014).

Significant changes and clarifications to the test setup and test conditions would be required to appropriately represent the various alternative source heat pump water

---

[19] Version 7.0 of NEEA's Advanced Water Heater Specification can be found at: *www.neea.org/img/documents/Advanced-Water-Heating-Specification.pdf.*

heater components and installation requirements. The current test procedure for consumer water heaters incorporates draw patterns to represent an average period of use for the products subject to the test procedure. Section 5.4.1 of appendix E. Alternative source heat pump water heaters were not considered in the development of the current draw pattern requirements. Based on a current review of the market, these water heaters continue to have a small market share and indications are that they are predominantly used in commercial applications. DOE currently does not have data as to the use of such water heaters as installed. Absent such data, DOE is unable to develop and propose test procedure provisions that would be representative of such water heaters during an average period of use. To the extent there is no test procedure for such covered water heaters, they would not be subject to energy conservation standards. Because of the limited market share and unavailability of usage data, DOE has tentatively determined not to propose test procedures for these products.

Based on the forgoing discussion, DOE has tentatively determined that the current definitions of "heat pump type" and "electric storage water heaters" adequately cover the electric heat pump water heaters on the market that are representative of residential use, including "plug in" and alternative source heat pump water heaters, and that a separate definition for "electric heat pump water heaters" is not needed at this time. However, as discussed previously in this NOPR, DOE is proposing to add a new definition to cover heat pump only water heaters.

b. Gas-fired Heat Pump Storage Water Heater

In the April 2020 RFI, DOE requested feedback on whether a separate definition for "gas-fired heat pump storage water heater," similar to the definition in the March

2019 ASHRAE Draft 118.2, was needed or whether the current DOE definitions in 10 CFR 430.2 for "gas-fired storage water heater" and "water heater," which include "heat pump type units," would adequately cover such products for the purpose of performing the DOE test procedure. 85 FR 21104, 21110 (April 16, 2020). AHRI, A.O. Smith, BWC, EEI, Rheem, Rinnai, and SMTI recommended that DOE add a separate definition for "gas-fired heat pump storage water heater." (AHRI, No. 17 at p. 4; A.O. Smith, No. 20 at p. 2; BWC, No. 12 at p. 2; EEI, No. 8 at p. 3; Rheem, No. 14 at p. 3; Rinnai, No. 13 at p. 4; SMTI, No. 19 at p. 2) A.O. Smith further stated that the gas-fired storage water heater input capacity limit (less than or equal to 75,000 Btu/h) is not appropriate for defining a gas-fired heat pump storage water heater that is representative of residential applications. (A.O. Smith, No. 20 at p. 2) AHRI stated that a separate definition for "gas-fired heat pump water heater" is appropriate and that DOE had already established a definition for it as part of the July 2014 final rule. (AHRI, No. 17 at p. 4) However, CEC stated there is no need to add a definition for "gas-fired heat pump storage water heater" because the definition currently in 10 CFR 430.2 for "gas-fired storage water heater" and "water heater" includes "heat pump type units," which adequately covers gas-fired heat pump storage water heaters. (CEC, No. 11 at p. 2) CEC argued that introducing the new definition as suggested under the March 2019 ASHRAE Draft 118.2 would indirectly limit the scope of heat pump water heaters standards by limiting the size of the gas-fired heat pump water heaters to be tested. (*Id.*) NEAA agreed that the current definitions for "gas-fired storage water heater" and "heat pump units" are adequate to cover gas-fired heat pump storage water heaters for purposes of testing, but the commenter noted there is value in creating a definition for market clarity. (NEEA, No. 21 at p. 6)

In the July 2014 final rule, DOE defined a "gas-fired heat pump water heater" as "a water heater that uses gas as the main energy source, has a nameplate input rating of 75,000 Btu/h (79 MJ/h) or less, has a maximum current rating of 24 amperes (including all auxiliary equipment such as fans, pumps, controls, and, if on the same circuit, any resistive elements) at an input voltage of no greater than 250 volts, has a rated storage volume not more than 120 gallons (450 liters), and is designed to transfer thermal energy from one temperature level to a higher temperature level to deliver water at a thermostatically controlled temperature less than or equal to 180 °F (82 °C)." 79 FR 40542, 40567 (July 11, 2014). DOE also stated that gas-fired heat pump water heaters are covered by the test procedure established in the July 2014 final rule. *Id.* at 79 FR 40549. The November 2016 final rule replaced this definition with the current definition of "gas-fired storage water heater." 81 FR 79261, 79320-79321 (Nov. 10, 2016). The current definition of "water heater," which includes "heat pump type units" was added in a final rule published on February 7, 1989. 54 FR 6062, 6075. DOE reasoned in the November 2016 final rule that, because the definition of "gas-fired heat pump water heater" is not used in DOE's test procedures or energy conservation standards for consumer waters, removing this definition will have no effect on the implementation of DOE's regulations. 81 FR 79261, 79287.

Currently, a water heater that uses gas as the main energy source, has a nameplate input rating of 75,000 Btu/h or less, and contains more than one gallon of water per 4,000 Btu per hour of input is a gas-fired storage water heater. 10 CFR 430.2. If the gas-fired storage water heater also has a heat pump with a maximum current rating of 24 amperes at a voltage no greater than 250 volts, is designed to transfer thermal energy from one temperature level to a higher temperature level for the purpose of heating water, including all ancillary equipment such as fans, storage tanks, pumps, or controls

necessary for the device to perform its function, it would be a heat pump type unit. 10 CFR 430.2. This definition of heat pump type unit is not exclusive of gas-fired units.

The input rate of models currently in development for residential application are less than 20,000 Btu/h, which the March 2019 ASHRAE Draft 118.2 defines as the limit for gas-fired heat pump water heaters, and which is well below the 75,000 Btu/h limit in DOE's regulations. Gas-fired heat pump water heaters currently under design will likely have voltage and amperage requirements below the DOE "heat pump type unit" requirements, as electricity is not the main fuel source. Recognizing that the market for heat pump type units that are gas-fired is still developing, limiting coverage to less than 20,000 Btu/h (consistent with March 2019 ASHRAE Draft 118.2) would not accommodate the potential for future products designed for residential applications that may have input rates above 20,000 Btu/h. Therefore, DOE has tentatively determined that the definitions of "heat pump type" and "gas-fired storage water heaters" adequately cover the water heaters that are within the ASHRAE definition of "gas-fired heat pump water heaters," and a separate DOE regulatory definition is not needed at this time. Further, as DOE stated in the July 2014 final rule, gas-fired heat pump water heaters are covered by the DOE test procedure established in that rule. 79 FR 40542, 40549 (July 11, 2014).

c. Gas-fired Instantaneous Water Heater

As discussed previously in this document, a gas-fired instantaneous water heater is a water heater that uses gas as the main energy source, has a nameplate input rating less than 200,000 Btu/h, and contains no more than one gallon of water per 4,000 Btu per hour of input. 10 CFR 430.2. In the April 2020 RFI, DOE requested feedback on the

typical application of a specific configuration of gas-fired instantaneous water heaters, commonly referred to as "circulating gas-fired instantaneous water heaters." 85 FR 21104, 21113 (April 16, 2020). As explained in the April 2020 RFI, DOE has found that several manufacturers produce consumer gas-fired instantaneous water heaters that are designed to be used with a volume of stored water (usually in a tank, but sometimes in a recirculating hot water system of sufficient volume, such as a hydronic space heating or designated hot water system) in which the water heater does not provide hot water directly to fixtures, such as a faucet or shower head, but rather replenishes heat lost from the tank or system through hot water draws or standby losses by circulating water to and from the tank or other system. *Id.* These circulating gas-fired instantaneous water heaters are typically activated by an aquastat[20] installed in a storage tank that is sold separately or by an inlet water temperature sensor. *Id.* DOE further stated that while the products identified by DOE are within the statutory and regulatory definition of a consumer water heater as a covered product, the design and application of circulating gas-fired instantaneous water heaters makes testing to the consumer water heater test procedure difficult, if not impossible, as these products are not capable of delivering water at the temperatures and flow rates specified in the UEF test method. *Id.*

In response to the April 2020 RFI, AHRI, APGA, Rheem, and Rinnai recommended generally that DOE amend the regulatory definitions of gas-fired instantaneous water heaters to exclude models designed exclusively for commercial use with input rates below the consumer water heater input rate limit *(i.e.*, ≤200,000 Btu/h) and provided circulating gas-fired instantaneous water heaters as an example. (AHRI, No. 17 at p. 2; APGA, No. 16 at pp. 1-2; Rheem, No. 14 at p. 2; Rinnai, No. 13 at p. 2)

[20] An "aquastat" is a temperature measuring device typically used to control the water temperature in a separate hot water storage tank.

A.O. Smith addressed circulating gas-fired water heaters specifically, stating that these models are produced at input rates both above and below the consumer water heater input rate cut-off for gas-fired instantaneous water heaters, and that all circulating water heaters, regardless of input rate, serve commercial applications; as such, they should be excluded from the consumer water heater regulations. (A.O. Smith, No. 20 at pp. 1-2) AHRI, Rheem, and Rinnai stated that these types of water heaters are sold into commercial building applications and should not be tested using a residential draw profile, which would not be applicable. (AHRI, No. 17 at p. 11; Rheem, No. 14 at p. 8; Rinnai, No. 13 at p. 10)

Currently, an enforcement policy[21] is in place addressing circulating water heaters. As provided in the enforcement policy, DOE will not seek civil penalties for the failure to properly certify covered products or the distribution in commerce by a manufacturer or private labeler of covered products that are not in compliance with an applicable energy conservation standard, if the violation occurs on or before December 31, 2021, with respect to an individual model of water heater that:

- Meets the statutory definition of an instantaneous type of consumer water heater per 42 U.S.C. 6291(27);

- Does not have an operational scheme in which the burner or heating element initiates and terminates heating based on sensing flow;

[21] Enforcement policy for circulating water heaters is available at: *www.energy.gov/sites/prod/files/2019/09/f66/Enforcement%20Policy-CirculatingWH.92019.pdf.*

- Has a water temperature sensor located at the inlet of the water heater or in a separate storage tank that is the primary operating temperature means of initiating and terminating heating;

- Must be used in combination with a recirculating pump and either a separate storage tank or water circulation loop in order to achieve the water flow and temperature conditions recommended in the manufacturer's installation and operation instructions;

- Is designed to provide outlet hot water at a thermostatically controlled temperature greater than 180 °F; and

- Meets the corresponding energy conservation standards in 10 CFR 431.110.

As provided in the enforcement policy, a water heater must first meet the statutory definition of an instantaneous type of consumer water heater per 42 U.S.C. 6291(27) in order to be a circulating water heater. Inherent to being a water heater per 42 U.S.C. 6291(27), a product must be a "consumer product." DOE's authority under the Energy Conservation Program for Consumer Products Other Than Automobiles established by EPCA (42 U.S.C. 6291-6309) applies to "consumer products." (*See* 42 U.S.C. 6292)

In relevant part, 42 U.S.C. 6291(1) states that a "consumer product" means any article of a type which, to any significant extent, is distributed in commerce for personal use or consumption by individuals. Through an examination of product literature, DOE has found that circulating water heaters are predominately marketed for commercial applications. However, the input rates of many of the available models are below the

maximum input rate of a consumer water heater and can therefore be suitable for residential applications. As such, DOE has tentatively determined that circulating water heaters are covered "consumer products." Further, circulating water heaters operate similarly to the heat pump only water heaters discussed in section III.A.1.a, which DOE tentatively determined are marketed towards consumers and have residential applications (*e.g.,* they extract water from a storage tank, heat the water, and return the heated water to the storage tank). The circulating water heaters currently on the market circulate water at high flow rates (*e.g.,* greater than 10 gpm) and are, for the most part, designed to deliver water at a temperature greater than 180 °F. These characteristics suggest that the circulating water heaters on the market would not be appropriate for residential applications. However, when developing the test procedure currently in appendix E, DOE is required to develop a test procedure that applied, to the maximum extent practicable, to all water heating technologies in use and to future water heating technologies. (42 U.S.C. 6295(e)(5)(H)) As a circulating water heater could be designed to operate in a similar manner to other consumer water heaters (*i.e.,* heat pump only water heaters) and at conditions appropriate for residential applications, DOE is required to amend appendix E to address these products.

DOE proposes to add the definition described below for circulating water heaters to 10 CFR 430.2. The proposed definition also covers heat pump only water heaters which are discussed in section III.A.1.a in this NOPR. Test procedure amendments for circulating water heaters are discussed in section III.C.9 of this document.

DOE proposes to define "circulating water heater" at 10 CFR 430.2 as "an instantaneous or heat pump type water heater that does not have an operational scheme in which the burner, heating element, or compressor initiates and terminates heating based

on sensing flow; has a water temperature sensor located at the inlet of the water heater or in a separate storage tank that is the primary means of initiating and terminating heating; and must be used in combination with a recirculating pump and either a separate storage tank or water circulation loop in order to achieve the water flow and temperature conditions recommended in the manufacturer's installation and operation instructions."

With regard to the other gas-fired instantaneous water heaters referenced by commenters, DOE has also examined the market for gas-fired instantaneous water heaters with an emphasis on product lines with input rates both above and below the consumer and commercial input rate threshold of 200,000 Btu/h. The models with an input rate at or below the 200,000 Btu/h threshold could be used in consumer applications, are nearly indistinguishable from water heaters marketed and used in consumer applications, and are completely self-contained; that is, no other components would be required for these products to operate within a residence. As such, DOE has tentatively determined that these models continue to be considered "consumer products" and are subject to the test procedures and energy conservation standards for consumer gas-fired instantaneous water heaters.

DOE has also examined gas-fired water heaters with input rates of 200,000 Btu/h or less, containing less than one gallon of water per 4,000 Btu/h of input, and with rated storage volumes greater than 2 gallons. In the July 2014 final rule, storage volume requirements were removed from the definition of a "gas-fired instantaneous water heater." 79 FR 40542, 40567 (July 11, 2014). In the December 2016 final rule, DOE stated that definitions for consumer water heaters added to EPCA under the National Appliance Energy Conservation Act of 1987 (NAECA; Pub. L. 100–12 (March 17, 1987)), which amended EPCA, do not place any limitation on the storage volume of

consumer water heaters. (42 U.S.C. 6291(27); 81 FR 96204, 96210 (Dec. 29, 2016)) DOE further stated that the energy conservation standards established by EPCA for consumer water heaters apply to all consumer water heaters regardless of storage volume. 81 FR 96204, 96210. DOE also acknowledged that its delay in issuing test procedures for such products, as well as statements it has made in the past, may have caused confusion about whether these products are covered by energy conservation standards for consumer water heaters, and that achieving compliance with the statutory standards immediately would be quite burdensome for industry. *Id.* at 81 FR 96211. As such, DOE stated that it will not enforce the statutory standards applicable to these products until some point after DOE finalizes a conversion factor and the converted standards applicable to those products. *Id*. DOE has tentatively determined that the interpretation presented in the December 2016 final rule for gas-fired instantaneous water heaters with storage volume greater than 2 gallons is still valid.

d. Tabletop Water Heaters

On January 17, 2001, DOE published a final rule (January 2001 final rule) that established definitions and created a separate product class for tabletop water heaters. 66 FR 4474. A "tabletop water heater," was defined in the January 2001 final rule as a water heater in a rectangular box enclosure designed to slide into a kitchen countertop space with typical dimensions of 36 inches high, 25 inches deep, and 24 inches wide. *Id.* at 66 FR 4497. The definition for "tabletop water heater" was removed from appendix E as part of the July 2014 final rule and was inadvertently not added to 10 CFR 430.2. 79 FR 40542, 40567–40568 (July 11, 2014). However, energy conservation standards for tabletop water heaters are still specified at 10 CFR 430.32(d).

In the April 2020 RFI, DOE requested feedback on whether the previous definition for “tabletop water heater” is still appropriate, and whether such products should continue to be considered separately from other classes of consumer water heaters. 85 FR 21104, 21108 (April 16, 2020). AHRI, A.O. Smith, BWC, Rheem, and Rinnai commented that the definition for “tabletop water heater” is still appropriate and should remain as a separate product class. (AHRI, No. 17 at p. 3; A.O. Smith, No. 20 at p. 2; BWC, No. 12 at p. 2; Rheem, No. 14 at p. 2; Rinnai, No. 13 at p. 2) EEI suggested that the definition include a rated capacity of at least 20 gallons and exclude the phrases “rectangular box” and "designed to slide into a kitchen countertop space" to make the definition broader. (EEI, No. 8 at p. 3) Keltech stated that point-of-use (POU) units may benefit from being classified as a "tabletop water heater" and that a category should be created for POU water heaters that can be installed under a countertop. (Keltech, No. 7 at p. 1)

In the January 2001 final rule, DOE separated tabletop water heaters from the electric storage water heater product class “due to strict size limitations for these products.” 66 FR 4474, 4478 (Jan. 17, 2001). Tabletop water heaters are a unique type of water heater that are designed to fit into a countertop and provide a working surface in the installed location; as such, they are inherently size-constrained. DOE has tentatively determined that excluding the phrases “rectangular box” and "designed to slide into a kitchen countertop space" would make the tabletop water heater definition broader but would also remove the distinction of the key features that distinguish tabletop water heaters from electric storage water heaters (*i.e.,* the tabletop water heater product class addresses the very specific size limitations and location installations associated with these products). Further, the addition of a minimum rated storage volume of 20 gallons would define a scope of coverage that might not include the full volume range of water heaters

in a rectangular box enclosure designed to slide into a kitchen countertop space. Therefore, DOE has tentatively determined not to add a minimum rated storage volume.

A POU water heater is, in general terms, a water heater that is located where the hot water is needed (*e.g.,* under a sink or counter). Water heaters that are installed under sinks or counters are typically small electric storage water heaters (30 gallons or less) or electric instantaneous water heaters. For small electric storage water heaters, these products are currently covered by the definition for electric storage water heater, which does not have storage volume requirements. *See* 10 CFR 430.2. The test procedure for electric storage water heaters varies slightly depending on the delivery capacity of the water heater, which is a result of the first-hour rating test. *See* section 5.4.1 of appendix E. DOE has tentatively determined that POU or small electric storage water heaters are adequately covered by the current DOE test procedure when tested to the very small or low draw patterns. The same can be said for electric instantaneous water heaters, for which the test procedure also varies slightly depending on the delivery capacity of the water heater, which is a result of the Max GPM test. *See* section 5.4.1 of appendix E.

For the reasons discussed previously, DOE proposes to add the "tabletop water heater" definition that was removed from appendix E in the July 2014 final rule to 10 CFR 430.2.

e. Residential-Duty Commercial Water Heaters

In the April 2020 RFI, DOE requested comment on the definition for "residential-duty commercial water heater," which defines a category of commercial water heaters that are subject to the consumer water heater test procedure. 85 FR 21104, 21108 (April 16, 2020). AHRI, A.O. Smith, Rheem, and Rinnai supported the current definition of

"residential-duty commercial water heater" and had no recommended changes. (AHRI, No. 17 at p. 3; A.O. Smith, No. 20 at p. 2; Rinnai, No. 13 at p. 3; Rheem, No. 14 at p. 2) Keltech recommended adding the intended market for the water heater as another criteria for determining whether a water heater is a residential-duty commercial water heater and stated that if a water heater is not intended for sale in a consumer setting, it should not be held to consumer requirements. (Keltech, No. 7 at p. 1) DOE acknowledges that some water heaters, which are intended for commercial use, are covered by the residential-duty commercial water heater definition and tested and rated to the consumer water heater test procedure and residential-duty commercial water heater energy conservation standards. These water heaters have characteristics that are similar to water heaters with residential applications and, as such, under 42 U.S.C. 6295(e)(5)(F), cannot be excluded from being tested and rated using the consumer water heaters test procedure and residential-duty commercial water heater energy conservation standards. Further, DOE has tentatively determined that whether a product is marketed as commercial or residential may not always be indicative of the intended installation location. For example, water heaters intended for residential use are sometimes marketed as "commercial-grade" as a means to convey reliability.[22] Therefore, DOE has tentatively determined not to amend the definition for "residential-duty commercial water heater."

B. Updates to Industry Standards

The current DOE test procedure in appendix E references the following industry standards:

[22] A water heater designed to be installed in commercial applications will typically be used more often and be subjected to environments that are harsher than would be experienced by a water heater designed to be installed in residential application. Therefore, a "commercial-grade" water heater could be considered more reliable, as it can operate longer in such an environment without malfunctioning.

- ASHRAE 41.1-1986 (Reaffirmed 2006), Standard Method for Temperature Measurement (ASHRAE 41.1-1986 (RA 2006)); and

- ASTM D2156-09, (ASTM D2156-09), Standard Test Method for Smoke Density in Flue Gases from Burning Distillate Fuels.

ASHRAE 41.1-1986 (RA 2006) was superseded by ASHRAE 41.1-2013 on January 30, 2013 (ASHRAE 41.1-2013). ASHRAE 41.1-2013 was superseded by ASHRAE 41.1-2020 on June 30, 2020. Updates to ASHRAE 41.1 are discussed in section III.B.1.

ASTM D2156-09 was reapproved without modification in 2018 (ASTM D2156-09 (RA 2018)). Therefore, DOE proposes to update the reference of ASTM D2156-09 to the most recent industry standard (*i.e.,* ASTM D2156-09 (RA 2018)). ASTM D2156-09 and ASTM D2156-09 (RA 2018) directly reference ASTM E97-1987 (W1991), which is necessary to perform the procedures within ASTM D216-09 and ASTM D2156-09 (RA 2018). Therefore, DOE also proposes to incorporate by reference ASTM E97-1987 (W1991).

ASHRAE maintains a published water heater test procedure titled, "ANSI/ASHRAE Standard 118.2-2006 (RA 2015), Method of Testing for Rating Residential Water Heaters" (ANSI/ASHRAE 118.2-2006 (RA 2015)). The ANSI/ASHRAE 118.2-2006 (RA 2015) test procedure is similar to the DOE test procedure that was in effect prior to the July 2014 final rule, although neither the former nor the current DOE consumer water heater test procedure reference ANSI/ASHRAE Standard 118.2-2006 (RA 2015). In March 2019, ASHRAE published the March 2019 ASHRAE Draft 118.2, the second public review draft of Board of Standards Review

(BSR) ANSI/ASHRAE Standard 118.2-2006R, "Method of Testing for Rating Residential Water Heaters and Residential-Duty Commercial Water Heaters," which DOE referenced in the April 2020 RFI. 85 FR 21104, 21109-21111 (April 16, 2020). In April 2021, ASHRAE published substantive changes to a previous public review draft[23] of BSR ANSI/ASHRAE Standard 118.2-2006R, "Method of Testing for Rating Residential Water Heaters and Residential-Duty Commercial Water Heaters." (April 2021 ASHRAE Draft 118.2) The March 2019 ASHRAE Draft 118.2 and April 2021 ASHRAE Draft 118.2 are examined together in section III.B.2. Both the March 2019 ASHRAE Draft 118.2 and April 2021 ASHRAE Draft 118.2 are similar to the current DOE test procedure but include some differences throughout, some of which would result in test procedure results different from the current DOE test procedure.

As discussed previously in this document, DOE will adopt industry test standards as DOE test procedures for covered products and equipment, unless such methodology would be unduly burdensome to conduct or would not produce test results that reflect the energy efficiency, energy use, water use (as specified in EPCA) or estimated operating costs of that equipment during a representative average use cycle. 10 CFR part 430, subpart C, appendix A, Section 8(c). While DOE would only consider adopting through incorporation by reference (IBR) a finalized version of ASHRAE 118.2, DOE is interested in receiving comments on the merits of the draft in anticipation of such a possibility, or to consider incorporating aspects of the draft into a revised DOE test procedure. The differences between the March 2019 ASHRAE Draft 118.2, the April

[23] The April 2021 ASHRAE Draft 118.2 shows only the proposed substantive changes to the March 2019 ASHRAE Draft 118.2. All sections not included in the April 2021 ASHRAE Draft 118.2 are as proposed in the March 2019 ASHRAE Draft 118.2 or have not been changed in a way that their content affects the results of the test procedure proposed in the March 2019 ASHRAE Draft 118.2.

2021 ASHRAE Draft 118.2, and the DOE test procedure are discussed in section III.B.2 of this NOPR.

1. ASHRAE 41.1

As stated previously, ASHRAE 41.1-1986 (RA 2006) was superseded by ASHRAE 41.1-2013 and ASHRAE 41.1-2013 was superseded by ASHRAE 41.1-2020. ASHRAE 41.1-2013 removed the aspirated wet bulb psychrometer descriptions and stated they would be included in the next revision to ASHRAE 41.6, "Standard Method for Humidity Measurement." ASHRAE 41.6 was updated on July 3, 2014 and included the aspirated wet bulb psychrometer descriptions that were removed in ASHRAE 41.1-2013. ASHRAE 41.1-2013 also added uncertainty analysis for temperature measurements, information for thermistor-type devices, descriptions for thermopiles, and reorganized the standard to be consistent with other ASHRAE standards. ASHRAE 41.1-2020 added conditional steady-state test criteria and further updated the standard to meet ASHRAE's mandatory language requirements.

Section 3.2.1 of appendix E requires that temperature measurements be made in accordance with ASHRAE 41.1-1986 (RA 2006), and section 3.2.2 of appendix E provides accuracy and precision requirements for air dry bulb, air wet bulb, inlet and outlet water, and storage tank temperatures. Sections 5.2.2.1 and 5.3.2 of appendix E effectively require steady-state operation in which the flow-activated water heater is operating at the maximum input rate, is supplied with water at a temperature of 58 °F ±2 °F, and delivers water at a temperature of 125 °F ±5 °F.

DOE reviewed ASHRAE 41.1-1986 (RA 2006), ASHRAE 41.1-2013, and ASHRAE 41.1-2020 and found that the sections most relevant to appendix E are the

temperature measurement sections (*i.e.,* sections 5 through 11 of ASHRAE 41.1-1986 (RA 2006), section 7 of ASHRAE 41.1-2013, and section 7 of ASHRAE 41.1-2020)[24] and the steady-state test criteria added in ASHRAE 41.1-2020. The information in the temperature measurement sections of the three versions of ASHRAE 41.1 examined does not vary significantly. The additional steady-state test criteria of ASHRAE 41.1-2020 varies significantly from and is more stringent than[25] the criteria specified in sections 5.2.2.1 and 5.3.2 of appendix E; however, the appendix E criteria supersedes those in ASHRAE 41.1-2020. DOE has tentatively determined that updating the reference of ASHRAE 41.1-1986 (RA 2006) to the most recent version of the industry standard (*i.e.,* ASHRAE 41.1-2020) would not have a significant effect on the test results, as the content of the relevant sections of the ASHRAE 41.1 standards have not changed significantly and the new content published in ASHRAE 41.1-2020 is superseded by appendix E. As such, DOE proposes to update the reference of ASHRAE 41.1-1986 (RA 2006) to ASHRAE 41.1-2020. ASHRAE 41.1-2020 references ASHRAE 41.6-2014 and requires its use when measuring the wet bulb temperature. The wet bulb temperature is required when testing heat pump water heaters to appendix E and, therefore, DOE proposes to incorporate by reference ASHRAE 41.6-2014.

2. ASHRAE 118.2

[24] Sections 5 through 11 of ASHRAE 41.1-1986 (RA 2006) were combined into section 7 of ASHRAE 41.1-2013.

[25] If adopted, section 5.5.3 of ASHRAE 41.1-2020 would be used to determine steady-state operation within sections 5.2.2.1 and 5.3.2 of appendix E. Using this criteria, a flow-activated water heater delivering water between 120 °F and 121° F, which is within the current delivery temperature range of 125 °F ± 5 °F, would not be considered in steady-state due to the difference in temperature between the average of the sample and the set point temperature.

a. Scope

Section 2 of the March 2019 ASHRAE Draft 118.2 defines the scope of products covered by the industry test standard more narrowly than the definitions for consumer water heaters and relevant commercial water heater definitions contained in EPCA. For example, section 2 of the March 2019 ASHRAE Draft 118.2 limits the storage volume for storage-type water heaters to 120 gallons or less and limits the maximum delivery temperature to 180 °F (82 °C), whereas EPCA does not define limits on storage volume or maximum delivery temperature (42 U.S.C. 6291(27); 42 U.S.C. 6311(12)(A)-(B).

In the April 2020 RFI, DOE requested comment on whether the March 2019 ASHRAE Draft 118.2 test method could be applied to water heaters beyond the scope defined in the March 2019 ASHRAE Draft 118.2 to cover all water heaters included within the scope of DOE's definitions for consumer water heaters and residential-duty commercial water heaters. 85 FR 21104, 21110 (April 16, 2020). And if modifications to the March 2019 ASHRAE Draft 118.2 would be required, DOE requested comment on what those modifications should be. *Id.* CA IOUs and Rinnai expressed their understanding that the March 2019 ASHRAE Draft 118.2 applies to all water heaters within the current scope of DOE's test procedure. (CA IOUs, No. 18 at p. 3; Rinnai, No. 13 at p. 5) A.O. Smith stated that most aspects of the March 2019 ASHRAE Draft 118.2 could be applied to water heaters beyond the scope defined in section 2 of the March 2019 ASHRAE Draft 118.2 with similar characteristics. (A.O. Smith, No. 20 at p. 3) Rheem supported application of the March 2019 ASHRAE Draft 118.2 test method to cover a broader scope, including all water heaters within DOE's definitions of consumer water heaters. However, Rheem commented that modification may be required to address key differences, along with validation testing of any changes. (Rheem, No. 14 at pp. 3)

The April 2021 ASHRAE Draft 118.2 did not propose changes to the scope; therefore, section 2 of the April 2021 ASHRAE Draft 118.2 is the same as the March 2019 ASHRAE Draft 118.2. DOE has tentatively reached a similar conclusion as the commenters that the March 2019 ASHRAE Draft 118.2 and April 2021 ASHRAE Draft 118.2 could be applied to water heaters that are outside of the scope found in section 2 of the March 2019 ASHRAE Draft 118.2 and within the scope of DOE's current consumer water heater test procedure. As noted previously in this section, the March 2019 ASHRAE Draft 118.2 scope limits the maximum rated storage capacity at 120 gallons and the maximum delivery temperature at 180 °F; whereas the scope prescribed by EPCA and the relevant implementing regulations does not include these limits. Further, DOE has found through testing that models with rated storage volumes above 120 gallons or that can deliver water above 180 °F can be tested to DOE's consumer water heater test procedure. Given the similarities between the current DOE test procedure and the March 2019 ASHRAE Draft 118.2 and April 2021 ASHRAE Draft 118.2, such models could also be tested using the ASHRAE test standard. Therefore, DOE has tentatively determined that the test procedure presented in the March 2019 ASHRAE Draft 118.2 and the April 2021 ASHRAE Draft 118.2 could be used to test water heaters outside of the scope presented in section 2 of the March 2019 ASHRAE Draft 118.2.

b. Test Setup

Figures

Section 6 of the March 2019 ASHRAE Draft 118.2 includes new figures that provide greater detail illustrating how to set up a water heater for test. For example, a by-pass (purge) loop is added to the inlet water line in Figures 1 through 8. Additional figures include: a test set-up for a storage water heater with a side inlet water line and top

outlet water line; a test set-up for an instantaneous water heater with connections on the top; the placement of a thermal break in the inlet water line (the thermal break is added to the test set-up to prevent heat from traveling up the inlet piping into the by-pass loop section, as discussed in the next subsection); and two configurations for the thermocouple tree if it needs to be installed through the outlet water line.

In the April 2020 RFI, DOE requested feedback on whether the figures in appendix E should be updated to include additional detail, including the detail provided in the figures in the March 2019 ASHRAE Draft 118.2. 85 FR 21104, 21110 (April 16, 2020). If thought to be necessary, DOE asked that commenters address whether the additional specificity provided in the figures could be too restrictive for the purpose of the DOE test procedure, or whether such specificity would be justified by improving reproducibility of test results. *Id*. AHRI, A.O. Smith, CA IOUs, CSA, NEEA, Rheem, and Rinnai recommended that the figures in appendix E be updated to include additional detail in alignment with ASHRAE 118.2. (AHRI, No. 17 at p. 5; A.O. Smith, No. 20 at p. 3; CA IOUS, No. 18 at p. 3; CSA, No. 10 at p. 3; NEEA, No. 21 at p. 6; Rheem, No. 14 at p. 4; Rinnai, No. 13 at p. 5) Rheem stated further that the figures in the March 2019 ASHRAE Draft 118.2 represent test set-up configurations that have been utilized by the AHRI contract laboratories and were also developed through a best practices effort to improve test consistency and repeatability across different labs. (Rheem, No. 14 at p. 4) However, A.O. Smith suggested that any updates to the figures in appendix E be used for reference only and not be required, in order to avoid being overly restrictive. (A.O. Smith, No. 20 at p. 3)

Upon further comparison of the figures within the March 2019 ASHRAE Draft 118.2 and appendix E, DOE found that the location in which the inlet temperature is

measured in figures 2A, 2B, and 3 of the March 2019 ASHRAE Draft 118.2 is different than in the corresponding figures 2 and 3 within appendix E. In the March 2019 ASHRAE Draft 118.2, the inlet temperature is measured on the upstream side of the heat trap formed by the U-bend in the required piping, while in appendix E the inlet temperature measurement location is on the downstream side of the U-bend. All figures in the March 2019 ASHRAE Draft 118.2 have the inlet temperature location on the upstream side of the U-bend, while the figures in appendix E vary depending on the type of water heater being tested. Maintaining the same inlet temperature location for all water heater types would simplify the test setup as compared to the current requirements of appendix E. Further, given the short pipe distance between the upstream and downstream side of the U-bend (on the order of a few inches), it is unlikely that changing the location from the downstream side to the upstream side would result in a measurable difference in temperature. However, DOE does not have adequate test data to fully understand the effect that changing the location of the inlet temperature measurement will have on test results and therefore is not proposing the use of the inlet temperature locations specified in the March 2019 ASHRAE Draft 118.2. DOE welcomes information or data that may demonstrate any impact of inlet temperature measurement location on energy efficiency results.

Thermal Break

Section 6 of the March 2019 ASHRAE Draft 118.2 includes new figures that provide greater detail illustrating how to set up a water heater for test. These additional figures include the installation location of a thermal break in the inlet water line. Figure 9 of the March 2019 ASHRAE Draft 118.2 shows the thermal break installed in greater detail than the other figures and provides more detail on the material properties of the

thermal break. The thermal break is added to the test set-up to prevent heat from traveling up the inlet piping into the by-pass loop section. When purging before a draw, any heat that is transferred from the water heater through the inlet piping to the by-pass loop section would be lost, as the by-pass loop is replenished with cold supply water. The thermal break helps to prevent this heat loss.

In the April 2020 RFI, DOE requested feedback on whether a definition of "thermal break"[26] should be added to its consumer water heater test procedure. 85 FR 21104, 21110 (April 16, 2020). AHRI, A.O. Smith, BWC, CSA, Keltech, NEEA, Rheem, and Rinnai supported the addition of a definition for "thermal break" to the test procedure. (AHRI, No. 17 at p. 5; A.O. Smith, No. 20 at p. 3; BWC, No. 12 at p. 2; CSA, No. 10 at pp. 3; Keltech, No. 7 at p. 1; NEEA, No. 21 at p. 6; Rheem, No. 14 at p. 4; Rinnai, No. 13 at p. 5) However, CEC argued that there is no need to add the definition to the test procedure since the definition can be incorporated by referencing a finalized version of ASHRAE 118.2. (CEC, No. 11 at p. 2)

In the April 2020 RFI, DOE requested feedback on the necessity of a thermal break if no by-pass or purge loop is included in the test set-up. 85 FR 21104, 21110 (April 16, 2020). AHRI, A.O. Smith, and Rinnai stated that a thermal break should be included in the test set-up regardless of whether there is a by-pass or purge loop. (AHRI, No. 17 at p. 5; A. O. Smith, No. 20 at p. 3; Rinnai, No. 13 at p. 5) CSA, NEEA, and Rheem stated that a thermal break is not needed if no by-pass or purge loop is present. (CSA, No. 10 at p. 4; NEEA, No. 21 at p. 6; Rheem, No. 14 at p. 4)

[26] A "thermal break" is defined in the March 2019 ASHRAE Draft 118.2 as a nipple made of material that has thermal insulation properties (*e.g.,* plastics) to insulate the by-pass loop from the inlet piping. It should be able to withstand a pressure of 150 psi and a temperature of 150 °F.

Thermal breaks are not typically installed in the field. Therefore, installation of a thermal break is not representative of an actual installation configuration. The purpose of a thermal break is to minimize unrepresentative effects of other parts of the test setup. A by-pass loop is a method test labs use to ensure inlet water temperatures are within the bounds of the test procedure (*i.e.*, within 58 °F ±2 °F by the first measurement of the draw, which occurs at either 15 or 5 seconds from the start of draw when testing to the first-hour rating or 24-hour simulated-use test, respectively), but its inclusion in the test setup can create a condition whereby a constant low temperature can remove energy from the water heater at a higher rate than would be removed in the field. Heat naturally travels through the inlet piping during standby, and the flow rates and inlet temperatures required by the test procedure do not always counteract this heating of the inlet piping before the required inlet temperature measurements are taken. The addition of a thermal break can help prevent these unrepresentative tank losses due to the by-pass loop by creating a barrier between the highly conductive piping materials. The inclusion of a thermal break in test setups that use a by-pass loop would likely result in test results that are more representative than a test setup with a by-pass loop and no thermal break. However, use of a by-pass loop is not the only possible test setup for meeting the test conditions within appendix E and it is unclear the effect that requiring a thermal break in test setups would have on the results from testing using a setup other than one employing a by-pass loop. Absent such information DOE is not proposing to require the use of a thermal break at this time. Therefore, DOE has tentatively determined that a definition for "thermal break" is not necessary to include, and DOE is not proposing one in this NOPR.

In the April 2020 RFI, DOE requested feedback on whether the maximum temperature the thermal break must be able to withstand would appropriately be set at

150 °F, as is set in the March 2019 ASHRAE Draft 118.2. 85 FR 21104, 21110 (April 16, 2020). AHRI, A.O. Smith, BWC, CSA, Rheem, and Rinnai commented that a temperature of at least 150 °F is an appropriate temperature for a thermal break to be able to withstand. (AHRI, No. 17 at p. 5; A.O. Smith, No. 20 at p. 3; BWC, No. 12 at p. 2; CSA, No. 10 at pp. 3-4; Rheem, No. 14 at p. 4; Rinnai, No. 13 at p. 5-6) AHRI and BWC further commented that a thermal break should be made of plastic or another material that is not thermally conductive. (AHRI, No. 17 at p. 5; BWC, No. 12 at p. 2) Keltech stated that thermal breaks should be able to withstand a maximum temperature of at least 200 °F, stating that 150 °F might pose a problem for water heaters capable of producing more than 125 °F. (Keltech, No. 7 at p. 1)

The thermal break is installed on the inlet water line, upstream of the thermocouple measuring the inlet water temperature. DOE examined its test data and found that, when water was not being drawn off, the maximum temperature measured by the thermocouple measuring the inlet water temperature never exceeded 100 °F. Therefore, a thermal break that is installed upstream of the thermocouple measuring the inlet water temperature would not experience water temperatures exceeding 100 °F. However, as stated previously, DOE is not proposing to require the use of a thermal break and, as such, does not need to propose the maximum temperature the thermal break must be able to withstand.

c. First-Hour Rating

Flow Rate

The April 2021 ASHRAE Draft 118.2 indicates that the flow rate for water heaters with rated storage volumes less than 20 gallons would be 1.5 ±0.25 gpm (5.7

±0.95 L/min). DOE has identified consumer water heaters with storage volumes less than 20 gallons and with input rates near or at the maximum input rate specified at 10 CFR 430.2 (*i.e.*, water heaters with low volume and high input rate). Section 5.3.3, "First-Hour Rating Test" of appendix E requires that water heaters with a storage volume less than 20 gallons be tested at 1.0 ±0.25 gallons per minute (gpm) (3.8 ±0.95 liters (L)/minute (min)), as opposed to 3.0 ±0.25 gpm (11.4 ±0.95 L/min) required for water heaters with rated storage volumes greater than or equal to 20 gallons. Water heaters with low volume and high input rates can potentially operate indefinitely at the 3.0 ±0.25 gpm (11.4 ±0.95 L/min) flow rate. When tested as currently required by appendix E, such products would have a measured FHR around 60 gallons (227 L) and, therefore, would be required to use the medium draw pattern, although such models could be used in applications similar to water heaters that are required to test using the high draw pattern (*e.g.*, flow-activated instantaneous water heaters with high input rates and storage water heaters with greater than 20 gallons stored water and high input rates and/or volumes). As such, the current method of testing these products may not best represent how they are used in the field.

In the April 2020 RFI, DOE requested feedback on the consumer water heater test procedure with respect to testing the delivery capacity of non-flow activated water heaters with low volume and high input rate. 85 FR 21104, 21114 (April 16, 2020). If amendments were thought to be warranted, DOE requested comment on what method(s) would be appropriate for determining the delivery capacity of such models and what attributes can be used to distinguish these water heaters from non-flow activated water heaters more appropriately tested by the FHR test. *Id*. Rheem stated that there is a need to update the test procedure for testing delivery capacity of non-flow activated water heaters with low volume and high input rate. (Rheem, No. 14 at p. 9) DOE submitted a

comment on this issue to the March 2019 ASHRAE Draft 118.2, and a solution was proposed in the April 2021 ASHRAE Draft 118.2 in which the flow rate for water heaters with rated storage volumes less than 20 gallons would be 1.5 ±0.25 gpm (5.7 ±0.95 L/min) instead of the 1.0 ±0.25 gpm (3.8 ±0.95 L/min) currently specified in the consumer water heater test procedure. This change would allow a water heater that can run continuously *(i.e.*, low volume and high input rate) to have a FHR that would correspond to the high draw pattern. Further, lower capacity water heaters would not be able to continuously deliver hot water at 1.5 gpm, which would result in them continuing to be rated in a lower draw pattern.

DOE tested three electric storage water heaters with rated storage volumes below 20 gallons to the current DOE FHR test *(i.e.,* 1.0 ±0.25 gpm (3.8 ±0.95 L/min)) and a FHR test at a flow rate of 1.5 ±0.25 gpm (5.7 ±0.95 L/min). All three electric storage water heaters are rated in the very small draw pattern (*i.e.,* they have low input rates). The three electric storage water heaters were tested 4 times to each version of the FHR test (*i.e.,* 8 tests per unit and 24 tests total). The results of the tests are shown in Table III.1.

Table III.1 Average First-Hour Rating Based on a Flow Rate of 1.0 gpm and 1.5 gpm

Unit No.	Average FHR at 1.0 gpm (3.8 L/min), gallons	Average FHR at 1.5 gpm (5.7 L/min), gallons	Change, %
1	7.3	7.5	+3.4
2	6.4	6.2	-2.2
3	6.9	7.2	+4.7

As shown in Table III.1, changing the flow rate from 1.0 gpm to 1.5 gpm resulted in an average change in FHR between -2.2 percent and +4.7 percent. As the FHR rating did not increase above 10 gallons (*i.e.,* the threshold for determining whether to test to the very small or low draw patterns during the 24-hour simulated-use test) when tested at 1.5

gpm, the water heaters would continue to be tested to the very small draw pattern when tested to the 24-hour simulated-use test.

Based on the testing of the three models, changing the flow rate during the FHR test for water heaters with a rated storage volume less than 20 gallons from 1.0 ±0.25 gpm (3.8 ±0.95 L/min) to 1.5 ±0.25 gpm (5.7 ±0.95 L/min) would have a relatively minimal impact on the FHR for water heaters with low input rates, and the resultant FHR and associated draw pattern for the 24-hour simulated-use test would still be representative of the expected use in the field. However, for water heaters with high input rates the change in flow rate could significantly increase the FHR and result in some models being tested and rated for UEF using a higher draw pattern, which would provide ratings that are more representative of their actual use. For these reasons, DOE is proposing to change the flow rate during the FHR test for water heaters with a rated storage volume less than 20 gallons from 1.0 ±0.25 gpm (3.8 ±0.95 L/min) to 1.5 ±0.25 gpm (5.7 ±0.95 L/min). This proposed change is also consistent with the April 2021 ASHRAE Draft 118.2, and, in development of the final rule, DOE will consider the flow rate as finalized in the update to ASHRAE 118.2.

Initiation Criteria

The April 2021 ASHRAE Draft 118.2 includes additional criteria defining the start of the FHR test, as compared to DOE's test procedure. Section 5.3.3.3 of appendix E of the current DOE test procedure states that prior to the start of the FHR test, if the water heater is not operating (*i.e.*, heating water), initiate a draw until cut-in[27] (*i.e.*, when

[27] "Cut-in" is defined in section 1 of appendix E as "the time when or water temperature at which a water heater control or thermostat acts to increase the energy or fuel input to the heating elements, compressor, or burner."

the water heater begins heating water). The draw is then terminated any time after cut-in, and the water heater is operated until cut-out.[28] Once the maximum mean tank temperature is observed after cut-out, the initial draw of the FHR test begins. Section 7.3.3.3 of the April 2021 ASHRAE Draft 118.2 specifies that the draw preceding the initial draw of the FHR test must proceed until the outlet temperature drops 15 °F below the maximum outlet temperature observed, or until the draw time limit[29] is reached. If the draw time limit is reached before the outlet temperature drops 15 °F below the maximum outlet temperature observed, then the main heating source of the water heater is shut off and the draw is continued until the outlet temperature has dropped 15 °F below the maximum outlet temperature. Requiring the outlet temperature to drop 15 °F below the maximum outlet temperature may provide a more consistent starting condition for the FHR test compared to the pre-conditioning method specified in the current DOE test procedure because draws of varying lengths can create different internal tank temperature profiles. Thus, the additional requirement to tie the length of the initial draw to a specific outlet temperature, which in some cases would extend the draw length as compared to the current DOE test procedure, could increase the repeatability of the FHR test.

The March 2019 ASHRAE Draft 118.2 specified two criteria for terminating the water draw prior to the start of the FHR test: a 15 °F drop in outlet temperature from the maximum outlet temperature observed and a cut-in. The draft requirement for a cut-in was replaced with the draw time limit in the April 2021 ASHRAE Draft 118.2.

---

[28] "Cut-out" is defined in section 1 of appendix E as "the time when or water temperature at which a water heater control or thermostat acts to reduce to a minimum the energy or fuel input to the heating elements, compressor, or burner."

[29] The draw time limit is the rated storage capacity divided by the flow rate times 1.2 (*i.e.*, for a 75-gallon water heater the draw time limit would be 30 minutes, or 75 gallons divided by 3 gpm times 1.2).

In the April 2020 RFI, DOE requested feedback on whether the addition of an outlet temperature drop criterion for terminating the water draw prior to the start of the FHR test within the March 2019 ASHRAE Draft 118.2 is appropriate and/or necessary. 85 FR 21104, 21109 (April 16, 2020). If an outlet temperature drop criterion is appropriate, DOE requested comment and data on whether 15 °F is sufficiently representative, given consumer expectation, or whether a different threshold should be considered. *Id.* DOE also requested information on any potential impact to the testing burden that would result from an outlet temperature drop criterion. *Id.* Further, DOE requested comment on how to address water heaters that would not meet both initiation criteria (*i.e.*, both a cut-in and an outlet temperature drop) due to the ability to continuously deliver hot water at the prescribed test conditions. *Id.* AHRI generally agreed that the 15 °F drop is sufficiently representative. However, AHRI stated there are oil-fired water heaters available that cannot achieve this temperature drop. AHRI recommended that additional review and testing be done to determine how to address water heaters that would not meet both initiation criteria (*i.e.*, the 15 °F drop in outlet water temperature and a cut-in). (AHRI, No. 17 at p. 4) A.O. Smith, BWC, NEEA, Keltech, Rheem, and Rinnai agreed with AHRI's statements. (A. O. Smith, No. 20 at p. 2; BWC, No. 12 at p. 3; Keltech, No. 7 at p. 1; NEEA, No. 21 at p. 5; Rheem, No. 14 at p. 2; Rinnai, No. 13 at p. 3) CSA stated that it is part of a working group for ASHRAE Draft 118.2 to address this issue. (CSA, No. 10 at p. 2) NEEA stated that for water heaters with enough output capacity to never drop 15 °F, the FHR test is not necessary, and the water heater should be tested to the Max GPM test, even if the water heater is not technically flow-activated. (NEEA, No. 21 at p. 5)

The combination of the 15 °F drop in outlet water temperature and the draw time limit criteria to the start of the FHR test would provide a more repeatable pre-FHR draw,

as the criteria to end the draw would be explicitly stated (in contrast to the current test procedure, which allows for any length of pre-FHR test draw, as long as a cut-in occurs before the end of the draw). Because the pre-FHR test draw would be more repeatable, the available energy content of the tank at the start of the FHR test would be more consistent among different test runs. In both the current DOE test procedure and the procedure in the April 2021 ASHRAE Draft 118.2, the FHR test is initiated after a cut-out from the recovery that occurs due to the pre-FHR test draw. Therefore, in both cases, the water heater can be considered "fully heated" and to have similar internal energy content, although differences may be present due to the internal water temperature gradient throughout the tank. However, it is unclear how these differences in internal tank temperature will affect the test results. Absent information as to the impact of the differences in internal tank temperature on the test results, DOE is not proposing to amend appendix E to include the pre-FHR test conditioning proposed in the April 2021 ASHRAE Draft 118.2.

Additionally, in the April 2020 RFI, DOE raised concerns over high input rate water heaters that can heat water quicker than it is being drawn off. 85 FR 21104, 21113-21114 (April 16, 2020). The solution[30] presented in the April 2021 ASHRAE Draft 118.2 was the addition of a draw time limit, which eliminates the chances of an indefinite water draw. The procedure currently in appendix E[31] also would not allow an indefinite draw and, as stated previously, it is unclear the effect the draw time limit proposal would have on test results. Therefore, DOE is not proposing to include the draw time limit within appendix E.

---

[30] The draw time limit solution was the result of the working group in which CSA stated it was a part of. (CSA, No. 10 at p. 2)

[31] Appendix E requires that the pre-FHR test draw be terminated after the water heater initiates a recovery.

DOE agrees in principle with NEEA that the Max GPM test may provide a representative value of delivery capacity and could be used to determine the appropriate draw pattern of a water heater with a sufficiently high input rate and low storage volume, despite not being flow-activated. However, it is unclear at this time how these types of non-flow activated water heaters could be separated from other non-flow activated water heaters that are appropriately tested with the FHR test and would be inappropriately tested with the Max GPM test.

Minimum Outlet Temperature

Section 7.3.3.3 of the March 2019 ASHRAE Draft 118.2 and section 7.3.3.4 of the April 2021 ASHRAE Draft 118.2 include additional criteria regarding water draws during the FHR test, as compared to the current DOE test procedure. The FHR test required in section 5.3.3 of appendix E specifies a series of water draws over the course of one hour. After each water draw is initiated, the draw is terminated when the outlet water temperature decreases 15 °F from the maximum outlet water temperature measured during the draw. For example, if after initiating a water draw, the outlet water temperature reaches a maximum temperature of 125 °F, the water draw would continue until the outlet water temperature drops to 110 °F, at which time the water draw would be terminated. Section 7.3.3.4 of the April 2021 ASHRAE Draft 118.2 specifies that water draws during the FHR test terminate if either: (1) the outlet water temperature decreases 15 °F from the maximum outlet water temperature measured during the draw, or (2) the outlet water temperature decreases to 105 °F, regardless of the maximum outlet water temperature measured during the draw. Setting a minimum temperature threshold of 105 °F would reflect that in practice because consumers would likely stop drawing water when it gets below 105 °F, as the water would no longer be considered "hot."

In the April 2020 RFI, DOE requested feedback on whether the addition of a minimum outlet temperature as a criterion for terminating draws during the FHR test is appropriate and/or necessary. 85 FR 21104, 21109 (April 16, 2020). If a minimum outlet temperature criterion is appropriate, DOE requested comment and data on whether 105 °F would be sufficiently representative given consumer expectation, or whether a different threshold should be considered. *Id.* DOE also requested information on any potential impact this minimum outlet temperature may have on testing burden. *Id.* BWC and NEEA supported the minimum outlet temperature of 105 °F for terminating draws of the FHR test. (BWC, No. 12 at p. 2; NEEA, No. 21 at p. 5) Rheem supported a minimum outlet temperature, but suggested a 100 °F limit would be more appropriate and would better represent usable hot water temperatures, especially when considering electric water heaters used for point-of-use, such as handwashing applications. (Rheem, No. 14 at p. 3) AHRI and Rinnai stated that a 15 °F drop in outlet temperature or 105 °F minimum outlet temperature, whichever is higher, would be sufficiently representative. (AHRI, No. 17 at p. 4; Rinnai, No. 13 at p. 4) A.O. Smith and Rheem suggested more testing and investigation are necessary before any decisions are made. (A. O. Smith, No. 20 at p. 2; Rheem, No. 14 at p. 3) CSA stated that, when testing to the March 2019 ASHRAE Draft 118.2, all draws would be terminated at 105 °F regardless of outlet temperature, but stated that this can potentially create a bias for conducting the procedure at the higher end of 125 ±5 °F tolerance. CSA further stated that some water heaters start stacking[32] after the first draw, resulting in the outlet temperature going above 130 °F

[32] "Stacking" refers to when a storage water heater has hot water within the storage tank that is well above the temperature that is typically stored, which can result from successive short duration draws in a short amount of time. During typical operation, a draw removes hot water from the top of the storage tank, and the removed water is replaced with cold water that enters near the bottom the tank. The thermostat that controls the burner or element operation is also located near the bottom of the tank. Repeated short-duration draws result in multiple "bursts" of cold water entering the bottom of the tank; however, because the draws are short-duration, the total amount of water drawn is relatively small, and the temperature at the top of the tank may remain "hot" at the target setpoint. These short bursts of cold water entering near the thermostat may trigger a cut-in, and the water heater will begin heating despite the temperature at the top of the tank still being hot at the target setpoint. As the already-hot tank is being heated further, the temperature within the tank increases above the temperature that the water heater typical operates.

during the FHR test, and questioned how that would affect the overall FHR and draw pattern bin. (CSA, No. 10 at p. 2)

Based on a review of existing test data, the 105 °F outlet temperature criteria would affect only a small number of tests, if any. The test currently requires that the draw be terminated after a 15 °F drop in outlet temperature, and the outlet temperature is required to be between 120 °F and 130 °F when setting the thermostat. Therefore, the outlet temperature is unlikely to be below 105 °F during the test, as most draws should terminate before that point. The maximum outlet temperature of the draw would have to be below 120 °F for the 105 °F criteria to be triggered. As a result, DOE understands CSA's comment that all draws will be terminated at 105 °F, if tested to ASHRAE Draft 118.2, to be incorrect. Section 7.3.3.4 of the April 2021 ASHRAE Draft 118.2 includes a statement that requires the draw be terminated at 105 °F or when the outlet temperature is 15 °F below the maximum outlet temperature measured during the draw, "whichever is higher." Therefore, if the maximum outlet temperature of a draw was 125 °F, for example, then the draw would end after a 15 °F drop, or once the outlet water temperature is 110 °F, which is higher than 105 °F. Also, Rheem's suggestion of a 100 °F limit to address handwashing water heaters would not be appropriate for water heaters generally and would be more appropriately addressed as part of development of a method to appropriately test such water heaters (*see* section III.C.7). DOE is not proposing to add the 105 °F minimum outlet temperature criteria to the FHR test draw termination criteria, as further test data is needed to assess the effect on the FHR test results.

<u>Scaling of the Last Draw Volume</u>

Section 5.3.3.3 of appendix E includes a provision for the FHR test requiring that if the final draw is not initiated prior to one hour from the start of the test, then a final draw is imposed at the elapsed time of one hour. In this situation, calculations presented in section 6.1 of appendix E are used to determine the volume drawn during the final draw for purposes of calculating FHR. The volume of the final draw is scaled based on the temperature of the water delivered during the final draw as compared to the temperature of the water delivered during the previous draw. The calculated final draw volume is added to the total volume drawn during the prior draws to determine the FHR. The April 2021 ASHRAE Draft 118.2 does not include a final draw volume scaling calculation for the case in which a draw is not in progress at one hour from the start of the test and a final draw is imposed at the elapsed time of one hour. Instead, the April 2021 ASHRAE Draft 118.2 method calculates FHR as the sum of the volume of hot water delivered without any scaling of the final draw.

The methodology for conducting the FHR test, and in particular the issue of whether to scale the final draw, was considered by DOE in a final rule that was published on May 11, 1998 (May 1998 final rule). In the May 1998 final rule, DOE determined that scaling the final draw volume based on the outlet water temperature was appropriate and was included to adjust the volume of the last draw to account for the lower heat content of the last draw compared to the earlier draws with fully heated water. 63 FR 25996, 26004–26005 (May 11, 1998).

In the April 2020 RFI, DOE requested comment on whether the scaling of final draw volume should be maintained as part of the FHR calculation, in the case that a draw is not initiated prior to one hour from the start of the test but is imposed at that time before the water has been heated to the specified temperature to initiate the draw. 85 FR

21104, 21111 (April 16, 2020). DOE further requested feedback on the effect that removing the scaling of the final draw volume would have on the rated FHR, draw pattern, and rated UEF values of the various types of non-flow activated water heaters that are tested to the FHR test. *Id.* In response, AHRI, A.O. Smith, BWC, Rheem, Rinnai, and SMTI suggested that DOE remove the final draw volume scaling calculation, which would be consistent with the March 2019 ASHRAE Draft 118.2. (AHRI, No. 17 at p. 6; A.O. Smith, No. 20 at p. 3; BWC, No. 12 at p. 3; Rheem, No. 14 at p. 5; Rinnai, No. 13 at p. 6; SMTI, No. 19 at p. 3) AHRI, A.O. Smith, Rinnai, and Rheem further stated that removing the final draw volume scaling would have minimal impact on the rated FHR, draw pattern, and rated UEF values. (AHRI, No. 17 at p. 6; A.O. Smith, No. 20 at p. 3; Rinnai, No. 13 at p. 6; Rheem, No. 14 at p. 5) CSA stated that the current final draw volume scaling method should be maintained and that a water heater delivering water at 106 °F should not be equal to a water heater delivering water at 110 °F. According to CSA, the outlet water temperatures would most likely be tempered by the end user, and the water heater delivering 110 °F water would supply more tempered water than a water heater delivering 106 °F, even though the volume of the last draw, as measured, would be roughly the same. CSA stated further that removing the scaling of the final draw volume could possibly move water heaters to the next highest draw pattern. (CSA, No. 10 at p. 5)

The scaling of the final draw accounts for the possible lower heat content of the last draw as compared to earlier draws. The test procedure specifies a constant flow rate throughout testing. The flow rate is fixed, and, as water is drawn, the water temperature decreases. In practice, water used by the consumer is typically at a lower temperature than is delivered by the water heater (*i.e.*, water drawn from the water heater is mixed with water from the cold tap). The flow rate of water delivered to the consumer by a

faucet or showerhead is fixed by the faucet or showerhead. As the heat content of the water delivered by the water heater decreases, the flow rate of water from the water heater is increased to maintain the temperature of the mixed water delivered by the faucet or showerhead (*i.e.*, in practice, as water temperature decreases, the flow rate of water from the water heater is increased). Thus, DOE has tentatively determined that scaling the final draw volume based on outlet temperature is more representative of the actual use in the field.

Further, removing the scaling of the final draw volume would result in many FHR values having to be recertified as many models have the final draw imposed at the one-hour mark (only those models that initiated their final draw prior to 1 hour would not be affected). Because the change is to the calculation of FHR only, retesting would not be needed unless the resulting FHR value required a new 24-hour simulated-use test due to a change in the applicable draw pattern bin (*e.g.*, if the FHR increases such that a model moves from the medium to the high draw pattern). DOE agrees with commenters that most models would not require a new 24-hour simulated-use test. However, any retesting would be a burden on manufacturers and, as stated previously, removing the scaling provisions would result in a less representative test.

Removing or amending the scaling of the final draw volume would change the FHR value, which could change the required draw pattern to use for the simulated-use test, as defined in section 5.4.1 of appendix E. The current draw pattern thresholds were determined based on the current final draw scaling methodology, and are therefore representative of actual use only when used with FHR values based on the current final draw scaling methodology. Removing or amending the scaling of the final draw volume

could require adjusting the draw pattern thresholds to ensure that the applicable draw patterns (based on FHR value thresholds) remain representative of actual use.

The FHR metric is a method to compare the amount of usable water that a water heater can produce in a given amount of time. As long as the metric is applied consistently throughout the market, the consumer can use it to make comparisons among different models. Removing the scaling of the final draw volume may increase test burden on some manufacturers while resulting in a less representative test, and could require an update to the draw pattern thresholds. As described, changes to the draw pattern threshold could result in water heaters being classified in a lower draw pattern than they are currently, and it is uncertain as to the extent the reclassification would result in a test procedure that is representative for such models. Therefore, DOE has tentatively determined not to remove or amend the scaling of the final draw volume.

In response to the April 2020 RFI, SMTI stated that, if the scaling of the final draw volume was maintained, the equation should be amended to use the inlet water temperature as opposed to the minimum outlet temperature of the previous draw. According to SMTI, this change would make the overall calculation more representative of the energy availability in the final draw. (SMTI, No. 19 at p. 3-4) However, while basing the scaling calculation on inlet water temperature as opposed to outlet water temperature would be more representative of the energy availability in the tank, it would not be more representative of the energy availability in the final draw. The energy that is useful to the consumer is based on the energy of water delivered at a temperature at or above the consumer's desired temperature. The consumer's desired temperature is approximated in the FHR test by the minimum delivery temperature of the draw and not the inlet water temperature. Therefore, DOE has tentatively determined that scaling the

final draw volume based on the inlet water temperature would result in a less representative test and a metric that could mislead the consumer as to how much hot water they actually have available. Further, the change suggested by SMTI to base the scaling of the final draw volume on inlet water temperature would result in a FHR value that is higher than under the current DOE test procedure, but to a lesser degree than if the temperature scaling were removed. As stated, DOE has tentatively determined that amending scaling of the final draw volume to use the inlet water temperature as opposed to the minimum outlet water temperature would result in a less representative test and, therefore, DOE is not proposing this change.

d. 24-Hour Simulated-Use Test

Initiation Criteria

Similar to the initiation criteria discussed in section III.B.2.c for the FHR test, section 7.4.2 of the April 2021 ASHRAE Draft 118.2 includes criteria for a pre-24-hour simulated-use test draw, which ends after either the outlet temperature drops by 15 °F or the draw time limit is reached. Section 5.4.2 of appendix E currently requires that the water heater sit idle for 1 hour prior to the start of the 24-hour simulated-use test; during which time no water is drawn from the unit and no energy is input to the main heating elements, heat pump compressor, and/or burners. Appendix E provides no instruction on how to condition the tank prior to this one hour. However, as discussed in section III.B.2.c, it is unclear how the outlet temperature drop criteria and the draw time limit will affect the internal tank temperature at the start of the 24-hour simulated-use test and how this difference in internal tank temperatures will affect the test results. Therefore, DOE is not proposing to amend appendix E to include the preconditioning proposed in the April 2021 ASHRAE Draft 118.2. DOE welcomes data that provide information

regarding the impact of the preconditioning provisions in the April 2021 ASHRAE Draft 118.2 on the UEF result.

Recovery Efficiency

Section 8.3.2 of the March 2019 ASHRAE Draft 118.2 includes language specifying that, when the first recovery of the 24-hour simulated-use test ends during a draw, the first recovery period extends until the end of that draw. The first recovery period is used in section 8.3.2 of the March 2019 ASHRAE Draft 118.2 and section 6.3.2 of appendix E to calculate recovery efficiency. DOE's test procedure does not explicitly address how to calculate recovery efficiency if the first recovery period ends during a draw. A recovery period is defined in section 1 of appendix E as "the time when the main burner of a storage water heater is raising the temperature of the stored water." Each of the parameters in the recovery efficiency equation are recorded from the "beginning of the test to the end of the first recovery period following the first draw." The DOE test procedure does not explicitly state whether values are recorded at the end of the recovery period that ends after the initiation of the first draw, or at the end of a recovery period that occurs after the end of the first draw.

In the April 2020 RFI, DOE requested feedback on whether additional specification should be added to appendix E addressing the first recovery period ending during a draw. 85 FR 21104, 21111 (April 16, 2020). DOE further requested that if extending the first recovery period to the end of the draw is thought to be appropriate, whether the test procedure should also address the situation where a second recovery is initiated prior to the ending of the draw. *Id.* DOE also requested how to appropriately find the maximum mean tank temperature after cut-out following the recovery period. *Id.*

AHRI, A.O. Smith, CSA, Rheem, and Rinnai generally supported adding a specification in appendix E to address the first recovery period ending during a draw. (AHRI, No. 17 at p. 7; A.O. Smith, No. 20 at p. 3; CSA, No. 10 at p. 5; Rheem, No. 14 at p. 5; Rinnai, No. 13 at p. 7) AHRI, A.O. Smith, Rheem, and Rinnai supported extending the first recovery period to the end of the draw to include all water heater activity up to and including the end of the draw. (AHRI, No. 17 at p. 7; A.O. Smith, No. 20 at p. 3; Rheem, No. 14 at p. 5; Rinnai, No. 13 at p. 7) AHRI and Rheem recommended that the maximum mean tank temperature just after the first cut-out be used. (AHRI, No. 17 at p. 7; Rheem, No. 14 at p. 5) CSA recommended that for the other scenarios outlined by DOE, testing should be conducted to determine the proper procedure. (CSA, No. 10 at p. 5) No comments were received directly addressing the issue of when a second recovery starts prior to the end of the draw in which the first recovery ended.

The situation in which a recovery ends during a draw likely occurs during draws with a low enough flow rate that the water heater can heat water more quickly than the draw is removing. The energy used for the recovery efficiency calculation includes energy used to heat water and auxiliary energy; therefore, the energy associated with the first recovery period should represent the entire draw to capture all energy use. Commenters generally agreed that the maximum mean tank temperature measured after the recovery should be right after cut-out (*i.e.*, in the middle of the draw). After cut-out, as the draw continues, the mean tank temperature will drop as heated water is replaced by cold inlet water; therefore, the mean tank temperature immediately after cut-out will be the maximum observed. As such, DOE proposes to explicitly provide that when the first recovery ends during a draw, the first recovery period is extended to the end of the draw and the mean tank temperature measured immediately after cut-out is used as the maximum mean tank temperature value in the recovery efficiency calculation.

On January 31, 2020, DOE published a Notice of Decision and Order[33] (Decision and Order) by which a test procedure waiver for certain basic models was granted to address the issue of a second recovery initiating during the draw during which the first recovery ended. 85 FR 5648. The Decision and Order prescribes an alternate test procedure that extends the first recovery period to include both the first and second recoveries. *Id.* at 85 FR 5652. In the context of the Decision and Order, DOE determined that the consideration of delivered water mass and inlet and outlet temperatures until the end of the draw is appropriately representative, and, therefore, the entire energy used from both recoveries is included. *Id.* at 85 FR 5651-5652.

In the April 2020 RFI, DOE requested feedback on whether the equation for recovery efficiency for water heaters with a rated storage volume greater than or equal to 2 gallons (7.6 L) should be updated to address when the recovery period lasts for more than one draw. 85 FR 21104, 21111 (April 16, 2020). CSA, EEI, NEEA, Rheem, and Rinnai recommended that DOE update the recovery efficiency calculation to account for the period extending beyond one draw to increase clarity. (CSA, No. 10 at p. 5; EEI, No. 8 at p. 4; NEEA, No. 21 at p. 6; Rheem, No. 14 at p. 6; Rinnai, No. 13 at p. 7) This change was presented in the March 2019 ASHRAE Draft 118.2 and is in the Notice of Decision and Order. 85 FR 5648, 5652 (Jan. 31, 2020). Consistent with the published Notice of Decision and Order and as supported by commenters, DOE proposes to update the recovery efficiency equation to specify accounting for the mass of water drawn for all draws initiated during the recovery period. As such, DOE is proposing to amend appendix E consistent with the alternate test procedure in the Decision and Order.

---

[33] Notice of Decision and Order in response to BWC petition for waiver is available at: *www.regulations.gov/document?D=EERE-2019-BT-WAV-0020-0008*.

Standby Period

Appendix E includes a standby[34] period measured between the first and second draw clusters,[35] during which data is recorded that is used to calculate the standby heat loss coefficient. See section 5.4.2 of appendix E. Sections 7.4.2.1 and 7.4.2.2 of the March 2019 ASHRAE Draft 118.2 and sections 7.4.3.1 and 7.4.3.2 of the April 2021 ASHRAE Draft 118.2 add a condition that the standby period data can be recorded between the first and second draw clusters only if the time between the observed maximum mean tank temperatures after cut-out following the first draw cluster to the start of the second draw cluster is greater than or equal to 6 hours. Otherwise, the standby period data would be recorded after the last draw of the test. This condition would provide a sufficiently long standby period to determine standby loss, which might make this calculation more repeatable and the results more representative of standby losses experienced in an average period of use. However, this might also cause the test to extend beyond a 24-hour duration.

In the April 2020 RFI, DOE requested feedback on whether it should consider the addition of a minimum standby period length of 6 hours for use in the standby loss calculations, and on the appropriateness of recording this data after the final draw cluster when less than 6 hours of standby time occur between the first and second draw clusters. 85 FR 21104, 21110 (April 16, 2020). BWC stated that DOE should adopt a minimum standby period length of 6 hours for use in the standby loss calculation. (BWC, No. 12 at p. 3) NEEA stated that DOE should reduce the standby period to 4 hours, as it believed

[34] "Standby" is defined in section 1.12 of appendix E as "the time, in hours, during which water is not being withdrawn from the water heater."
[35] A "draw cluster" is defined in section 1 of appendix E as "a collection of water draws initiated during the 24-hour simulated-use test during which no successive draws are separated by more than 2 hours." There are two draw clusters in the very small draw pattern and three draw clusters in the low, medium, and high draw patterns.

the increased burden to require a 6-hour standby period would be unwarranted. (NEEA, No. 21 at p. 4) AHRI and Rheem stated they do not support the addition of a minimum standby period length of 6 hours because it would extend the total test period time to over 24 hours. (AHRI, No. 17 at p. 6; Rheem, No. 14 at p. 4) A.O. Smith stated that adding 6 hours to the test would be significant and recommended that DOE investigate whether the addition is truly necessary, or if a less burdensome method could achieve the same goal. (A.O. Smith, No. 20 at p. 3) CSA referenced its test data, which included units with a standby period ranging from 5 minutes to over 7 hours, to demonstrate that standby time has very little effect on the overall UEF value. (CSA, No. 10 at p. 4)

The standby heat loss coefficient (*i.e.*, UA) is calculated from data recorded during the standby period. DOE reviewed its available test data and found that for the models reviewed, UA has very little effect on UEF, which is consistent with CSA's comment. UA is used only to adjust the daily water heating energy consumption to the nominal ambient temperature of 67.5 °F (19.7 °C). Given that the ambient temperature range is relatively narrow (*i.e.,* 65 °F to 70 °F (18.3 °C to 21.1 °C)), the adjustment has only a minimal impact on the daily water heating energy consumption. Further, DOE found that the length of the recovery period has little effect on the resulting UA value. Therefore, DOE has tentatively determined that requiring a 6-hour standby period would not affect UA and UEF enough to justify the increased test burden associated with a test that already could last longer than 24 hours.

Last Hour

In the April 2020 RFI, DOE requested feedback on whether it should consider an alternate procedure, like that in section 7.4.2.2 of the March 2019 ASHRAE Draft 118.2

(and section 7.4.3.2 of the April 2021 ASHRAE Draft 118.2), for the last hour of the 24-hour simulated-use test. 85 FR 21104, 21111 (April 16, 2020). DOE further requested feedback on whether the addition of standby loss in the total energy use calculation adequately represents the auxiliary energy use that is not measured between the minute prior to the start of the recovery occurring between hours 23 and 24, and hour 24 of the 24-hour simulated-use test. *Id.*

CSA requested that DOE revisit the procedure for the last hour of the 24-hour simulated-use test. CSA raised a number of questions with how the test procedure in section 5.4.2, *Test Sequence for Water Heaters with Rated Storage Volumes Greater Than or Equal to 2 Gallons,* is implemented, specifically with regard to when power is to be turned off and on. (CSA, No. 10 at p. 4)

Although not stated explicitly in section 5.4.2 of appendix E, in the case that the standby period is between the first and second draw clusters, power to the main burner, heating element, or compressor is disabled during the last hour of the 24-hour simulated-use test. In the case that the standby period is after the last draw of the 24-hour simulated-use test, power to the main burner, heating element, or compressor is not disabled.

Section 5.4.2 of appendix E states that during the last hour of the 24-hour simulated-use test, power to the main burner, heating element, or compressor shall be disabled; at 24 hours, record the reading given by the gas meter, oil meter, and/or the electrical energy meter as appropriate; and determine the fossil fuel and/or electrical energy consumed during the entire 24-hour simulated-use test and designate the quantity as Q.

Section 5.4.2 of appendix E also provides that in the case that the standby period is after the last draw of the 24-hour simulated-use test, an 8-hour standby period is required, and this period may extend past hour 24. The procedures for the standby period after the last draw of the 24-hour simulated-use test allow for a recovery to occur at the end of the 8-hour standby period, which indicates that the power to the main burner, heating element, or compressor is not disabled. DOE's procedure as described may result in some confusion. Further, the method of determining the total energy use during the 24-hour simulated-use test, Q, and total test time are not explicitly stated for when a standby period occurs after the last draw of the 24-hour simulated-use test. As discussed in the following paragraphs, DOE is proposing to amend the procedures for the last hour of the 24-hour simulated-use test to explain how to end the test for both standby period scenarios.

CSA and NEEA stated that DOE should adopt the March 2019 ASHRAE Draft 118.2 approach. (CSA, No. 10 at p. 4; NEEA, No. 21 at p. 6)

In the March 2019 ASHRAE Draft 118.2 and April 2021 ASHRAE Draft 118.2, power is not disabled when the standby period occurs after the last draw of the test. But, if a recovery occurs between an elapsed time of 23 hours following the start of the test (hour 23) and 24 hours following the start of the test (hour 24), the following alternate approach is applied to determine the energy consumed during the 24-hour simulated-use test: the time, total energy used, and mean tank temperature are recorded at 1 minute prior to the start of the recovery occurring between hour 23 and hour 24, along with the average ambient temperature from 1 minute prior to the start of the recovery occurring between hour 23 and hour 24 to hour 24 of the 24-hour simulated-use test. These values are used to determine the total energy used by the water heater during the 24-hour

simulated-use test. This alternate calculation combines the total energy used 1 minute prior to the start of the recovery occurring between hours 23 and 24 and the standby loss experienced by the tank during the time between the minute prior to the recovery start and hour 24. This provision in section 7.4.2.2 of the March 2019 ASHRAE Draft 118.2 and section 7.4.3.2 of the April 2021 ASHRAE Draft 118.2 does not require the water heater to be de-energized during the standby period. Disabling power to the water heater is typically a manual operation that requires the presence of a technician. In cases where the technician does not disable power at the correct time, a retest of the 24-hour simulated-use test may be necessary. To the extent this draft provision would eliminate the need to ensure that a unit is switched off for the last hour of the 24-hour simulated-use test, it could reduce test burden.

In response to the April 2020 RFI, CSA further stated that not including the pilot energy does not adequately represent auxiliary energy usage for water heaters with continuously burning pilot lights. (CSA, No. 10 at p. 5) DOE notes that in the last hour of the 24-hour simulated-use test, the power to the main burner is disabled. In practice, cutting off the gas flow to the main burner disables the pilot light as well. However, disabling power to the main burner could also be accomplished by reducing the thermostat setting to the minimum setting available, which would result in the water heater under test not initiating a recovery during the last hour and gas continuing to be supplied to the pilot light. Reducing the thermostat setting would be a manual operation performed by a technician, not an automated action, which increases the chances of an invalid test. CSA also stated that water heaters without standing pilots will have minimal energy consumption in the last hour compared to the overall energy consumption, and that the total energy use calculation adequately represents the auxiliary energy use for these water heaters. *Id.* AHRI and A.O. Smith stated that they are in the process of

evaluating the March 2019 ASHRAE Draft 118.2 test procedure for the last hour of the 24-hour simulated-use test and will provide additional information after their evaluation is completed. (AHRI, No. 17 at p. 6; A.O. Smith, No. 20 at p. 3) Rheem stated that given the limited time for evaluation and testing of an alternate procedure, the current procedure for the last hour of the 24-hour simulated-use test in appendix E should be maintained. (Rheem, No. 14 at p. 5)

At this time, DOE has not been provided with the additional information from AHRI or A.O. Smith regarding the procedure for the last hour of the 24-hour simulated-use test, and agrees with Rheem that further evaluation of the alternate procedure presented in the March 2019 ASHRAE Draft 118.2 and April 2021 ASHRAE Draft 118.2 should be conducted before a determination is made. As stated previously, the procedure for the last hour of the 24-hour simulated-use test may benefit from further, more explicit instruction, and DOE proposes to explicitly state how to end the test depending on whether the standby period is between draw clusters 1 and 2 or after the last draw of the test.

C. Test Procedure Requirements

1. Commercial Water Heater Draw Pattern

In response to the April 2020 RFI, EEI suggested DOE consider a definition and test procedure for consumer water heaters used in commercial settings. EEI suggested that the test procedure would include a daily water draw (*i.e.*, draw pattern) that is greater than the "high" draw pattern, which is the draw pattern with the largest amount of delivered water in the test procedure for consumer water heaters. (EEI, No. 8 at p. 3)

DOE has tentatively determined not to add a draw pattern with a delivered volume greater than the high draw pattern in appendix E, which would represent consumer water heaters installed in commercial applications. Under 42 U.S.C. 6293(b)(3), in relevant part, any test procedures prescribed or amended shall be reasonably designed to produce test results which measure energy efficiency of a covered product during a representative average use cycle or period of use. Consumer water heaters are designed for use in residential applications and, as such, a draw pattern representative of a commercial installation would not be representative of the product's average use cycle or period of use.

2. Terminology

In sections 5.3.3.1 and 5.3.3.2 of appendix E, which describe general requirements and draw initiation criteria, respectively, for the FHR test, the term "storage-type water heaters" is used. However, the FHR test applies to all water heaters that are not flow-activated, which includes non-flow activated instantaneous water heaters. In the April 2020 RFI, DOE requested feedback on whether to update the phrase "storage-type water heaters" in section 5.3.3 to "non-flow activated water heaters." 85 FR 21104, 21112 (April 16, 2020). AHRI, Keltech, Rheem, and Rinnai stated that there is no need to change the phrase "storage-type water heaters" in section 5.3.3. (AHRI, No. 17 at p. 9; Keltech, No. 7 at p. 1; Rheem, No. 14 at p. 7; Rinnai, No. 13 at p. 9) AHRI stated that if instantaneous water heaters are properly classified, this issue would be resolved (AHRI, No. 17 at p. 9).

DOE submitted a comment to the March 2019 ASHRAE Draft 118.2 that suggested changing the language within sections 7.3.3.1 and 7.3.3.2 from "storage-type"

to "non-flow activated." This proposed change was accepted by the ASHRAE 118.2 committee and is present in section 7.3.3.1 of the April 2021 ASHRAE Draft 118.2. Section 7.3.3.2 was not included in the April 2021 ASHRAE Draft 118.2. In an effort to align terminology with that recognized by industry in proceedings subsequent to the April 2020 RFI, DOE proposes to change the phrase "storage-type" to "non-flow activated" within sections 5.3.3.1 and 5.3.3.2 of appendix E and further proposes to change "storage-type" and "instantaneous-type" to "non-flow activated" and "flow-activated," respectively, throughout appendix E. This change would be a clarification only and would not change the current application of sections 5.3.3.1 and 5.3.3.2 of appendix E.

In section 6.3.3 of appendix E, titled "Hourly Standby Losses," the descriptions for cumulative energy consumption ($Q_{su,0}$ and $Q_{su,f}$)[36] and mean tank temperature ($\overline{T}_{su,0}$ and $\overline{T}_{su,f}$,) at the start and end of the standby period, along with the elapsed time, average storage tank temperature, and average ambient temperature over the standby period ($\tau_{stby,1}$, $\overline{T}_{t,stby,1}$, and $\overline{T}_{a,stby,1}$, respectively)[37] specifically refer to the standby period that would occur after the first draw cluster, but do not explicitly address the case where the standby period occurs after the last draw of the test.

In the April 2020 RFI, DOE requested feedback on whether it should revise the descriptions of $Q_{su,0}$, $Q_{su,f}$, $\overline{T}_{su,0}$, $\overline{T}_{su,f}$, $\tau_{stby,1}$, $\overline{T}_{t,stby,1}$, and $\overline{T}_{a,stby,1}$ to explicitly include cases where the standby period occurs after the last draw of the test, in addition to cases where the standby period occurs after the first draw cluster. 85 FR 21104, 21113 (April 16, 2020). AHRI, A.O. Smith, CSA, and Rheem recommended not changing the descriptions. (AHRI, No. 17 at p. 10; A.O. Smith, No. 20 at p. 5; CSA, No. 10 at p. 8;

[36] The subscript "su,0" refers to the start of the standby period in which the standby loss coefficient is determined, and the subscript "su,f" refers to the end of this standby period.
[37] The subscript "stby,1" refers to the standby period in which the standby loss coefficient is determined. The subscripts "t" and "a" refer to the mean tank temperature and ambient temperature, respectively.

Rheem, No. 14 at p. 8) BWC observed inconsistences in definitions of the variables in the current test procedure in sections 1.13 and 6.3.3 and stated further that many of these can be addressed by adopting the descriptions in the March 2019 ASHRAE Draft 118.2. (BWC, No. 12 at p. 6)

Within appendix E, the standby loss period could occur at multiple points in the test, depending on the operation of the water heater under test, but, as described previously, the descriptions of these variables ($Q_{su,0}$, $Q_{su,f}$, $\overline{T}_{su,0}$, $\overline{T}_{su,f}$, $\tau_{stby,1}$, $\overline{T}_{t,stby,1}$, and $\overline{T}_{a,stby,1}$) reference only one of the possible time periods. Therefore, DOE proposes to remove references to specific time periods to reduce the possibility of confusion and to align with the April 2021 ASHRAE Draft 118.2.

3. Test Conditions

a. Supply Water Temperature

Section 2.3 of appendix E specifies maintaining the supply water temperature at 58 °F ±2 °F (14.4 °C ±1.1 °C). During the 24-hour simulated-use test, maintaining the supply water temperature within this range can be difficult at the immediate start of a draw due to the short time between draw initiation and the first measurement at 5 seconds (with subsequent measurements every 3 seconds thereafter), as required by sections 5.4.2 and 5.4.3 of appendix E. In some test configurations, particularly during the lower flow rate water draws, the inlet water and piping may retain heat from a previous draw, causing the water entering the unit during the initial measurements to be slightly outside of tolerance. Any supply water temperature reading outside of the test tolerances would invalidate a test. However, due to the small percentage of total water use that would be affected, supply water temperatures that are slightly out of tolerance for the first one or

two data points would have a negligible effect on the overall test result.[38] This issue is less evident during the FHR test, which specifies an initial temperature measurement 15 seconds after the start of the water draw. This is not an issue during the Max GPM test due to the system being in steady state during the entire test.

In the April 2020 RFI, DOE requested feedback on whether one or two supply water temperature data points outside of the test tolerance at the beginning of a draw would have a measurable effect on the results of the test. 85 FR 21104, 21111 (April 16, 2020). DOE further requested feedback on whether it should consider relaxing the requirement for supply water temperature tolerances at the start of a draw, and if so, which methods are most appropriate for doing so while maintaining accuracy and repeatability. *Id.* at 85 FR 21111-21112. A.O. Smith stated there would be no measurable effect on test results by allowing one or two supply water temperature data points outside of the test tolerance at the beginning of a draw. (A.O. Smith, No. 20 at p. 4) NEEA recommended DOE conduct a sensitivity analysis to determine a reasonable range and encouraged relaxing the requirements to ease test burden. (NEEA, No. 21 at p. 7) A.O. Smith, NEEA, and Rheem recommended that DOE allow the first one or two measurements of the supply water temperature to be outside of test tolerance to ease test burden. (A.O. Smith, No. 20 at p. 4; NEEA, No. 21 at p. 7; Rheem, No. 14 at p. 6) AHRI, A.O. Smith, BWC, CSA, Rheem, and Rinnai recommended that DOE increase the time between initiating a draw and the first data measurement from 5 seconds to 15 seconds within section 5.4.2 of appendix E. (AHRI, No. 17 at p. 7; A.O. Smith, No. 20 at p. 4; BWC, No. 12 at p. 3; CSA, No. 10 at p. 6; Rheem, No. 14 at p. 6; Rinnai, No. 13 at p. 8) SMTI recommended that the supply water temperature requirement be changed to:

[38] For example, the first two temperature readings would reflect 8 seconds of water flow, in comparison to total water draw durations ranging from 1 minute to over 8 minutes, according to the water draw patterns defined in Tables III.1, III.2, III.3, and III.4 of appendix E.

the average supply water temperature during draws shall be 58 °F ±2 °F, with all data points being 58 °F ±5 °F. (SMTI, No. 19 at p. 4) NEEA encouraged DOE to relax the tolerances at the start of the draw and suggested allowing a given maximum percentage deviation in mass-weighted temperature over the course of a single draw or to set a corresponding absolute number. (NEEA, No. 21 at p. 7) CSA recommended that DOE adopt the March 2019 ASHRAE Draft 118.2 piping diagrams, with the by-pass loop, to alleviate inlet temperature problems. (CSA, No. 10 at p. 6) DOE notes this supply water temperature issue has been observed in testing with the test setup described in the March 2019 ASHRAE Draft 118.2. Therefore, adopting the March 2019 ASHRAE Draft 118.2 test setup alone would not alleviate this issue.

As explained previously, DOE agrees with commenters that one or two supply water temperature measurements outside of tolerance at the start of the draw will likely have no measurable effect on test results. These outside of tolerance measurements typically occur during draws with lower flow rates, where the inlet water line (which has been heated slightly due to heat transferring from the water heater) is not cleared by the first data measurement. DOE notes that during its own testing, multiple retests were sometimes needed before a valid test was performed. To alleviate this issue, DOE proposes to increase the time between initiating the draw and first measurement from 5 seconds to 15 seconds in sections 5.4.2 and 5.4.3 of appendix E, as recommended by the commenters. This proposed change may reduce test burden by reducing the occurrence of a test being invalidated (which would require re-testing) due to the first one or two water temperature readings exceeding the defined temperature tolerance. Further, this proposed change would eliminate the need to amend the supply water temperature tolerances, which, outside of the time period at the start of a draw, are relatively easy to maintain.

b. Test Tolerances

Section 2.2 of appendix E specifies maintaining the ambient air temperature between 65.0 °F and 70.0 °F (18.3 °C and 21.1 °C) on a continuous basis for all types of consumer water heaters (and residential-duty commercial water heaters) other than heat pump water heaters. For heat pump water heaters, the dry bulb (ambient air) temperature must be maintained between 67.5 °F ±1 °F (19.7 °C ±0.6 °C), and the relative humidity must be maintained at 50% ±2% throughout the test. Appendix E does not specify a relative humidity tolerance for non-heat pump water heaters. For all water heaters, section 2.7.1 of appendix E specifies maintaining the electrical supply voltage within ±1% of the center of the voltage range specified by the manufacturer. Similar to the supply water temperature discussed previously, a brief measurement of air temperature, relative humidity, or electrical supply voltage that is only minimally outside of the test tolerance would invalidate a test, but likely would have a negligible effect on the results of the test, as the total time out of tolerance would be insignificant compared to the total time of the test. In the April 2020 RFI, DOE requested feedback on whether the tolerances for ambient air temperature, relative humidity, and electrical supply voltage are difficult to maintain at the start of a draw, and if so, whether DOE should consider relaxing these requirements at the start of a draw and to what extent. 85 FR 21104, 21112 (April 16, 2020).

AHRI recommended that the tolerances for the electric supply voltage be made less stringent and noted that the current electric supply voltage requirements require specialized equipment that is very costly and has little effect on the UEF results. (AHRI, No. 17 at p. 8) CSA, NEEA, Rheem, and Rinnai proposed increasing the electrical supply voltage tolerance to ± 2 percent of the rated voltage, while BWC proposed a

tolerance of ±5% of the rated voltage. (CSA, No. 10 at p. 6; NEEA, No. 21 at p. 3; Rheem, No. 14 at p. 6; Rinnai, No. 13 at p. 8; BWC, No. 12 at p. 4) CSA further stated that the electric supply voltage tolerance should apply only when the main heat source is on, as there are spikes in voltage when heating is turned on/off. (CSA, No. 10 at p. 6) Keltech stated that it might be difficult to maintain ±1 percent voltage tolerance, as there might be considerable voltage sag[39] for really high amperage units, and that the test procedure should be clearer about what is acceptable for a power supply source to recover. (Keltech, No. 7 at p. 1)

DOE agrees with commenters that maintaining the electric supply voltage within ±1 percent of the rated voltage is difficult and requires expensive equipment, and that maintaining this narrow tolerance range is likely not necessary to achieve repeatable and reproducible test results. DOE further agrees with CSA and Keltech that short spikes in the measured voltage that occur around the start and end of a recovery, when heating components are turning on or off, have little to no effect on UEF, but can invalidate a test. Therefore, to reduce the potential need to re-run tests and thereby potentially reduce test burden, DOE proposes to increase the electrical supply voltage tolerance from ±1 percent on a continuous basis to ±2 percent on a continuous basis and to add clarification that this tolerance is only applicable beginning 5 seconds after the start of a recovery to 5 seconds before the end of a recovery (*i.e.,* only when the water heaters is undergoing a recovery). These proposed changes may reduce test burden by reducing the need to re-run tests while maintaining the representativeness of the test procedure.

SMTI stated that for heat pump water heaters the average dry bulb temperature during recoveries should be 67.5 °F ±1 °F, with all data points being 67.5 °F ±5 °F, and

[39] A voltage sag (or swell) is a short duration change in voltage which can be caused by sudden load changes or excessive loads (*e.g.,* a water heater starting or ending a recovery).

that the average dry bulb temperature during standby period should be 67.5 °F ±2.5 °F, with all data points being 67.5 °F ±5 °F. (SMTI, No. 19 at p. 4) Rheem recommended a dry bulb temperature tolerance between 65.0 °F and 70.0 °F for heat pump water heaters. (Rheem, No. 14 at p. 6) Rinnai stated that the average ambient air temperature for non-heat pump water heaters should be 67.5 °F ±2.5 °F, and that a single data point outside of the range should not invalidate a test. (Rinnai, No. 13 at p. 8) A.O. Smith stated that relaxing ambient air tolerance for the first 15 minutes during the test will not have a measurable effect on the overall test results and that DOE should investigate whether relaxing this tolerance for the entirety of the test still provides results that are repeatable and representative of an average use cycle.. (A.O. Smith, No. 20 at p. 4)

Through a review of its available test data, DOE has found that short fluctuations in ambient temperature have little to no effect on the test results of non-heat pump water heaters. Therefore, in an effort to reduce the need to re-run tests in instances in which the results of the invalid test and the valid test would not differ significantly, and therefore reduce test burden, DOE proposes to change the ambient temperature requirement for non-heat pump water heaters to an average of 67.5 °F ±2.5 °F, with a maximum deviation of 67.5 °F ±5 °F, as opposed to only a maximum deviation of 67.5 °F ±2.5 °F as currently specified in the test procedure.

For heat pump water heaters, DOE agrees with SMTI that the dry bulb temperature tolerances are important to maintain during recoveries but are less important during standby periods when the air is not being used to heat water. Further, through its own testing, DOE has observed that short deviations outside of the dry bulb temperature tolerances have little to no effect on the test results. Therefore, in an effort to reduce the need to re-run tests in instances in which the results of the invalid test and the valid test

would not differ significantly, DOE proposes to change the dry bulb temperature requirement for heat pump water heaters to an average of 67.5 °F ±1 °F during recoveries and an average of 67.5 °F ±2.5 °F when not recovering, with a maximum deviation of 67.5 °F ±5 °F, as opposed to only a maximum deviation of 67.5 °F ±1 °F as currently specified in the test procedure. This proposed change would maintain the stringency of the dry bulb temperature requirement while allowing for short deviations from the targeted dry bulb temperature range, which would reduce the need to re-run tests in instances in which the results of the invalid test and the valid test would not differ significantly, and therefore reduce test burden.

In response to the April 2020 RFI, SMTI stated that for heat pump water heaters, the relative humidity tolerance is only relevant during recoveries and suggested changing the relative humidity requirements to an average of 50% ±2%, with a maximum deviation of 50% ±10%. (SMTI, No. 19 at p. 4) A.O. Smith stated that relaxing relative humidity tolerance for the first 15 minutes during the test will not have a measurable effect on the overall test results and that DOE should investigate whether relaxing this tolerance for the entirety of the test still provides results that are repeatable and representative of an average use cycle. (A.O. Smith, No. 20 at p. 4) BWC and Rinnai supported relaxing the relative humidity tolerance, and NEEA stated that the relative humidity tolerance should be increased from ±2 percent to ±5 percent. (BWC, No. 12 at p. 4; Rinnai, No. 13 at p. 8; NEEA, No. 21 at p. 4)

For heat pump water heaters, DOE is proposing to increase the absolute relative humidity tolerance from ±2 percent to ±5 percent across the entire test, with the average relative humidity between 50% ±2% during recoveries. This change would reduce test

burden by reducing the need to re-run tests in instances in which the results of the invalid test and the valid test would not differ significantly.

As noted, appendix E does not currently specify a relative humidity tolerance for non-heat pump water heaters. As described in the April 2020 RFI, DOE has conducted exploratory testing to investigate the effect of relative humidity on the measured UEF values of two consumer gas-fired instantaneous water heaters that are flow activated and have less than 2 gallons of storage volume. 85 FR 21104, 21112 (April 16, 2020). Of the two models tested, one used non-condensing technology and the other used condensing technology. For each model, two tests were performed at a relative humidity of 50 percent, and two tests were performed at a relative humidity of 80 percent (*i.e.,* a total of four tests for each model). *Id.* Increasing in relative humidity from 50 percent to 80 percent resulted in a maximum change in UEF for the non-condensing and condensing models of 0.011 and 0.015, respectively. *Id.* Given that DOE requires reporting UEF to the nearest 0.01 (*see* 10 CFR 429.17(b)(2)), a change in UEF on the order of 0.01-0.02 as suggested by DOE's test results could be considered as substantively impacting the test results. DOE is still examining this issue and requests comment and test data on whether a relative humidity requirement should be added to appendix E for non-heat pump water heaters.

DOE is also proposing a clarification regarding the correction of the heating value to a standard temperature and pressure. Section 3.7 of appendix E states that the heating values of natural gas and propane must be corrected from those reported at standard temperature and pressure conditions to provide the heating value at the temperature and pressure measured at the fuel meter, but does not specify standard temperature and pressure conditions.

AHRI maintains an Operations Manual for Residential Water Heater Certification Program (AHRI Operations Manual),[40] which addresses how testing will be done in the AHRI certification program. The procedures outlined in the AHRI Operations Manual are similar to appendix E and provide instruction for AHRI certification program testing that is not included within the DOE test procedure. In section A1.4.1 of the AHRI Operations Manual, an equation is provided that corrects the measured heating value, when using a dry gas[41] and a wet test meter,[42] to the heating value at the standard temperature and pressure of 60 °F (15.6 °C) and 30 inches of mercury column (101.6 kPa), respectively. Annex B of the March 2019 ASHRAE Draft 118.2 also provides a method for correcting the heating value from measured to standard conditions, which allows for the use of either dry or saturated gas[43] and either a dry[44] or wet test meter. Sections 2.4.1 and 3.1.1 of appendix O to part 430 correct the input rate to the standard conditions of 60 °F (15.6 °C) and 30 inches of mercury column (101.6 kPa). Therefore, to align with the AHRI Operations Manual and the current practice in other appendices with part 430 of the CFR, DOE is proposing to explicitly state that the standard temperature and pressure conditions for gas measurements be 60 °F (15.6 °C) and 30 inches of mercury column (101.6 kPa), respectively. Further, to detail the method in which the heating value must be corrected to standard conditions and to align with the consensus industry standard, DOE proposes to reference Annex B of a finalized ASHRAE 118.2.

c. Gas Pressure

---

[40] The AHRI Operations Manual for Residential Water Heater Certification Program is available at: *www.ahrinet.org/App_Content/ahri/files/Certification/OM%20pdfs/RWH_OM.pdf.*
[41] Dry gas refers to non-saturated test gas that does not contain water vapor.
[42] A wet test meter measures the heating value of saturated test gas that contains water vapor.
[43] Saturated gas refers to test gas that contains water vapor.
[44] A dry test meter measures the heating value of dry test gas.

For gas-fired water heaters, sections 2.7.2 and 2.7.3 of appendix E require maintaining the gas supply pressure in accordance with the manufacturer's specifications; or if the supply pressure is not specified, maintaining a supply pressure of 7 to 10 inches of water column (1.7 to 2.5 kPa) for natural gas and 11 to 13 inches of water column (2.7 to 3.2 kPa) for propane gas. In addition, for gas-fired water heaters with a pressure regulator, sections 2.7.2 and 2.7.3 require the regulator outlet pressure to be within ±10 percent of the manufacturer's specified manifold pressure. From a review of product literature, DOE has found that many gas-fired water heaters with modulating input rate burners have a factory preset manifold pressure that is computer-controlled and cannot be adjusted directly. Further, the manufacturer-specified manifold pressure typically refers to when the water heater is operating at the maximum firing rate.

In the April 2020 RFI, DOE requested comment on whether sections 2.7.2 and 2.7.3 (Test Conditions for Natural and Propane Gas, respectively) should be amended to account for models where the manifold pressure cannot be adjusted directly and whether the ±10% tolerance on the manufacturer's specified manifold pressure should apply only when firing at the manufacturer specified maximum input rate. 85 FR 21104, 21112 (April 16, 2020). AHRI, CSA, Rheem, and Rinnai recommended that an alternate tolerance based on percentages be used when a "zero-governor" valve[45] is used. (AHRI, No. 17 at p. 8; CSA, No. 10 at p. 7; Rheem, No. 14 at p. 7; Rinnai, No. 13 at p. 9) Rheem commented that the ±10 percent tolerance should apply when operating at the manufacturer's specified firing rate, and that for modulating water heaters the ±10 percent tolerance should be applied to the maximum firing rate. (Rheem, No. 14 at p. 7) A.O. Smith and CSA suggested that sections 2.7.2 and 2.7.3 be amended to account for

[45] A zero-governor valve controls the outlet pressure of the valve to a target of near-zero inches of water column (*i.e.*, zero pressure).

manifold pressure that cannot be adjusted directly, and specifically recommended that if the target manifold pressure cannot be achieved through manifold adjustment, then modifying the orifice should be required. (A.O. Smith, No. 20 at p. 4; CSA, No. 10 at p. 7)

Recognizing that certain gas-fired water heaters do not provide the capability to adjust the manifold pressure, DOE proposes to remove the ±10 percent manifold pressure tolerance for these products. DOE is proposing to add an absolute manifold pressure tolerance of ±0.2 inches water column, which would be used for gas-fired water heaters with a zero-governor valve for which the ±10 percent tolerance would be overly restrictive. For example, applying the ±10 percent to a manufacturer recommended gas pressure of 0.1 inches water column would result in a tolerance of ±0.01 inches of water column, which is less than both the accuracy and precision tolerances required for gas pressure instrumentation within section 3.1 of appendix E. Further, DOE proposes that the required gas pressures within appendix E apply when operating at the manufacturer's specified input rate or, for modulating input rate water heaters, the maximum input rate. Section III.C.3.d of this document provides further discussion on modifying the orifice of gas-fired water heaters that are not operating at the manufacturer specified input rate.

d. Input rate

In addition to the gas pressure requirements, section 5.2.3 requires maintaining an hourly Btu rating (*i.e.,* input rate) that is within ±2 percent of the value specified by the manufacturer (*i.e.,* the nameplate value). DOE has observed during testing that an input rate cannot be achieved that is within ±2 percent of the nameplate value while maintaining the gas supply pressure and manifold pressure within the required ranges for

some gas-fired water heaters. In such instances, it is common practice for the testing laboratory to modify the size of the orifice that is shipped with the water heater; for example, the testing laboratory may enlarge the orifice to allow enough gas flow to achieve the nameplate input rating within the specified tolerance, if the input rate is too low with the orifice as supplied. For commercial water heating equipment, DOE addressed this issue by specifying in the product-specific enforcement provisions that, if the fuel input rate is still not within ±2 percent of the rated input after adjusting the manifold and supply pressures to their specified limits, DOE will attempt to modify the gas inlet orifice. 10 CFR 429.134(n)(ii).

In the April 2020 RFI, DOE requested comment on whether provisions should be added to the test procedure at appendix E to address water heaters that cannot operate within ±2 percent of the nameplate rated input as shipped from the factory. 85 FR 21104, 21112 (April 16, 2020). If so, DOE requested comment on how to address this issue, and whether it is appropriate to physically modify the orifice, similar to the direction for commercial water heaters. *Id.* AHRI, Rheem, and Rinnai recommended using the test procedure in the AHRI Operations Manual for Residential Water Heater Certification Program, which specifies procedures to adjust the test setup when the appliance's input rate is not within the ±2 percent of the specified input rate either by adjusting the manifold pressure, modifying the orifice of the unit, or checking/fixing any leaks. (AHRI, No. 17 at p. 8; Rheem, No. 14 at p. 7; Rinnai, No. 13 at p. 9) BWC stated that DOE should add provisions to address products that cannot operate within ±2 percent of the nameplate input rate, potentially by allowing manufacturers to provide testing facilities with alternate means to achieve the rated input, such as modifying the orifice(s) while the regulator outlet pressure is within ±10 percent of the manufacturer's specified manifold pressure. (BWC, No. 12 at p. 4) CEC recommended that DOE review, study,

and provide results to stakeholders before allowing laboratories to make any physical modification to the size of the gas flow orifice to increase or decrease gas flow to achieve the nameplate input rating within the specified tolerance, further stating that this modification should be made by the manufacturer prior to testing, since this will lead to false efficiency readings that are not representative of actual use and could negatively impact the consumers ability to choose an efficient water heater. (CEC, No. 11 at p. 4)

After considering these comments, DOE proposes to add provisions to appendix E to provide further direction for achieving an input rate that is ± 2 percent of the nameplate value specified by the manufacturer. Specifically, DOE proposes to modify section 5.2.3 of appendix E to require that the following steps be taken to achieve an input rate that is ± 2 percent of the nameplate value specified by the manufacturer. First, attempt to increase or decrease the gas outlet pressure within ± 10 percent of the value specified on the nameplate to achieve the nameplate input (within ±2 percent). If the fuel input rate is still not within ±2 percent of the nameplate input, increase or decrease the gas supply pressure within the range specified on the nameplate. If the measured fuel input rate is still not within ±2 percent of the certified rated input, modify the gas inlet orifice as required to achieve a fuel input rate that is ± 2 percent of the nameplate input rate. Regarding commenters' suggestion to check for leaks as an additional step in the process, DOE notes that gas leak detection should be part of a test laboratory's normal operating procedures and, therefore, detection does not require specification within DOE's test procedures. In response to CEC's concern regarding representativeness, the purpose of adjusting the orifice during testing is to ensure that the performance of the water heater is representative of performance at the Btu rating specified by the manufacturer on the product's nameplate, which informs the field installation conditions. Allowing for adjustment of the orifice reduces test burden and improves repeatability by providing test

laboratories with a last resort to maintain the hourly Btu rating as specified by the manufacturer. Further, DOE is proposing that modification of the orifice be done only after other options have been exhausted.

DOE seeks further comment on its proposed amendments to clarify the procedure for achieving an input rate within ±2 percent of the nameplate input rating.

DOE also proposes to add enforcement specific provisions to 10 CFR 429.134 to require that if the fuel input rate still cannot be achieved within ±2 percent of the nameplate input rate after adjusting the burner as described above, the fuel input rate found via testing will be used for the purpose of determining compliance. DOE proposes similar provisions for oil-fired water heaters that cannot be adjusted to within ±2 percent of the nameplate value. DOE requests comment on this proposal.

e. Optional Test Conditions

In response to the April 2020 RFI, NEEA requested that DOE allow for optional reporting of additional efficiency ratings at two different ambient and inlet water temperature conditions within the Compliance Certification Management System (CCMS) database, specifically for heat pump water heaters. NEEA further recommended that testing and reporting of the lower compressor cut off temperature in the CCMS database, similar to NEEA's Advanced Water Heating Specification, be required. (NEEA, No. 21 at pp. 1-3) The Joint Advocates requested that DOE explore the usage of NEEA's Advanced Water Heating Specification and allowing for voluntary testing needed to calculate climate-specific efficiency. (Joint Advocates, No. 15 at pp. 1-2)

DOE recognizes that regional differences in ambient temperature, inlet water temperature, and relative humidity exist and that these differences can have an effect on the efficiency of heat pump water heaters. However, as required under EPCA, the DOE test procedure must be reasonably designed to produce test results which measure energy efficiency during a representative average use cycle or period of use. (42 U.S.C. 6293(b)(3)) Compliance with the applicable energy conservation standard, which was developed based on an analysis of water heaters nationally, must be determined using the current DOE test procedure. (42 U.S.C. 6295(s)). The conditions in appendix E are representative of the nation as a whole. Moreover, DOE does not have data to indicate what conditions would be representative for regional representations. As the test procedure must be representative of the nation as a whole, and as DOE has no data to indicate what conditions would be representative for regional representations, DOE has tentatively determined not to allow for optional reporting of additional efficiency ratings at test conditions other than those found in the DOE test procedure.

4. Mixing Valve

Through a review of product literature, DOE has found consumer water heaters on the market that are designed to, or have operational modes that, raise the temperature of the stored water significantly above the outlet water temperature requirements specified in section 2.4 of appendix E (*i.e.,* 125 °F ±5 °F (51.7 °C ±2.8 °C)). These water heaters are meant to be installed with a mixing valve, which may or may not be provided with, or built into, the unit, to temper the outlet water to a typical outlet water temperature. Generally, raising the temperature of the water in the storage tank significantly above the target output temperature (*i.e.,* "over-heating" the water) without the presence of a mixing valve would effectively increase the amount of hot water that a given size water

heater can deliver (*e.g.,* a 50 gallon water heater with an over-heated storage tank temperature could provide the same amount of hot water as an 80 gallon water heater with a more typical storage tank temperature). An FHR test performed at an over-heated storage tank temperature would result in a higher FHR than a test performed at a lower, more typical storage tank temperature. The installation instructions in section 4 of appendix E do not address when a separate mixing valve should be installed, and the operational mode selection instructions in section 5.1 of appendix E do not specifically address when the water heater has an operational mode that can over-heat the water in the storage tank. However, section 5.1 of appendix E requires that the water heater be tested in its default mode, and where a default mode is not specified, to test the unit in all modes and rate the unit using the results of the most energy-intensive mode.

The ENERGY STAR program published a Test Method to Validate Demand Response[46] for connected residential water heaters on April 5, 2021 (ENERGY STAR Connected Test Method). Section 4.1 of the ENERGY STAR Connected Test Method, which was developed with input from industry, addresses the test setup in which a separate mixing valve is required. This setup requires the installing the mixing valve in accordance with the water heater and mixing valve manufacturer's instructions. Absent instruction from the water heater or mixing valve manufacturer, the mixing valve is to be installed in the outlet water line, upstream of the outlet water temperature measurement location, with the cold water supplied from a tee installed in the inlet water line, downstream of the inlet water temperature measurement location (*i.e.,* the mixing valve and cold water tee are installed within the inlet and outlet water temperature measurement locations). Section 4.1 of the ENERGY STAR Connected Test Method

[46] The Energy Star Test Method to Validate Demand Response for Connected Residential Water Heaters is available at: *www.energystar.gov/sites/default/files/ENERGY%20STAR%20Connected%20Residential%20Water%20Heaters%20Test%20Method%20to%20Validate%20Demand%20Response_0.pdf.*

further clarifies that if the liquid flow rate and/or mass measuring instrumentation is installed on the outlet side of the water heater, that it shall be installed after the mixing valve.

To accommodate water heaters that are designed to, or have operational modes that, raise the temperature of the stored water significantly above the outlet water temperature requirements specified in section 2.4 of appendix E, DOE proposes to add instructions for the installation of a mixing valve similar to what is published in section 4.1 of the ENERGY STAR Connected Test Method.

5. Mass Measurements

In appendix E, both section 6.3.2, which provides for the computation of the recovery efficiency for gas, oil, and heat pump storage-type water heaters, and section 6.4.1, which provides for computation of the recovery efficiency for water heaters with rated storage volume less than 2 gallons, specify that the total mass of water removed (*i.e.,* mass of water that flows through the outlet) from the start of the 24-hour simulated-use test to the end of the first recovery period (M_1) is used to calculate recovery efficiency. The test procedure accommodates determining the total mass either directly (*e.g.,* through the use of a weighing scale), or indirectly by multiplying the total volume removed (V_1) (*i.e.,* total volume of hot water flow through the outlet) by the density of water (ρ_1) as determined based on the water temperature at the point where the flow volume is measured.[47]

[47] Although the DOE test procedure does not specify how to measure and/or calculate density, it is typically calculated using either a regression equation or density tables based on a specific temperature and pressure.

a. Flow Meter Location

The current test procedure does not specify where in the flow path the flow volume and density must be measured, which allows for laboratory test setups that measure the flow volume either on the cold inlet side of the water heater or on the hot outlet side. Allowing the flow meter to be located on either the inlet or outlet side, and calculating the mass of the water that is heated during the test based on the density of the water where the flow meter is located, could result in differences in the mass of water that is calculated depending on whether the flow meter is in the inlet water line or the outlet water line. Because the inlet water is colder than at the outlet, it is also denser, meaning that the same volume of water has more mass at the inlet than the outlet. In addition, some of the mass of inlet water could, after being heated, expand out of the water heater into the expansion tank and be purged prior to a draw.[48] Any "expanded" volume of water that is lost through the by-pass (purge) line could be included in a volume measurement taken at the inlet, but not be included in a volume measurement taken at the outlet.

In the April 2020 RFI, DOE requested feedback on whether the consumer water heater test procedure should require measurement of flow in the outlet water line to ensure that the mass of water removed from the tank is accurate. 85 FR 21104, 21113 (April 16, 2020). DOE further requested comment on whether requiring the density, ρ_1, to be determined based on the outlet temperature, rather than the temperature where the flow volume is measured, would alleviate this issue. *Id*. AHRI disagreed with requiring measurement of flow in the outlet water line and recommended that measurements be allowed on the inlet to ensure greater long-term reliability of the volume or mass flow

[48] The change in volume occurs because water expands and increases in volume as it is heated.

measurement device used. (AHRI, No. 17 at p. 9) Rheem and Rinnai opposed requiring measurement of flow in the outlet water line, as they believe it is more consistent to measure the inlet. (Rheem, No. 14 at pp. 7-8; Rinnai, No. 13 at p. 10) BWC stated that DOE should continue to allow manufacturers and laboratories to maintain the option of placing a water meter as part of the inlet water piping. (BWC, No. 12 at p. 5) CSA and Keltech stated that flow rate should be measured at the outlet, not the inlet of a water heater. (CSA, No. 10 at p. 7; Keltech, No. 7 at p. 1) CSA also stated that measuring water based on mass would work and would give the best results since mass is measured directly and temperature measurements are not needed; however, CSA noted this would require the use of a mass flow meter. CSA stated that for labs that do not have a mass flow meter and instead use volume flow meters like a magnetic flow meter, the location of the temperature sensor to determine the density needs to be specified. (CSA, No. 10 at p. 7)

DOE conducted exploratory testing to evaluate the effect on the test results due to differences in recording the water delivered using a flow meter at the inlet and outlet of the water heater, compared to the mass delivered as measured with a scale. The mass delivered was measured directly using Coriolis flow meters and these values were compared to the mass measured by the scale. The three different mass values were used to determine the UEF and the results are shown in Table III.2. Table III.2 shows the measured mass of each draw of the 24-hour simulated-use test, the root-mean-square deviation[49] (RMSD) of the mass measurements, and the resulting UEF values for each mass measurement method used in the calculations. DOE's preliminary testing indicates that more accurate measurements of the mass of water delivered are obtained at the outlet

[49] RMSD is the square root of the average of squared deviations, or differences, between the mass measured by the inlet or outlet flow meter and the outlet scale. By using RMSD, any "negative" differences are converted to "positive," which provides a more meaningful basis for calculating the average deviation from the reference.

flow meter as compared to the inlet flow meter. The difference in UEF between the outlet flow meter and the scale method was 0.002 and 0.016 for gas-fired storage and instantaneous water heaters, respectively; whereas the difference in UEF between the inlet flow meter and the scale method was 0.023 and 0.029 for gas-fired storage and instantaneous water heaters, respectively.

Table III.2 Test Results Using Mass Measured by Inlet and Outlet Flow Meters and an Outlet Scale

Water Heater Description	Gas-fired Storage Water Heater			Gas-fired Instantaneous Water Heater		
Mass Determination Method	**Inlet Flow Meter**	**Outlet Flow Meter**	**Outlet Scale**	**Inlet Flow Meter**	**Outlet Flow Meter**	**Outlet Scale**
Resulting UEF	0.641	0.620	0.618	0.820	0.807	0.791
RMSD, lbs	1.97	0.39	N/A	2.67	2.10	N/A
Draw	**lbs**	**lbs**	**Lbs**	**Lbs**	**lbs**	**lbs**
1	222.5	218.7	218.3	223.2	222.0	214.5
2	16.3	15.6	15.0	16.1	15.6	13.9
3	8.2	7.7	7.1	7.9	7.7	7.1
4	74.1	72.2	72.3	74.5	73.0	72.8
5	124.9	122.2	121.7	123.4	122.2	121.5
6	41.0	39.6	39.9	41.2	40.8	40.3
7	8.0	7.1	7.1	8.0	7.1	6.6
8	8.1	7.4	7.3	7.7	7.4	6.6
9	8.1	7.3	7.1	8.4	8.0	7.5
10	16.3	15.7	15.7	16.4	16.0	15.2
11	16.4	15.3	15.2	16.7	16.2	16.1
12	16.4	14.7	15.0	16.3	15.5	15.7
13	16.7	15.3	15.4	17.1	16.3	16.3
14	115.5	111.5	112.2	115.8	113.8	113.5

The trend from DOE's preliminary test results is consistent with CSA and Keltech's comments. However, at this time, the preliminary testing is not sufficient for DOE to propose requiring the measurement of the mass or volume water at the outlet or at the inlet of the water heater. DOE's preliminary results are based on testing only one unit each of a gas-fired storage water heater and a gas-fired instantaneous water heater. It is not clear that measurements for all water heaters would demonstrate a similar impact based on the location of the measurement at the outlet versus inlet of the water heater. From DOE's testing using third party laboratories, most, if not all, tests are conducted with a flow meter installed on the inlet side of the water heater. To require water flow to

be measured at the outlet may require consumer water heaters on the market to be retested without a complete understanding of the impact of the change in measurement location. Therefore, DOE requests test data comparing the results of testing with flow meters installed at the inlet or outlet of the water heater.

b. Mass Calculation

In sections 6.3.5 and 6.4.2 of appendix E, the mass withdrawn from each draw (M_i) is used to calculate the daily energy consumption of the heated water at the measured average temperature rise across the water heater (Q_{HW}). However, neither section includes a description of how to calculate the mass withdrawn for tests in which the mass is indirectly determined using density and volume measurements.

In the April 2020 RFI, DOE requested feedback on whether to update the consumer water heater test procedure to include a description of how to calculate the mass withdrawn from each draw in cases where mass is indirectly determined using density and volume measurements. 85 FR 21104, 21113 (April 16, 2020). AHRI recommended including a description of how to calculate the mass withdrawn from each draw where mass is indirectly determined by using one of the calculations from the AHRI Operations Manual for Residential Water Heater Certification Program. (AHRI, No. 17 at p. 9) A.O. Smith, Rheem, and Rinnai supported the use of the method recommended by AHRI. (A.O. Smith, No. 20 at p. 4; Rheem, No. 14 at p. 8; Rinnai, No. 13 at p. 10) BWC stated that DOE should update the federal test procedure to include a means to calculate the mass withdrawn from each draw in cases where mass removed is determined using ratio of the inlet and outlet densities and volume measured on the inlet. (BWC, No. 12 at p. 5) Keltech stated that DOE does not need to specify the means to

collect mass or volume measurements and that DOE should only specify the accuracy and tolerance of mass, volume, or temperature measurements. (Keltech, No. 7 at p. 1)

DOE is proposing to specify how mass calculations are made when the mass is indirectly determined using density and volume measurements. Specifically, DOE proposes that the volume at the outlet would be multiplied by the density, which would be based on the average outlet temperature measured during the draw. DOE is also proposing to add procedures similar to those in the AHRI Operations Manual for Residential Water Heater Certification Program; in particular, a method of converting inlet water volume to outlet water volume using the ratio of the water densities at the inlet and outlet.[50] In response to Keltech's comment, DOE is not proposing to specify the means to collect mass or volume measurements. Rather, DOE is specifying how to calculate outlet water volume and mass regardless of the means used to collect mass or volume measurements.

6. Very Small Draw Pattern Flow Rate

Section 5.4.1 of appendix E states that if the Max GPM is less than 1.7 gpm (6.4 L/min) that the very small draw pattern be used during the 24-hour simulated-use test. Section 5.5 of appendix E states that, for the very small draw pattern, if the water heater has a Max GPM rating less than 1 gpm (3.8 L/min), then all draws shall be implemented at a flow rate equal to the rated Max GPM. DOE has identified flow-activated water heaters that are designed to deliver water at the set point temperature of 125 °F ±5 °F (51.7 °C ±2.8 °C) that is required by section 2.5 of appendix E at a flow rate well below 1

[50] The AHRI Operations Manual for Residential Water Heater Certification Program specifies that the outlet water volume is equal to the inlet water volume times the inlet water density divided by the outlet water density.

gpm (3.8 L/min). For these products, draw 2 of the very small draw pattern requires 1 gallon to be removed at the rated Max GPM and the pattern requires draw 3 to start five minutes after draw 2 initiation. However, any rated Max GPM less than or equal to 0.2 gpm (0.76 L/min) will result in draw 2 lasting more than five minutes and past the start time of draw 3. To clarify the appropriate method of testing these products, DOE proposes to amend the very small draw pattern description to state that when a draw extends beyond the start time of a subsequent draw, that the subsequent draw will start after the required volume of the previous draw has been delivered.

7. Low Temperature Water Heaters

DOE has identified flow-activated water heaters that are designed to deliver water at a temperature below the set point temperature of 125 °F ±5 °F (51.7 °C ±2.8 °C) that is required by section 2.5 of appendix E. These water heating products are typically marketed as "handwashing" or "POU water" heaters. These units typically have low heating rates, which requires the testing agency to reduce the flow rate in order to be able to achieve the outlet temperature within the set point temperature range. However, these units have a minimum activation flow rate below which the unit shuts off. To the extent that a unit would stop heating water when the flow rate is too low, there may be no flow rate at which the unit would operate and deliver water at the outlet temperature required under section 2.5 of appendix E.

In the April 2020 RFI, DOE requested feedback on whether language should be added to section 5.2.2.1 of appendix E, titled, "Flow-Activated Water Heaters, including certain instantaneous water heaters and certain storage-type water heaters," to allow for water heaters not designed to deliver water at 125 °F ±5 °F (51.7 °C ±2.8 °C) to be tested

at a lower set point temperature, or whether other changes to the test method need to be made to accommodate these types of models (*e.g.,* an additional draw pattern, product definition). 85 FR 21104, 21113 (Apr. 16, 2020). AHRI, A.O. Smith, CSA, EEI, Keltech, and Rheem recommended that the test procedure be modified to include a lower set point temperature to accommodate products that are not designed to deliver water at 125 °F ±5 °F. (AHRI, No. 17 at p. 11; A.O. Smith, No. 20 at p. 5; CSA, No. 10 at p. 8; EEI, No. 8 at p. 4; Keltech, No. 7 at p. 1; Rheem, No. 14 at p. 9) A.O. Smith further recommended that any alternative provisions require testing at the maximum water temperature delivery that the model is capable of delivering. (A.O. Smith, No. 20 at p. 5) CSA and Rheem added that most of these heaters are specialized, as some are only used for handwashing or point-of-use applications, so they do not need to go through a typical DOE draw pattern. (CSA, No. 10 at p. 8; Rheem, No. 14 at p. 9)

Water heaters that provide water at a maximum temperature lower than 125 °F (*i.e.*, "low temperature" water heaters) are consumer water heaters. To the extent that a "low temperature" water heater uses electricity as the energy source, has a nameplate input rating of 12 kW or less, and contains no more than one gallon of water per 4,000 Btu per hour of input, it would be an electric instantaneous water heater. 10 CFR 430.2. The definition of water heater or electric instantaneous water heater does not include a minimum water delivery temperature. As stated, "low temperature" water heaters cannot be tested under the current DOE test procedure. To the extent that a consumer water heater is not able to heat water to the required set point temperature, the manufacturer would be required to petition DOE for a waiver from the DOE test procedure and request use of an alternate test procedure pursuant to the procedure at 10 CFR 430.27.

Although DOE has not received any such petitions, to minimize the potential need for manufacturers to petition for a test procedure waiver, DOE is proposing to define "low temperature" water heaters and to establish test procedure provisions that specify a lower set point temperature for such products. DOE is proposing to define a "low temperature water heater" as "an electric instantaneous water heater that, is not a circulating water heater and, cannot deliver water at a temperature greater than or equal to the set point temperature specified in section 2.5 of appendix E to subpart B of this part when supplied with water at the supply water temperature specified in section 2.3 of appendix E to subpart B of this part."

DOE has tentatively determined that lowering the set point temperature for "low temperature" water heaters to their maximum possible delivery temperature would permit these water heaters to be tested appropriately and in a manner that would produce representative test results. Therefore, DOE proposes to require low temperature water heaters to be tested to their maximum possible delivery temperature.

As stated previously, if a consumer water heater exists that is not able to heat water to the required set point temperature, the manufacturer would be required to petition DOE for a waiver from the DOE test procedure and request use of an alternate test procedure pursuant to the procedure at 10 CFR 430.27. If a manufacturer produces a consumer water heater that is not able to heat water to the required set point temperature but does not meet the definition of a "low temperature water heater" as proposed in this document, the manufacturer should petition DOE for a waiver for that model.

8. Heat Pump Water Heater Heaters

a. Controls

As discussed in section III.A.1.a, in the present market, a consumer heat pump water heater typically consists of an air-source heat pump and a storage tank that are integrated together into one assembly. This "typical" consumer heat pump water heater uses electricity and has backup resistance elements within the storage tank. Heating water with the heat pump components is more efficient than heating water with the backup resistance elements. Therefore, water heaters with controls that prioritize heat pump water heating over resistance element water heating will operate more efficiently than water heaters that do not prioritize heat pump water heating or that do not prioritize heat pump water heating to the same extent.

In response to the April 2020 RFI, the Joint Advocates suggested modifying the test procedure to reflect the effectiveness of controls in minimizing use of the resistance element in heat pump water heaters, stating this modification would improve the representativeness of the test procedure and create new incentives for manufacturers to develop products that provide increased savings for consumers. (Joint Advocates, No. 15 at p. 2) No suggestion was provided on how to better reflect the use of controls to minimize element usage.

DOE's test data shows that for most (or possibly all) heat pump water heater models available on the market currently, electric elements do not turn on during the 24-hour simulated-use test. Although element usage during the test could be forced through a more aggressive draw pattern (*i.e.*, longer or more frequent draws designed to deplete the water heater and require more hot water than the heat pump alone could keep up with), the draw patterns are required to be representative of actual use. Therefore, designing the draw pattern with the goal of forcing resistance element use would not be

representative of typical use, and DOE has tentatively determined not to modify the test procedure to activate the use of electric resistance elements in heat pump water heaters during testing.

b. Split-System Heat Pump Water Heaters

In response to the April 2020 RFI, the Joint Advocates and NEEA recommended that DOE investigate the inclusion of niche products, such as split system heat pumps, within appendix E. (Joint Advocates, No. 15 at p. 3; NEEA, No. 21 at p. 3) In a split system heat pump, the heat pump part of the system is typically installed outdoors. The storage tank part of the system is typically installed indoors and does not use the ambient air for water heating directly. As discussed in section III.C.3.b, different ambient conditions are specified in appendix E for heat pump water heaters and non-heat pump water heaters. For split system heat pump water heaters, DOE is proposing to specify that the heat pump part of the system shall be tested using the heat pump water heater dry bulb temperature and relative humidity requirements, while the storage tank part of the system shall be tested using the non-heat pump water heater ambient temperature and relative humidity requirements. DOE notes that the required non-heat pump water heater ambient conditions can be met by keeping the entire system within the dry bulb temperature and relative humidity requirements for heat pump water heaters (*i.e.,* both parts of the system can be tested in the same psychrometric chamber).

c. Heat Pump Only Water Heaters

As discussed in section III.A.1.a, certain heat pump water heaters are sold that consist of only a heat pump (*i.e.,* heat pump only water heater). These heat pump only water heaters require the use of a separate storage tank to properly operate. The current

DOE test procedure does not have procedures in place to appropriately test these water heaters.

In a final rule published October 17, 1990, DOE established test procedures that included a description of how to test heat pump water heaters sold without a storage tank. 55 FR 42162, 42173. These procedures were updated in the May 1998 final rule and included testing the heat pump water heater with an electric storage water heater having a measured volume of 47 gallons ±1.0 gallons (178 liters ±3.8 liters); two 4.5 kW heating elements controlled in such a manner as to prevent both elements from operating simultaneously; and a rated efficiency at or near the minimum energy conservation standard. 63 FR 25996, 26011 (May 11, 1998).

DOE published the April 2010 final rule based on an evaluation of heat pump only water heaters available on the market. 75 FR 20112 (April 16, 2010). DOE determined such water heaters do not meet EPCA's definition of a "water heater" and are not covered products. *Id.* at 75 FR 20127. The products that provided the basis for DOE's determination were characterized as add-on heat pump water heaters. *Id.* In a NOPR that preceded the April 2010 final rule, DOE stated that add-on heat pump water heaters are typically marketed and used as an add-on component to a separately manufactured, fully functioning electric storage water heater. 74 FR 65852, 65865 (Dec. 11, 2009). DOE further stated that the add-on unit consists of a small pump and a heat pump system. *Id.* In the products considered by DOE, the pump circulates refrigerant from the water heater storage tank through the heat pump system and back into the tank, while the heat pump extracts heat from the surrounding air and transfers it to the refrigerant. *Id.* The add-on units evaluated for DOE's determination cannot by themselves provide hot water on demand, but rather heat water only when operated in

conjunction with a storage water heater. *Id.* DOE also stated that manufacturers do not ship add-on heat pump water heaters as self-contained, fully functioning water heaters or paired with a storage tank, and that the add-on device, by itself, is not capable of heating water and lacks much of the equipment necessary to operate as a water heater. *Id.* The test procedures addressing heat pump water heaters that are sold without a storage tank were removed in the July 2014 final rule, due to the previous determination that add-on heat pump water heaters are not covered products. 79 FR 40542, 40547 (July 11, 2014).

A review of the current market has identified certain heat pump only water heaters that operate differently than the add-on heat pump water heaters that were examined during the April 2010 final rule. Certain heat pump only water heaters are used in conjunction with a separately sold unfired hot water storage tank or backup storage water heater and extract "cold" water from the tank, heat the water directly using the ambient air as the heat source, and return water at a slightly higher temperature to the storage tank or backup heater. In contrast to the add-on heat pump water heaters previously examined in the April 2010 Final Rule, these heat pump only water heaters heat water directly. Currently, testing these heat pump only water heaters to appendix E is not possible because they are unable to heat water to the required set point temperature on demand. These products require the use of a separately sold storage tank and gradually increase the temperature of the stored water to the required outlet temperature.

Because of the differences with certain heat pump only water heaters currently on the market as compared to the add-on heat pump water heaters that provided the basis for DOE's prior determination, DOE has tentatively determined that certain heat pump only water heaters are covered products. As discussed in section III.A.1.a, DOE is proposing

a definition for "circulating water heater," which covers heat pump only water heaters, and that procedures to test these products should be included in appendix E.

As stated previously, a 47-gallon electric storage water heater that uses electric resistance elements and that has a rated efficiency at or near the minimum energy conservation standard was previously required when testing the test procedures prior to the July 2014 final rule. Consistent with DOE's prior approach to testing heat pump only water heaters, DOE is proposing testing with a standard storage tank. Through testing of integrated heat pump water heaters,[51] DOE has observed that the electric resistance elements do not turn on during the 24-hour simulated-use test. Therefore, DOE is not proposing to require backup heating (*i.e.,* electric resistance elements) within the standard storage tank, as the backup heating would likely not operate during the test. DOE reviewed the CCMS database for unfired hot water storage tanks[52] and found that several manufacturers produce 80-gallon unfired hot water storage tanks, while no manufacturers produce a 47-gallon unfired hot water storage tank. DOE is proposing that the storage tank to be used with a heat pump only water heater would be an 80 gallon ±1 gallon unfired hot water storage tank that meets the energy conservation standards for an unfired hot water storage tank at 10 CFR 431.110(a).[53] DOE requests comment on the approach of using a standard storage tank for testing heat pump only water heaters and whether there are other procedures that are not burdensome to conduct and that are representative of actual use.

---

[51] Integrated heat pump water heaters are discussed in section III.C.8.a and represent the "typical" heat pump water heater available on the market, in which the storage tank and heat pump are combined (integrated) into one assembly. The integrated heat pump water heaters on the market typically have electric resistance elements installed in the tank for supplementary heating when the heat pump alone cannot provide enough hot water. The residential application of an integrated heat pump water heater and a heat pump only water heater combined with a separately sold storage tank are similar.
[52] The CCMS database for unfired hot water storage tanks is available at: *www.regulations.doe.gov/certification-data/#q=Product_Group_s%3A**.
[53] Currently unfired hot water storage tanks must have a minimum thermal insulation of R-12.5.

Were DOE to establish a test procedure for heat pump only water heaters, such water heaters would not be subject to energy conservation standards until such a time that DOE addressed such products in an energy conservation standard rulemaking.

9. Circulating Gas-Fired Water Heaters

As described in section III.A.1.c, several manufacturers produce "circulating" consumer gas-fired instantaneous water heaters that are designed to be used with a volume of stored water (usually in a tank, but sometimes within a recirculating hot water system of sufficient volume, such as a hydronic space heating or designated hot water system) in which the water heater does not directly provide hot water to fixtures, such as a faucet or shower head, but rather replenishes heat lost from the tank or system through hot water draws or standby losses. In section III.A.1.c, DOE tentatively determined that these water heaters are "covered products" under the "water heater" definition and proposed a definition for "circulating water heaters" to be included at 10 CFR 430.2.

In the April 2020 RFI, DOE requested feedback on what changes to the consumer water heater test procedure may be necessary to appropriately test circulating gas-fired instantaneous water heaters. DOE also requested feedback on whether there is an industry standard that would allow for testing of circulating gas-fired instantaneous water heaters that would provide results representative of the energy use of these products for an average use cycle or period of use. 85 FR 21104, 21113 (April 16, 2020). AHRI, Rinnai, and Rheem recommended using DOE's commercial water heater test procedure, which references parts of ANSI Z21.10.3-2015/CSA 4.3-2015 (ANSI Z21.10.3-2015), "Gas-fired water heaters, volume III, storage water heaters with input ratings above 75,000 Btu per hour, circulating and instantaneous." (AHRI, No. 17 at p. 11; Rheem, No.

14 at p. 8; Rinnai, No. 13 at p. 10-11) Additionally, AHRI suggested that if DOE declines to modify the definition and retains circulating gas-fired instantaneous water heaters within scope of this test procedure, then DOE should consider adopting the thermal efficiency commercial test procedure and metric for these products. (AHRI, No. 17 at p. 11)

As stated previously in section III.A.1.c, DOE has tentatively determined that circulating water heaters are consumer water heaters and would be covered by DOE's test procedures for consumer water heaters. Congress, through 42 U.S.C. 6295(e)(5)(B), directed DOE to establish a "uniform efficiency descriptor" as the required metric for consumer water heaters. This "uniform efficiency descriptor" was established during the July 2014 final rule and is the UEF metric. DOE may exclude a specific category of covered water heaters from the uniform energy descriptor established by DOE if DOE determines that the category of water heaters does not have a residential use and can be clearly described in the final rule, and is effectively rated using the thermal efficiency and standby loss descriptors applied to the category as of December 18, 2012, as a commercial water heater. 42 U.S.C. 6295(e)(5)(F) As stated previously, DOE has tentatively determined that circulating water heaters have a residential use. As such, to the extent that circulating water heaters are consumer water heaters, they would be subject to an energy conservation standard using the UEF metric.

Similar to heat pump only water heaters described in section III.C.8.c, circulating water heaters operate with a separate storage tank. Therefore, DOE has tentatively determined that, as proposed for heat pump only water heaters, circulating water heaters would be tested with an 80 gallon ± 1 gallon unfired hot water storage tank that meets the energy conservation standards for an unfired hot water storage tank at 10 CFR

431.110(a). DOE requests comment on the approach of using a standard storage tank for testing circulating water heaters and whether there are other procedures that are not unduly burdensome to conduct and that are representative of actual use.

10. Solar Water Heaters

In response to an RFI published on May 21, 2020 (May 2020 RFI), regarding the energy conservation standards for consumer water heaters (85 FR 30853), the Solar Rating & Certification Corporation ("(SRCC")) recommended that solar water heating technologies be considered for inclusion in the DOE energy conservation standards and test procedures for consumer water heaters. SRCC stated that without the involvement of DOE, the industry metrics struggle to gain acceptance with policymakers and consumers. SRCC also stated that DOE rulemakings to include solar-equipped water heaters in regulations would serve to establish a single performance metric and signal the legitimacy of solar water heating technologies. (Docket: EERE–2017–BT–STD–0019, SRCC, No. 11 at pp. 3-4) On October 7, 2020, SRCC published a draft test procedure titled, "Solar Uniform Energy Factor Procedure for Solar Water Heating Systems."[54] The draft SRCC test procedure addresses methods to test different types of solar water heaters.

On April 8, 2015, DOE published an energy conservation standards NOPR addressing definitions for consumer water heaters. 80 FR 18784. In particular, DOE proposed definitions for "solar-assisted fossil fuel storage water heater" and "solar-assisted electric storage water heater" and clarified that water heaters meeting these

[54] SRCC's draft Solar Uniform Energy Factor Procedure for Solar Water Heating Systems is available at at: *www.iccsafe.org/wp-content/uploads/is_stsc/Solar-UEF-Specification-for-Rating-Solar-Water-Heating-Systems-20201012.pdf.*

definitions are not subject to the amended energy conservation standards for consumer water heaters established by the April 2010 final rule. *Id.* at 80 FR 18789. DOE has tentatively determined to address solar water heaters in a separate rulemaking.

11. Connected Water Heaters

On September 17, 2018, DOE published an RFI seeking information on the emerging smart technology appliance and equipment market. 83 FR 46886 (September 2018 RFI). In the September 2018 RFI, DOE sought information to better understand market trends and issues in the emerging market for appliances and commercial equipment that incorporate smart technology. *Id.* at 83 FR 46887. DOE's intent in issuing the September 2018 RFI was to ensure that DOE did not inadvertently impede such innovation in fulfilling its statutory obligations in setting efficiency standards for covered products and equipment. *Id.* In the April 2020 RFI, DOE sought comment on the same issues presented in the September 2018 RFI as they may be applicable to consumer water heaters.

EEI stated that DOE should update the test procedure to better capture the performance difference between traditional and "smart" water heaters by including subcategories for non-connected,[55] connected,[56] and disconnected water heaters;[57] and provided recommended definitions for these categories. EEI further stated that during

---

[55] EEI proposed to define non-connected water heaters as traditional water heaters that do not have "smart" features and cannot connect to any external network or device.
[56] EEI proposed to define connected water heaters as "smart" water heaters (that are not already categorized as grid-enabled water heaters) that connect to smart home networks and/or smart devices (home assistant speakers, smart phones, etc.) and/or external networks such those provided by a local energy company.
[57] EEI proposed to define disconnected water heaters (for test procedures only) as "smart" water heaters (that are not already categorized as grid-enabled water heaters) that have the ability to disconnect from smart home networks and/or smart devices (home assistant speakers, smart phones, etc.) and/or external networks based on user command or as a "default" mode if it detects problems with the communication network.

testing, "connected" water heaters should be disconnected from their external networks so that their UEF values can be compared on an equivalent basis with "non-connected" water heaters. (EEI, No. 8 at p. 2) NEEA commented that DOE should allow optional reporting of demand response[58] capability in CCMS. (NEEA, No. 21 at pp. 2-3) Similarly, in the May 2020 RFI, SRCC recommended that DOE consider adding a thermal energy storage[59] metric to the current test method. SRCC stated that in its simplest form, the metric could simply involve the calculation of the energy contained in water heated from the entering water temperature to the maximum operating temperature for the tank. According to SRCC, the metric could be accomplished using no additional testing and could help to spur the use of thermal energy storage and demand response in the context of consumer and commercial storage water heaters and unfired tanks. (Docket: EERE–2017–BT– STD–0019, SRCC, No. 11 at p. 5-6)

Section 5.1 of appendix E specifies the operational mode selection for water heaters, but does not explicitly address "smart" or "connected" modes of operation. For water heaters that allow for multiple user-selected operational modes, all procedures specified in appendix E must be carried out with the water heater in the same operational mode (*i.e.,* only one mode). Section 5.1 of appendix E. This operational mode must be the default mode (or similarly named, suggested mode for normal operation) as defined by the manufacturer in its product literature for giving selection guidance to the consumer. *Id.*

---

[58] Demand response refers to changes in electric or gas usage from the normal consumption patterns in response to changes in the price of electricity or gas over time, or to incentive payments designed to induce lower electricity or gas use at times of high wholesale market prices or when system reliability is jeopardized.

[59] Thermal energy storage is important to demand response programs, as the water that is heated during off-peak times must be kept heated and ready for use when the consumer desires hot water.

DOE is proposing to explicitly state that any connection to an external network or control would be disconnected during testing. While DOE recognizes that connected water heaters are on the market with varying implementations of connected features, DOE is not aware of any data available, nor did interested parties provide any such data, regarding the consumer use of connected features. Absent such data, DOE is unable to develop a representative test configuration for assessing the energy consumption of connected functionality for water heaters.

Furthermore, while acknowledging the potential benefits that could be provided by connected capability, such as providing energy saving benefits to consumers and enabling peak load shifting on the grid, DOE believes that requiring measurement of the energy consumed by connected features at this time may prematurely hinder the development and incorporation of such features in water heaters. While grid management programs have existed for many years, demand response capability is rapidly evolving. Therefore, DOE has tentatively determined that, at this time, any regulation on its part to address these products may harm the evolution of this market.

DOE acknowledges that storage-type water heaters are useful thermal energy storage devices that can help save consumers money and help utilities manage the grid by heating up the water in the tank during non-peak times. However, the technology required to operate within a demand response program is not available on most consumer water heaters and the available thermal energy of the tank can be determined using the already available rated storage volume metric. Further, DOE notes that a thermal energy storage metric would be most useful to utilities operating demand response programs. These utilities are regionally located and can therefore make better assumptions about water heating conditions, such as supply water temperature and ambient temperature, as

compared to a national average of these conditions, which are used in the DOE test procedure. Therefore, DOE has tentatively determined not to add a thermal energy storage metric to the DOE test procedure at this time.

As DOE is not proposing test procedures specific to connected water heaters, separate definitions would not be needed to identify non-connected, connected, and disconnected water heaters.

12. Drain Down Test Method

Section 4.5 of appendix E provides the procedure for measuring the internal storage tank temperature for water heaters with a rated storage volume at or above 2 gallons. Section 4.5 of appendix E specifies that the thermocouples be inserted into the storage tank of a water heater through either the anodic device opening, the temperature and pressure relief valve, or the outlet water line. DOE has identified consumer water heaters with physical attributes that make measuring internal storage tank temperature difficult, such as water heaters that have a built-in mixing valve and no anodic device, or have a large heat exchanger that does not accommodate insertion of a thermocouple tree.

In the April 2020 RFI, DOE requested comment on whether amendments to the water heater test procedure are needed to address water heaters that cannot have their internal storage tank temperatures measured as required by the test procedure. 85 FR 21104, 21114 (April 16, 2020). In response, CA IOUs recommended that DOE not amend the test procedure to address water heaters for which it is impossible to measure internal storage tank temperatures. (CA IOUs, No. 18 at p. 4) Rheem stated its support of such amendments and recommended a drain down method, whereby the entire volume would be removed and the temperature measured at the end of the 24-hour test. (Rheem,

No. 14 at p. 9) BWC agreed such amendments were necessary and suggested a framework for a procedure to address water heaters that cannot have their internal storage tank temperatures measured that would involve: (1) after the FHR test, purging the water heater with inlet water at 58 °F ±2 °F to establish the mean tank temperature at the beginning of the 24-hour simulated-use test; (2) allowing the water heater to heat up to the original thermostat setting and recording the energy used to do so; (3) running the appropriate draw pattern, then fully draining the water heater by gravity, while measuring the mass and temperature of the water; and (4) calculating the energy change as: energy change = mass × specific heat × the difference between the average end temperature and the beginning temperature just after the 58 °F purge. (BWC, No. 12 at p. 5)

Throughout the 24-hour simulated-use test, internal tank thermocouples are used to determine the mean tank temperature. Mean tank temperatures are required at the start and end of the test, the start and end of the standby period, and the after the first recovery period (*i.e.,* $\overline{T}_0$, $\overline{T}_{24}$, $\overline{T}_{su,0}$, $\overline{T}_{su,f}$, and $\overline{T}_{max,1}$, respectively). Also, an average mean tank temperature throughout the standby period is required (*i.e.,* $\overline{T}_{t,stby,1}$). The procedures recommended by BWC and Rheem could provide an estimate of the mean tank temperature at the start and end of the 24-hour simulated-use test but would not provide an estimate at the end of the first recovery period, the start and end of the standby period, or an average over the standby period. To provide for determining the mean tank temperature at each required stage, DOE proposes an amended version of the procedure suggested by BWC. DOE is proposing the following procedure for water heaters that cannot accommodate a thermocouple tree:

1. Allow the water heater to finish any recovery it is undergoing.

2. Wait 1 hour, during which time the water heater sits idle without any water draws or energy used for heating water.

3. Begin the first draw of the appropriate draw pattern. Record the inlet and outlet water temperatures 5 seconds after the initiation of the first draw. The mean tank temperature at the start of the test, $\overline{T}0$, is the average of the inlet and outlet temperature measurements.

4. At the end of the first draw, record the inlet and outlet water temperatures. The maximum mean tank temperature after the first recovery period, $\overline{T}max,1$, is the average of the inlet and outlet temperature measurements.

5. Continue with the appropriate draw pattern.

6. At the end of the last draw of the first draw cluster, record the inlet and outlet water temperatures. The mean tank temperature after the start of the standby period, $\overline{T}su,0$, is the average of the inlet and outlet temperature measurements.

7. Continue with the appropriate draw pattern.

8. Begin the first draw of the second draw cluster. Record the inlet and outlet water temperatures 5 seconds after the initiation of the first draw. The mean tank temperature at the end of the standby period, $\overline{T}su,f$, is the average of the inlet and outlet temperature measurements.

9. The average mean tank temperature over the standby period, $\overline{T}t,stby,1$, is the average of mean tank temperatures at the start and end of the standby period.

10. Continue with the appropriate draw pattern.

11. At hour 24, initiate a draw at the flow rate of the first draw of the draw pattern that the water heater was tested. The mean tank temperature at hour 24 ($\overline{T}24$) is the average of the inlet and outlet water temperatures measured 5 seconds after the start of the draw.

The proposed drain down test would estimate the mean tank temperature based on the inlet and outlet water temperature at the start or end of the draw. This assumes that the temperature of the stored water gradually (*i.e*. linearly) increases in temperature either from the bottom of the tank to the top, or the further the water is into the heat exchanger from the water inlet, depending on the design of the water heater being tested. As the exact internal dimensions of the storage tank or heat exchanger in relation to the location of the heat source cannot be known for every water heater, the linear assumption is the most representative of the water heater market as a whole.

13. Alternate Order 24-Hour Simulated-Use Test

In response to the April 2020 RFI, SMTI recommended that DOE move the standby loss period of the test to the beginning of the 24-hour simulated-use test and to start the first draw at the 6-hour mark, asserting that doing so would increase the accuracy and repeatability of the test, and would decrease burden by eliminating the possibility of having to extend the 24-hour simulated-use test. (SMTI, No. 19 at p. 2) SMTI further asserted that the calculation for recovery efficiency can provide an artificially low value for water heaters with high storage volume and low input rates such as heat pump water heaters. For these water heaters, SMTI stated that the first recovery period could be delayed well past the start of the test, during which time the water heater would use a

significant amount of energy in standby (*e.g.,* controls and auxiliary components) and would lose a signification amount of energy through standby losses. SMTI asserted that when initiating the 24-hour simulated-use test with a 6-hour standby period, the energy use and tank temperatures for the recovery efficiency calculation would occur at 6 hours into the test (after completion of the standby period), and the recovery efficiency calculation error would be somewhat reduced based on the assumption that the first recovery would begin closer to the first draw, given that 6 hours of standby losses would have already accrued. (*Id.* at pp. 4-5)

As stated in section III.B.2.d, UA (the result of the standby period) has a negligible effect on UEF. Therefore, moving the standby period to the start of test would have a negligible effect on UEF in terms of improving the accuracy of the standby loss calculations. However, moving the standby period to the start of the test may have an effect on the recovery efficiency of large volume low input rate water heaters described by SMTI, and a large change in recovery efficiency can have a significant effect on UEF. From a review of DOE's available test data, the first recovery is rarely delayed past the first draw. If DOE were to adopt this alternate order 24-hour simulated-use test, all water heaters on the market would need to be retested. Therefore, DOE is not proposing to move the standby period to the start of the 24-hour simulated-use test, as the resulting burden to manufacturers to retest would result in a potential increase in accuracy for only a small subset of the consumer water heaters available on the market.

14. Untested Provisions

At 10 CFR 429.70, DOE specifies alternative methods for determining energy efficiency and energy use for certain covered products and equipment, including

consumer water heaters.[60] In general, these provisions allow a manufacturer to determine the energy efficiency or energy use of a basic model using an alternative efficiency determination method (AEDM) in lieu of actually testing the basic model. Specific to each product or equipment type covered by these AEDM provisions, DOE defines the criteria for using an AEDM and, for some products and equipment, procedures to be used to validate an AEDM and to perform verification testing on units certified using an AEDM.

The provisions at 10 CFR 429.70(g) provide alternative methods for determining ratings for "untested" basic models of residential water heaters and residential-duty commercial water heaters. For models of water heaters that differ only in fuel type or power input, these provisions allow manufacturers to establish ratings for untested basic models based on the ratings of tested basic models if certain prescribed requirements are met. (Simulations or other modeling predictions or ratings of UEF, volume, first-hour rating, or maximum gallons per minute are not permitted (10 CFR 429.70(g))).

Specifically, for gas water heaters, the provisions at 10 CFR 429.70(g)(1) specify that for untested basic models of gas-fired water heaters that differ from tested basic models only in whether the basic models use natural gas or propane gas, the represented value of UEF, FHR, and maximum gallons per minute for an untested basic model can be the same as those for a tested basic model, as long as the input ratings of the tested and untested basic models are within ±10 percent.

For electric storage water heaters, the provisions at 10 CFR 429.70(g)(2) specify rating an untested basic model using the FHR and the UEF obtained from a tested basic

[60] Section 429.71 uses the term "residential", which is synonymous with the use of the term "consumer" in this document.

model as a basis for ratings of basic models with other input ratings, provided that certain conditions are met: (1) each heating element of the untested basic model is rated at or above the input rating for the corresponding heating element of the tested basic model; and (2) for an untested basic model having any heating element with an input rating that is lower than that of the corresponding heating element in the tested basic model, the FHR for the untested basic model must result in the same draw pattern specified in Table I of appendix E for the simulated-use test as was applied to the tested basic model.[61] 10 CFR 429.70(g)(2)(i)-(ii)

As discussed previously, for certain products or equipment types for which the use of an AEDM is authorized, DOE prescribes procedures to be used to validate the AEDM and/or to perform verification testing on units certified using an AEDM. For consumer water heaters, however, DOE does not currently prescribe procedures to validate the alternative rating method or to perform verification testing of untested basic models that are certified using the provisions at 10 CFR 429.70(g).

The following sections discuss representations of the FHR value of certain untested models; consideration of extending the alternative rating method to electric instantaneous type water heaters; and proposed methods for verifying the ratings of untested models of water heaters.

a. Representations of FHR

[61] To establish whether this condition is met, the provisions at 10 CFR 429.70(g)(2)(ii) specify determining the FHR for the tested and the untested basic models in accordance with the procedure described in section 5.3.3 of 10 CFR part 430, subpart B, appendix E, and then comparing the appropriate draw pattern specified in Table I of appendix E for the FHR of the tested basic model with that for the untested basic model. If this condition is not met, then the untested basic model must be tested and the appropriate sampling provisions applied to determine its UEF in accordance with appendix E.

As discussed previously, the provisions at 10 CFR 429.70(g) allow for an untested electric storage water heater basic model with element wattages less than a tested basic model to use the FHR of the tested basic model, provided that the untested basic model's FHR is in the same draw pattern as the tested basic model. For an untested basic model with an element wattage that is lower than the tested basic model's, the tested FHR of the untested basic model will generally be less than the FHR of the tested basic model. In such cases, using the tested basic model's FHR to represent the untested model's FHR may not be as representative as using the FHR value directly determined from the untested model (the FHR of the untested basic model is determined pursuant to the procedures in appendix E specifically for the purpose of allowing use of the tested basic model's UEF rating). Instead, using the untested basic model's measured FHR for representation purposes, rather than the tested model's FHR (as currently required), could increase the representativeness of the certified FHR, while potentially not increasing burden on the manufacturer. DOE, therefore, is requesting comment on the potential to revise the existing provisions at 10 CFR 429.70(g)(2)(ii) for electric storage water heaters with element wattages less than the tested basic model to require that the represented FHR of the untested model be the untested basic model's FHR as determined according to the procedures at appendix E. Specifically, DOE is seeking information on whether manufacturers collect sufficient data to establish a rated value of FHR based on FHR testing for untested basic models, subject to the sampling plan requirements at 10 CFR 429.17 (*i.e.*, whether manufacturers currently measure the FHR of at least two units of an untested basic model to ensure it is in the same draw pattern bin as the tested model).

As discussed in section III.C.14.b, DOE is proposing to adopt provisions for rating untested electric instantaneous water heaters in a manner similar to that currently allowed for electric storage water heaters. Correspondingly, DOE is also requesting

comment on a proposal to require, for untested models of electric instantaneous water heaters with an input rating less than the tested model, that the represented maximum GPM value for the untested model be the actual value as determined for the untested model according to appendix E and the sampling plan requirements at 10 CFR 429.17. The represented UEF of the untested model still would match that of the tested basic model.

Should DOE amend the method for determining the represented value of FHR or maximum GPM for certain untested basic models of electric water heaters, such a change could be required beginning with the annual filing of certification reports following the effective date of any change. Manufacturers of consumer water heaters are required to submit an annual filing for covered basic models by May 1 of each year. 10 CFR 429.12(d).

b. Alternative Rating Method for Instantaneous Water Heaters

As described previously, the provisions at 10 CFR 429.70(g) allow manufacturers to apply ratings for a tested basic model to untested basic models of gas water heaters and electric storage water heaters if certain prescribed requirements are met. In response to the April 2020 RFI, A.O. Smith suggested that DOE consider extending the untested provisions in 10 CFR 429.70(g) to consumer and residential-duty electric instantaneous water heaters. (A.O. Smith, No. 20 at p. 5)

As discussed, untested electric storage water heater basic models are currently allowed to use the same FHR and UEF rating as a tested basic model, provided that one of the following two criteria are met: (1) each heating element of the untested basic model is rated at or above the input rating for the corresponding heating element of the

tested basic model; or (2) a tested FHR for the untested basic model with a lower input rating must result in the same draw pattern as the tested basic model. 10 CFR 429.70(g)(2).

Regarding the first criteria, the untested provisions for electric storage water heaters at 10 CFR 429.70(g)(2) allow an untested basic model to be rated the same as a tested basic model if each heating element of the untested basic model is rated at or above the input rating for the corresponding heating element of the tested basic model. DOE notes that as the input rate of a water heater increases, so too does the amount of hot water that it can deliver; and the more hot water the water heater can deliver, the higher the draw pattern that is required during the 24-hour simulated-use test. In general, for a given water heater, a higher draw pattern correlates with higher UEF results; conversely, a smaller draw pattern corresponds with lower UEF results. (DOE has found through its own testing that this trend holds for electric instantaneous water heaters in addition to storage water heaters.) As a result, higher input rates generally correlate with higher UEF values. Because higher input rates generally correlate with higher UEF values (due to a change in draw pattern, as described), an untested basic model with an input rate higher than the tested basic model is generally considered to be conservatively rated.

Regarding the second criteria, the untested provisions for electric storage water heaters at 10 CFR 429.70(g)(2) allow an untested basic model to be rated the same as a tested basic model if any heating element has in input rating lower than that of the corresponding heating element in the tested basic model and the tested FHR for the untested basic model results in the same draw pattern as that of the tested basic model.[62]

[62] Determining the applicable draw pattern for an untested model in this case requires performing the FHR test on the untested model and determining the draw pattern using Table I in section 5.4.1 of appendix E.

This requirement ensures that the UEF rating applied to the untested basic model is representative.

Because instantaneous water heaters exhibit the same trends in performance that justify the use of an alternative rating determination method for electric storage water heaters, DOE has tentatively determined that extending the use of the untested provisions to electric instantaneous water heaters in 10 CFR 429.70(g) would maintain a representative rating of these products' energy efficiency, while reducing manufacturer burden. Therefore, DOE is proposing to permit use of the untested provisions for electric instantaneous water heaters through newly proposed provisions at 10 CFR 429.70(g)(3). DOE is proposing that the criteria that currently apply to electric storage water heaters at 10 CFR 429.70(g)(2) would apply to electric instantaneous type water heaters at 10 CFR 429.70(g)(3), with the exceptions that: (1) the criteria for electric instantaneous water heaters would reference the maximum GPM rather than the FHR, as FHR applies only to storage water heaters; and (2) the criteria for electric instantaneous water heaters would reference the "input rate" rather than the "heating element" or "input rating for the corresponding heating element".

DOE has tentatively determined that extending the untested provisions in 10 CFR 429.70(g) to electric instantaneous water heaters would reduce manufacturer burden, as many basic models would not require testing, while maintaining an accurate representation of these products actual efficiency. Therefore, DOE is proposing to permit use of the untested provisions for electric instantaneous water heaters. DOE seeks comment on the proposal to establish provisions for rating untested basic models of electric instantaneous water heaters at 10 CFR 420.70(g)(3) that are analogous to the

existing provisions for rating untested basic models of electric storage water heaters at 10 CFR 429.70(g)(2).

D. Reporting

Manufacturers, including importers, must use product-specific certification templates[63] to certify compliance to DOE. For consumer water heaters, the certification template reflects the general certification requirements specified at 10 CFR 429.12 and the product-specific requirements specified at 10 CFR 429.17. As discussed in the previous paragraphs, DOE is not proposing to amend the product-specific certification requirements for these products.

E. Test Procedure Costs and Harmonization

1. Test Procedure Costs and Impact

In this NOPR, DOE proposes to amend the existing test procedure for consumer and residential-duty commercial water heaters by adding procedures to test water heaters designed to be used with a separately sold hot water storage tank, to test the newly defined low temperature water heaters, and to estimate the internal stored water temperature for water heater designs in which the internal tank temperature cannot be directly measured. DOE also proposes to amend the existing test procedure for consumer and residential-duty commercial water heaters by modifying the flow rate requirements during the FHR test for water heaters with a rated storage volume less than 20 gallons; the timing of the first measurement in each draw of the 24-hour simulated-use test; and the test condition specifications and tolerances, including electric supply voltage

[63] DOE's product-specific certification templates are available at: *www.regulations.doe.gov/ccms/templates.*

tolerance, ambient temperature, ambient dry bulb temperature, ambient relative humidity, standard temperature and pressure definition, gas supply pressure, and manifold pressure. DOE has tentatively determined that these proposed amendments would impact testing costs as discussed in the following paragraphs.

a. Water Heaters Requiring a Separately Sold Hot Water Storage Tank

DOE proposes to add procedures to test water heaters that are designed to be used with a separately sold hot water storage tank. These products raise the temperature of inlet water by less than the required temperature rise specified in sections 2.3 through 2.5 of appendix E and therefore require a storage volume (either a tank or circulation loop of sufficient size) to raise the temperature of the water to levels required by appendix E. Under the proposed procedures, the manufacturer, or third-party testing facility, would need to install the water heater with an 80-gallon unfired hot water storage tank which meets the energy conservation standard requirements at 10 CFR 431.110(a). DOE estimates that the cost of running the test procedure should be the same as testing a comparable water heater with storage volume (*i.e.,* testing a fossil fuel-fired or electric storage water heater would cost approximately $3,000 and testing an electric storage water heater which uses heat pump technology would cost approximately $4,500). In addition to the test cost, the manufacturer, or third-party testing facility, would have a one-time purchase of an unfired hot water storage tank which are commercially available for approximately $900.

DOE has tentatively determined that the proposed amendment regarding water heaters that are designed to be used with a separately sold hot water storage tank allow for these products to be tested to the DOE test procedure for consumer and residential-

duty commercial water heaters. Such testing would be required should the proposed amendments be finalized.

DOE requests comment on the impact and associated costs of this proposed amendment.

b. Water Heaters That Cannot Have Their Internal Tank Temperature Measured

DOE proposes to add procedures to appendix E to estimate the internal stored water temperature for water heater designs in which the internal tank temperature cannot be directly measured. These products have a rated storage volume greater than or equal to 2 gallons and are required to have the internal tank temperature measured as specified in section 4.5 of appendix E. However, these products are designed in such a way that instruments for measuring the internal water temperature cannot be installed. These products cannot be tested to the current version of appendix E. DOE estimates that the cost of running the test procedure should be the same as testing a comparable water heater with storage volume (*i.e.,* testing a fossil fuel-fired or electric storage water heater would cost approximately $3,000).

DOE requests comment on the impact and associated costs of this proposed amendment.

c. Additional Amendments

DOE does not anticipate that the remainder of the amendments proposed in this NOPR would impact test costs.

DOE proposes to amend section 2.5 of appendix E to allow low temperature water heaters to deliver water at their maximum outlet temperature that they are capable of. This proposal aligns with DOE's understanding of how these products are tested currently. As discussed in section III.C.7, manufacturers already should have requested a waiver for these products as the current test procedure cannot be used as written to test low temperature water heaters. As these products are currently tested and rated to the procedures which DOE is proposing, there should be no additional cost associated with this proposed change.

DOE also proposes to amend the existing test procedure for consumer and residential-duty commercial water heaters by modifying the flow rate requirements during the FHR test for water heaters with a rated storage volume less than 20 gallons. This change does not significantly affect the test results of the FHR test, thus DOE expects that manufacturers may rely on existing test data where available. Further, water heaters with less than 20 gallons of rated storage volume currently do not have energy conservation standards codified at 10 CFR 430.32(d) and are therefore not rated and certified to DOE.

DOE also proposes to amend the timing of the first measurement in each draw of the 24-hour simulated-use test and the test condition specifications and tolerances, including electric supply voltage tolerance, ambient temperature, ambient dry bulb temperature, ambient relative humidity, standard temperature and pressure definition, gas supply pressure, and manifold pressure. These changes are intended to reduce retesting associated with having a single measurement out of tolerance, while maintaining the current representativeness of the test conditions and the stringency of the tolerances for the test conditions.

DOE has tentatively determined that manufacturers would be able to rely on data generated under the current test procedure should any of these additional proposed amendments be finalized.

2. Harmonization with Industry Standards

DOE's established practice is to adopt relevant industry standards as DOE test procedures unless such methodology would be unduly burdensome to conduct or would not produce test results that reflect the energy efficiency, energy use, water use (as specified in EPCA) or estimated operating costs of that product during a representative average use cycle or period of use. Section 8(c) of appendix A of part 430 subpart C. In cases where the industry standard does not meet EPCA statutory criteria for test procedures, DOE will make modifications to these standards and adopt the modified standard as the DOE test procedure through the rulemaking process.

The test procedures for consumer water heaters at appendix E incorporate by reference ASHRAE 41.1-1986 (RA 2006), which describes the standard methods for temperature measurement, and ASTM D2156-09, which describes a test method for measuring the smoke density in flue gasses for burning distillate fuels. The industry standards DOE proposes to incorporate by reference via amendments described in this NOPR are discussed in further detail in section III.B. DOE requests comments on the benefits and burdens of the proposed updates and additions to industry standards referenced in the test procedure for consumer water heaters.

DOE notes that ASHRAE 41.1-1986 (RA 2006) and ASTM D2156-09 are incorporated by reference without modification.

In the April 2020 RFI, DOE discussed the possibility of adopting a finalized draft of ASHRAE 118.2, which in its drafted state is similar to appendix E. 85 FR 21104, 21109 (Apr. 16, 2020). A detailed discussion of the differences between the March 2019 ASHRAE Draft 118.2, the April 2021 ASHRAE Draft 118.2, and appendix E can be found in section III.B.2. In response to the April 2020 RFI, AHRI recommended adopting ASHRAE 118.2 once it is finalized and stated that as a user of the standard, DOE would define the specific test conditions. (AHRI, No. 17 at p. 3) The CA IOUs, CEC, CSA, Keltech, and NEEA supported adoption of ASHRAE 118.2 once updated. (CA IOUs, No. 18 at p. 3; CEC, No. 11 at pp. 2-3; CSA, No. 10 at p. 2; Keltech, No. 7 at p. 1; NEEA, No. 21 at p. 5) As discussed throughout section III.B.2, DOE has proposed certain changes to appendix E that have been presented in the March 2019 ASHRAE Draft 118.2 and April 2021 ASHRAE Draft 118.2. However, several changes presented in the March 2019 ASHRAE Draft 118.2 and January 2021 ASHRAE Draft 118.2 are either not proposed by DOE or are proposed by DOE with modification. In particular, DOE does not propose to scale the last draw of the FHR test (section III.B.2.c), to require a 6 hour standby period (section III.B.2.d), or to use the draft ASHRAE method for the last hour of the test regardless of whether the standby period occurred between draw clusters 1 and 2 or at the end of the test (section III.B.2.d). Further, DOE proposes the following amendments to appendix E, which are not included in either the March 2019 ASHRAE Draft 118.2 or the April 2021 ASHRAE Draft 118.2: updated test conditions and tolerances (section III.C.3); new definitions and test procedures for low temperature water heaters (section III.C.7); test procedures for heat pump only water heaters (section III.C.8.c), test procedures for circulating water heaters (section III.C.9); and test procedures for a drain down test method (section III.C.12). To reduce confusion due to the differences between the proposed appendix E and the March 2019 ASHRAE Draft 118.2 and April 2021 ASHRAE Draft 118.2, DOE has tentatively determined not to

incorporate by reference a finalized version of ASHRAE 118.2 without modification. Rather, DOE proposes to incorporate by reference a finalized ASHRAE 118.2 (contingent on the finalized update being substantively the same as the current draft made available for review) but only reference specific parts of the finalized ASHRAE 118.2 within appendix E (*e.g.,* Annex B as discussed in section III.C.3.b).

F. Compliance Date and Waivers

EPCA prescribes that, if DOE amends a test procedure, all representations of energy efficiency and energy use, including those made on marketing materials and product labels, must be made in accordance with that amended test procedure beginning 180 days after publication of such a test procedure final rule in the *Federal Register*. (42 U.S.C. 6293(c)(2); 42 U.S.C. 6314(d)(1)) To the extent the modified test procedure proposed in this document is required only for the evaluation and issuance of updated efficiency standards, use of the modified test procedure, if finalized, would not be required until the implementation date of updated standards. Section 8(d) of appendix A part 430 subpart C.

If DOE were to publish an amended test procedure, EPCA provides an allowance for individual manufacturers to petition DOE for an extension of the 180-day period if the manufacturer may experience undue hardship in meeting the deadline. (42 U.S.C. 6293(c)(3); 42 U.S.C. 6314(d)(2)) To receive such an extension, petitions must be filed with DOE no later than 60 days before the end of the 180-day period and must detail how the manufacturer will experience undue hardship. (*Id.*)

Upon the compliance date of test procedure provisions of an amended test procedure, should DOE issue a such an amendment, any waivers that had been previously

issued and are in effect that pertain to issues addressed by such provisions are terminated. 10 CFR 430.27(h)(3); 10 CFR 431.401(h)(3). Recipients of any such waivers would be required to test the products subject to the waiver according to the amended test procedure as of the compliance date of the amended test procedure. The amendments proposed in this document pertain to issues addressed by waivers granted to Bradford White Corporation (Case No. 2019-006).

On January 31, 2020, DOE published a Notice of Decision and Order in the *Federal Register* granting Bradford White Corporation a waiver for a specified basic model that experiences the first cut-out of the 24-hour simulated-use test during a draw. 85 FR 5648. The Decision and Order requires Bradford White Corporation to use an alternate test procedure that DOE determined more accurately calculates the recovery efficiency when the first cut-out occurs during a draw. *Id*. at 85 FR 5651. DOE has tentatively determined that the alternate test procedure is representative of real-world use conditions for the basic model specified in the Decision and Order. In the April 2020 RFI, DOE requested feedback on whether the test procedure waiver approach is generally appropriate for testing basic models with these features. 85 FR 21104, 21114 (April 16, 2020). AHRI, A.O. Smith, and BWC commented that the test procedure waiver approach is appropriate for testing basic models with the specified features and that the waiver test procedure should be incorporated into the current rule making so that it may be utilized more broadly. (AHRI, No. 17 at p. 12; A.O. Smith, No. 20 at p. 5; BWC, No. 12 at pp. 5-6) AHRI pointed out that the Bradford White Corporation test procedure waiver is implemented in ASHRAE 118.2 and must be adopted by DOE. (AHRI, No. 17 at p. 12)

As a result, and as also discussed in section III.B.2.d, DOE is proposing to adopt the alternate test procedure prescribed in the Decision and Order granted to Bradford White Corporation into the test procedure at appendix E.

IV. Procedural Issues and Regulatory Review

A. Review Under Executive Order 12866

The Office of Management and Budget (OMB) has determined that this test procedure rulemaking does not constitute a "significant regulatory action" under section 3(f) of Executive Order (E.O.) 12866, Regulatory Planning and Review, 58 FR 51735 (Oct. 4, 1993). Accordingly, this action was not subject to review under the Executive order by the Office of Information and Regulatory Affairs (OIRA) in OMB.

B. Review Under the Regulatory Flexibility Act

The Regulatory Flexibility Act (5 U.S.C. 601 *et seq.*) requires preparation of an initial regulatory flexibility analysis (IRFA) for any rule that by law must be proposed for public comment, unless the agency certifies that the rule, if promulgated, will not have a significant economic impact on a substantial number of small entities. As required by Executive Order 13272, "Proper Consideration of Small Entities in Agency Rulemaking," 67 FR 53461 (August 16, 2002), DOE published procedures and policies on February 19, 2003, to ensure that the potential impacts of its rules on small entities are properly considered during the DOE rulemaking process. 68 FR 7990. DOE has made its procedures and policies available on the Office of the General Counsel's website: *www.energy.gov/gc/office-general-counsel*. DOE reviewed this proposed rule under the

provisions of the Regulatory Flexibility Act and the policies and procedures published on February 19, 2003.

The following sections detail DOE's IRFA for this test procedure rulemaking.

1. Description of reasons why action is being considered

DOE is proposing to amend test procedures for consumer water heaters and residential-duty commercial water heaters. DOE is publishing this NOPR in satisfaction of the 7-year review requirement specified in EPCA. (42 U.S.C. 6293(b)(1)(A); 6314(a)(1)) Further, amending test procedures for consumer and residential-duty commercial water heaters assists DOE in fulfilling its statutory deadline for amending energy conservation standards for products and equipment that achieve the maximum improvement in energy efficiency that is technologically feasible and economically justified. (42 U.S.C. 6295(o)(2)(A); 42 U.S.C. 6313(a)(6)) Additionally, amending test procedures for consumer and residential-duty commercial water heaters allows manufacturers to produce measurements of energy efficiency that are representative of an average use cycle and uniform for all manufacturers.

2. Objectives of, and legal basis for, rule

DOE has undertaken this proposed rulemaking pursuant to 42 U.S.C. 6292(a)(4) and 42 U.S.C. 6312(a), which authorizes DOE to regulate the energy efficiency of a number of consumer products and certain industrial equipment, including the consumer and residential-duty commercial water heaters that are the subject of this proposed rulemaking.

3. Description and estimate of small entities regulated

For manufacturers of consumer water heaters and residential-duty commercial water heaters, the SBA has set a size threshold, which defines those entities classified as "small businesses" for the purposes of the statute. DOE used the SBA's small business size standards to determine whether any small entities would be subject to the requirements of the rule. (*See* 13 CFR part 121.) The size standards are listed by North American Industry Classification System ("NAICS") code and industry description and are available at: *www.sba.gov/document/support--table-size-standards*. Manufacturing of consumer water heaters and residential-duty commercial water heaters is classified under NAICS 335220, "Major Household Appliance Manufacturing." The SBA sets a threshold of 1,500 employees or fewer for an entity to be considered as a small business for this category. DOE used available public information to identify potential small manufacturers. DOE accessed CCMS,[64] the certified product directory of the AHRI[65], company websites, and manufacturer literature to identify companies that import, private label, or produce the consumer water heaters and residential-duty commercial water heaters covered by this proposal. Using these sources, DOE identified a total of 31 manufacturers of consumer water heaters and residential-duty commercial water heaters.

Of the proposals in this NOPR, two amendments could potentially lead to additional costs for manufacturers:

- Defining the use of a separate unfired hot water storage tank for testing water heaters designed to operate with a separately sold hot water storage tank.

[64] U.S. Department of Energy Compliance Certification Management System, available at: *www.regulations.doe.gov/ccms*.
[65] AHRI Directory of Certified Product Performance, available at: *www.ahridirectory.org/Search/SearchHome*.

- Adding procedures for estimating internal stored water temperature for water heater designs in which the internal tank temperature cannot be directly measured.

After reviewing models in the CCMS and AHRI Directory for the 31 manufacturers, DOE identified six companies that could incur additional testing costs as result of the proposed test procedures amendments. Of the six companies, one is a small domestic manufacturer that could incur costs as a result of the proposed test procedure amendments. The small domestic manufacturer offers one model in which the internal tank temperature cannot be directly measured.

4. Description and estimate of compliance requirements

In this NOPR, DOE evaluates a range of potential test procedure amendments. One amendment could lead to additional testing costs for small business. The existing DOE test procedure does not accommodate testing of water heaters that require a separately sold hot water storage tank to properly operate. Such products are currently available on the market.

DOE proposes to add procedures to test such water heaters to improve the representativeness of the test procedure. Under the proposed amendments, the testing facility would need to install the water heater with a commonly available 80-gallon unfired hot water storage tank which meets the energy conservation standard requirements at 10 CFR 431.110(a). DOE estimates that the cost of running the amended test procedure should be the same as testing a comparable water heater with storage

volume (*i.e.,* third-party testing of a fossil fuel-fired or electric storage water heater would cost approximately $3,000 and third-party testing of an electric storage water heater which uses heat pump technology would cost approximately $4,500). If a small manufacturer chose to perform in-house testing rather than use a third-party, the unfired hot water storage tank is commercially available for approximately $900.

The one domestic small manufacturer has a single model that would be affected by this amendment. DOE expects the cost to re-test that model to be $4,500. This is less than 0.01% of company revenue.

DOE requests comment of the cost impacts to small business of the test procedure change to accommodate testing of water heaters that require a separately sold hot water storage tank.

5. Duplication, Overlap, and Conflict with Other Rules and Regulations

DOE is not aware of any rules or regulations that duplicate, overlap, or conflict with the rule being considered today.

6. Significant Alternatives to the Rule

The discussion in the previous section analyzes impacts on small businesses that would result from DOE's proposed test procedure, if finalized. In reviewing alternatives to the proposed test procedure, DOE examined not establishing a performance-based test procedure for consumer and residential-duty commercial water heaters or establishing prescriptive-based test procedures. While not establishing performance-based test procedures or establishing prescriptive-based test procedures for consumer and

residential-duty commercial water heaters would reduce the burden on small businesses, DOE must use test procedures to determine whether the products comply with relevant standards promulgated under EPCA. (42 U.S.C. 6295(s)) Because establishing performance-based test procedures for consumer and residential-duty commercial water heaters is necessary prior to establishing performance-based energy conservation standards, DOE tentatively concludes that establishing performance-based test procedures, as proposed in this NOPR, supports DOE's authority to achieve the maximum improvement in energy efficiency that is technologically feasible and economically justified. (42 U.S.C. 6295(o)(2)(A); 42 U.S.C. 6313(a)(6)(A)(ii)(II))

The Department has tentatively determined that there are no better alternatives than the test procedures amendments proposed in this NOPR, in terms of both meeting the agency's objectives and reducing burden. Additionally, manufacturers subject to DOE's test procedures may apply to DOE's Office of Hearings and Appeals for exception relief under certain circumstances. Manufacturers should refer to 10 CFR part 430, subpart E, and 10 CFR part 1003 for additional details.

DOE seeks comments on these findings related to significant alternative related to small entities.

C. Review Under the Paperwork Reduction Act of 1995

Manufacturers of consumer and commercial water heaters must certify to DOE that their products comply with any applicable energy conservation standards. To certify compliance, manufacturers must first obtain test data for their products according to the DOE test procedures, including any amendments adopted for those test procedures. DOE has established regulations for the certification and recordkeeping requirements for all

covered consumer products and commercial equipment, including consumer and commercial water heaters. (*See generally* 10 CFR part 429.) The collection-of-information requirement for the certification and recordkeeping is subject to review and approval by OMB under the Paperwork Reduction Act (PRA). This requirement has been approved by OMB under OMB control number 1910-1400. Public reporting burden for the certification is estimated to average 35 hours per response, including the time for reviewing instructions, searching existing data sources, gathering and maintaining the data needed, and completing and reviewing the collection of information.

Notwithstanding any other provision of the law, no person is required to respond to, nor shall any person be subject to a penalty for failure to comply with, a collection of information subject to the requirements of the PRA, unless that collection of information displays a currently valid OMB Control Number.

D. Review Under the National Environmental Policy Act of 1969

In this NOPR, DOE proposes test procedure amendments that DOE expects will be used to develop and implement future energy conservation standards for consumer water heaters. DOE has determined that this rule falls into a class of actions that are categorically excluded from review under the National Environmental Policy Act of 1969 (42 U.S.C. 4321 *et seq*.) and DOE's implementing regulations at 10 CFR part 1021. Specifically, DOE has determined that adopting test procedures for measuring energy efficiency of consumer products and industrial equipment is consistent with activities identified in 10 CFR part 1021, appendix A to subpart D, A5 and A6. Accordingly, neither an environmental assessment nor an environmental impact statement is required.

E. Review Under Executive Order 13132

Executive Order 13132, "Federalism," 64 FR 43255 (Aug. 4, 1999) imposes certain requirements on agencies formulating and implementing policies or regulations that preempt State law or that have federalism implications. The E.O. requires agencies to examine the constitutional and statutory authority supporting any action that would limit the policymaking discretion of the States and to carefully assess the necessity for such actions. The E.O. also requires agencies to have an accountable process to ensure meaningful and timely input by State and local officials in the development of regulatory policies that have federalism implications. On March 14, 2000, DOE published a statement of policy describing the intergovernmental consultation process it will follow in the development of such regulations. 65 FR 13735. DOE has examined this proposed rule and has determined that it would not have a substantial direct effect on the States, on the relationship between the national government and the States, or on the distribution of power and responsibilities among the various levels of government. EPCA governs and prescribes Federal preemption of State regulations as to energy conservation for the products that are the subject of this proposed rule. States can petition DOE for exemption from such preemption to the extent, and based on criteria, set forth in EPCA. (42 U.S.C. 6297(d)) No further action is required by E.O 13132.

F. Review Under Executive Order 12988

Regarding the review of existing regulations and the promulgation of new regulations, section 3(a) of E.O. 12988, "Civil Justice Reform," 61 FR 4729 (Feb. 7, 1996), imposes on Federal agencies the general duty to adhere to the following requirements: (1) eliminate drafting errors and ambiguity, (2) write regulations to minimize litigation, (3) provide a clear legal standard for affected conduct rather than a general standard, and (4) promote simplification and burden reduction. Section 3(b) of

E.O. 12988 specifically requires that executive agencies make every reasonable effort to ensure that the regulation (1) clearly specifies the preemptive effect, if any, (2) clearly specifies any effect on existing Federal law or regulation, (3) provides a clear legal standard for affected conduct while promoting simplification and burden reduction, (4) specifies the retroactive effect, if any, (5) adequately defines key terms, and (6) addresses other important issues affecting clarity and general draftsmanship under any guidelines issued by the Attorney General. Section 3(c) of E.O. 12988 requires executive agencies to review regulations in light of applicable standards in sections 3(a) and 3(b) to determine whether they are met or it is unreasonable to meet one or more of them. DOE has completed the required review and determined that, to the extent permitted by law, the proposed rule meets the relevant standards of E.O. 12988.

G. Review Under the Unfunded Mandates Reform Act of 1995

Title II of the Unfunded Mandates Reform Act of 1995 (UMRA) requires each Federal agency to assess the effects of Federal regulatory actions on State, local, and Tribal governments and the private sector. Pub. L. 104-4, sec. 201 (codified at 2 U.S.C. 1531). For a proposed regulatory action likely to result in a rule that may cause the expenditure by State, local, and Tribal governments, in the aggregate, or by the private sector of $100 million or more in any one year (adjusted annually for inflation), section 202 of UMRA requires a Federal agency to publish a written statement that estimates the resulting costs, benefits, and other effects on the national economy. (2 U.S.C. 1532(a), (b)) The UMRA also requires a Federal agency to develop an effective process to permit timely input by elected officers of State, local, and Tribal governments on a proposed "significant intergovernmental mandate," and requires an agency plan for giving notice and opportunity for timely input to potentially affected small governments before

establishing any requirements that might significantly or uniquely affect small governments. On March 18, 1997, DOE published a statement of policy on its process for intergovernmental consultation under UMRA. 62 FR 12820; also available at *www.energy.gov/gc/office-general-counsel*. DOE examined this proposed rule according to UMRA and its statement of policy and determined that the rule contains neither an intergovernmental mandate, nor a mandate that may result in the expenditure of $100 million or more in any year, so these requirements do not apply.

H. Review Under the Treasury and General Government Appropriations Act, 1999

Section 654 of the Treasury and General Government Appropriations Act, 1999 (Pub. L. 105-277) requires Federal agencies to issue a Family Policymaking Assessment for any rule that may affect family well-being. This proposed rule would not have any impact on the autonomy or integrity of the family as an institution. Accordingly, DOE has concluded that it is not necessary to prepare a Family Policymaking Assessment.

I. Review Under Executive Order 12630

DOE has determined, under E.O. 12630, "Governmental Actions and Interference with Constitutionally Protected Property Rights," 53 FR 8859 (March 18, 1988), that this proposed regulation would not result in any takings that might require compensation under the Fifth Amendment to the U.S. Constitution.

J. Review Under Treasury and General Government Appropriations Act, 2001

Section 515 of the Treasury and General Government Appropriations Act, 2001 (44 U.S.C. 3516 note) provides for agencies to review most disseminations of information to the public under guidelines established by each agency pursuant to general guidelines issued by OMB. OMB's guidelines were published at 67 FR 8452 (Feb. 22, 2002), and DOE's guidelines were published at 67 FR 62446 (Oct. 7, 2002). Pursuant to OMB Memorandum M-19-15, Improving Implementation of the Information Quality Act (April 24, 2019), DOE published updated guidelines which are available at: *www.energy.gov/sites/prod/files/2019/12/f70/DOE%20Final%20Updated%20IQA%20Guidelines%20Dec%202019.pdf*. DOE has reviewed this proposed rule under the OMB and DOE guidelines and has concluded that it is consistent with applicable policies in those guidelines.

K. Review Under Executive Order 13211

E.O. 13211, "Actions Concerning Regulations That Significantly Affect Energy Supply, Distribution, or Use," 66 FR 28355 (May 22, 2001), requires Federal agencies to prepare and submit to OMB, a Statement of Energy Effects for any proposed significant energy action. A "significant energy action" is defined as any action by an agency that promulgated or is expected to lead to promulgation of a final rule, and that (1) is a significant regulatory action under E.O. 12866, or any successor order; and (2) is likely to have a significant adverse effect on the supply, distribution, or use of energy; or (3) is designated by the Administrator of OIRA as a significant energy action. For any proposed significant energy action, the agency must give a detailed statement of any adverse effects on energy supply, distribution, or use should the proposal be implemented, and of reasonable alternatives to the action and their expected benefits on energy supply, distribution, and use.

The proposed regulatory action to amend the test procedure for measuring the energy efficiency of consumer and commercial water heaters is not a significant regulatory action under E.O. 12866. Moreover, it would not have a significant adverse effect on the supply, distribution, or use of energy, nor has it been designated as a significant energy action by the Administrator of OIRA. Therefore, it is not a significant energy action, and, accordingly, DOE has not prepared a Statement of Energy Effects.

L. Review Under Section 32 of the Federal Energy Administration Act of 1974

Under section 301 of the Department of Energy Organization Act (Pub. L. 95–91; 42 U.S.C. 7101), DOE must comply with section 32 of the Federal Energy Administration Act of 1974, as amended by the Federal Energy Administration Authorization Act of 1977. (15 U.S.C. 788; FEAA) Section 32 essentially provides in relevant part that, where a proposed rule authorizes or requires use of commercial standards, the notice of proposed rulemaking must inform the public of the use and background of such standards. In addition, section 32(c) requires DOE to consult with the Attorney General and the Chairman of the Federal Trade Commission (FTC) concerning the impact of the commercial or industry standards on competition.

The proposed modifications to the test procedure for consumer and commercial water heaters would incorporate testing methods contained in certain sections of the following commercial standards: ASHRAE 41.1-2020, ASTM D2156-09 (RA 2018), and a finalized version of ASHRAE 118.2. DOE has evaluated these standards and is unable to conclude whether it fully complies with the requirements of section 32(b) of the FEAA (*i.e.*, whether it was developed in a manner that fully provides for public participation, comment, and review.) DOE will consult with both the Attorney General and the

Chairman of the FTC concerning the impact of these test procedures on competition, prior to prescribing a final rule.

M. Description of Materials Incorporated by Reference

In this NOPR, DOE proposes to incorporate by reference the test standard published by ASHRAE, titled "Standard Methods for Temperature Measurement," ASHRAE 41.1-2020; the test standard published by ANSI/ASHRAE, titled "Standard Method for Humidity Measurement," Standard 41.6-2014; the test standard published by ASHRAE, titled "Method of Testing for Rating Residential Water Heaters and Residential-Duty Commercial Water Heaters," ASHRAE 118.2-[year finalized]; the test standard published by ASTM, titled "Standard Test Method for Smoke Density in Flue Gases from Burning Distillate Fuels," ASTM D2156-09 (RA 2018); and, the test standard published by ASTM, titled "Standard Test Methods for Directional Reflectance Factor, 45-Deg 0-Deg, of Opaque Specimens by Broad-Band Filter Reflectometry," ASTM E97-1987 (W1991).

ASHRAE 41.1-2020 prescribes methods for measuring temperature under laboratory and field conditions which are required for system performance tests and for testing heating, ventilating, air-conditioning, and refrigerating components. ASHRAE 41.6-2014 prescribes methods for measuring the humidity of moist air with instruments. ASHRAE 118.2-[year finalized] provides test procedures for rating the efficiency and hot water delivery capabilities of directly heated residential water heaters and residential-duty commercial water heaters. ASTM D2156-09 (RA 2018) provides a test method to evaluate the density of smoke in the flue gases from burning distillate fuels, is intended primarily for use with home heating equipment burning kerosene or heating oils, and can

be used in the laboratory or in the field to compare fuels for clean burning or to compare heating equipment. ASTM E97-1987 (W1991) provides a method to determinate of the 45-deg, 0-deg directional reflectance factor of nonfluorescent opaque specimens by means of filter photometers.

Copies of ASHRAE 41.1-2020, ASHRAE 41.6-2014, and ASHRAE 118.2-[year finalized] can be obtained from the American Society of Heating, Refrigerating, and Air-Conditioning Engineers, Inc., 1791 Tullie Circle, NE., Atlanta, GA 30329, (800) 527-4723 or (404) 636-8400, or online at: *www.ashrae.org*.

Copies of ASTM D2156-09 (RA 2018) and ASTM E97-1987 (W1991) can be obtained from the American Society for Testing and Materials International, 100 Barr Harbor Drive, P.O. Box C700, West Conshohocken, PA 19428-2959 or online at: *www.astm.org*.

V. Public Participation

A. Participation in the Webinar

The time and date of the webinar are listed in the **DATES** section at the beginning of this document. If no participants register for the webinar, it will be cancelled. Webinar registration information, participant instructions, and information about the capabilities available to webinar participants will be published on DOE's website: *www1.eere.energy.gov/buildings/appliance_standards/standards.aspx?productid=32*. Participants are responsible for ensuring their systems are compatible with the webinar software.

B. Submission of Comments

DOE will accept comments, data, and information regarding this proposed rule no later than the date provided in the **DATES** section at the beginning of this proposed rule. Interested parties may submit comments using any of the methods described in the **ADDRESSES** section at the beginning of this document.

Submitting comments via www.regulations.gov. The *www.regulations.gov* web page will require you to provide your name and contact information. Your contact information will be viewable to DOE Building Technologies staff only. Your contact information will not be publicly viewable except for your first and last names, organization name (if any), and submitter representative name (if any). If your comment is not processed properly because of technical difficulties, DOE will use this information to contact you. If DOE cannot read your comment due to technical difficulties and cannot contact you for clarification, DOE may not be able to consider your comment.

However, your contact information will be publicly viewable if you include it in the comment or in any documents attached to your comment. Any information that you do not want to be publicly viewable should not be included in your comment, nor in any document attached to your comment. Persons viewing comments will see only first and last names, organization names, correspondence containing comments, and any documents submitted with the comments.

Do not submit to *www.regulations.gov* information for which disclosure is restricted by statute, such as trade secrets and commercial or financial information (hereinafter referred to as Confidential Business Information (CBI)). Comments submitted through *www.regulations.gov* cannot be claimed as CBI. Comments received

through the website will waive any CBI claims for the information submitted. For information on submitting CBI, see the Confidential Business Information section.

DOE processes submissions made through *www.regulations.gov* before posting. Normally, comments will be posted within a few days of being submitted. However, if large volumes of comments are being processed simultaneously, your comment may not be viewable for up to several weeks. Please keep the comment tracking number that *www.regulations.gov* provides after you have successfully uploaded your comment.

Submitting comments via email. Comments and documents submitted via email also will be posted to *www.regulations.gov*. If you do not want your personal contact information to be publicly viewable, do not include it in your comment or any accompanying documents. Instead, provide your contact information on a cover letter. Include your first and last names, email address, telephone number, and optional mailing address. The cover letter will not be publicly viewable as long as it does not include any comments.

Include contact information each time you submit comments, data, documents, and other information to DOE. No faxes will be accepted.

Comments, data, and other information submitted to DOE electronically should be provided in PDF (preferred), Microsoft Word or Excel, WordPerfect, or text (ASCII) file format. Provide documents that are not secured, written in English and free of any defects or viruses. Documents should not contain special characters or any form of encryption and, if possible, they should carry the electronic signature of the author.

Campaign form letters. Please submit campaign form letters by the originating organization in batches of between 50 to 500 form letters per PDF or as one form letter with a list of supporters' names compiled into one or more PDFs. This reduces comment processing and posting time.

Confidential Business Information. Pursuant to 10 CFR 1004.11, any person submitting information that he or she believes to be confidential and exempt by law from public disclosure should submit via email two well-marked copies: one copy of the document marked confidential including all the information believed to be confidential, and one copy of the document marked non-confidential with the information believed to be confidential deleted. DOE will make its own determination about the confidential status of the information and treat it according to its determination.

It is DOE's policy that all comments may be included in the public docket, without change and as received, including any personal information provided in the comments (except information deemed to be exempt from public disclosure).

VI. Approval of the Office of the Secretary

The Secretary of Energy has approved publication of this notice of proposed rulemaking and request for comment.

List of Subjects

10 CFR Part 429

Administrative practice and procedure, Confidential business information, Energy conservation, Household appliances, Reporting and recordkeeping requirements.

10 CFR Part 430

Administrative practice and procedure, Confidential business information, Energy conservation, Household appliances, Imports, Incorporation by reference, Intergovernmental relations, Small businesses.

10 CFR Part 431

Administrative practice and procedure, Confidential business information, Energy conservation test procedures, Incorporation by reference, Reporting and recordkeeping requirements.

Signing Authority

This document of the Department of Energy was signed on December 9, 2021, by Kelly J. Speakes-Backman, Principal Deputy Assistant Secretary for Energy Efficiency and Renewable Energy, pursuant to delegated authority from the Secretary of Energy. That document with the original signature and date is maintained by DOE. For administrative purposes only, and in compliance with requirements of the Office of the Federal Register, the undersigned DOE Federal Register Liaison Officer has been authorized to sign and submit the document in electronic format for publication, as an official document of the Department of Energy. This administrative process in no way alters the legal effect of this document upon publication in the *Federal Register*.

Signed in Washington, DC, on December 9, 2021

_____

Treena V. Garrett
Federal Register Liaison Officer,
U.S. Department of Energy

For the reasons stated in the preamble, DOE is proposing to amend parts 429, 430, and 431 of Chapter II of Title 10, Code of Federal Regulations, as set forth below:

PART 429 -- CERTIFICATION, COMPLIANCE, AND ENFORCEMENT FOR CONSUMER PRODUCTS AND COMMERCIAL AND INDUSTRIAL EQUIPMENT

1. The authority citation for part 429 continues to read as follows:

Authority: 42 U.S.C. 6291-6317; 28 U.S.C. 2461 note.

2. Amend §429.70 by adding paragraph (g)(3) to read as follows:

§429.70 Alternative methods for determining energy efficiency and energy use.

* * * * *

(g) * * *

(3) *Electric Instantaneous Water Heaters.* Rate an untested basic model of an electric instantaneous type water heater using the maximum GPM and the uniform energy factor obtained from a tested basic model as a basis for ratings of basic models with other input ratings, provided that certain conditions are met:

(i) For an untested basic model, the represented value of the maximum GPM and the uniform energy factor is the same as that of a tested basic model, provided that the untested basic model's input is rated at or above the input rating for the corresponding tested basic model.

(ii) For an untested basic model having any input rating that is lower than that of the corresponding tested basic model, the represented value of the maximum GPM and the uniform energy factor is the same as that of a tested basic model, provided that the maximum GPM for the untested basic model results in the same draw pattern specified in Table II of appendix E for the 24-hour simulated-use test as was applied to the tested basic model. To establish whether this condition is met, determine the maximum GPM for the tested and the untested basic models in accordance with the procedure described in section 5.3.2 of 10 CFR part 430, subpart B, appendix E, then compare the appropriate draw pattern specified in Table II of appendix E for the maximum GPM of the tested basic model with that for the untested basic model. If this condition is not met, then the untested basic model must be tested and the appropriate sampling provisions applied to determine its uniform energy factor in accordance with appendix E and this part.

* * * * *

3. Amend §429.134 by adding paragraph (d)(3) to read as follows:

§429.134 Product-specific enforcement provisions.

* * * * *

(d) * * *

(3) *Verification of fuel input rate.* The fuel input rate of each tested unit of the basic model will be measured pursuant to the test requirements of section 5.2.3 of 10 CFR part 430, subpart B, appendix E. The measured fuel input rate (either the measured fuel input rate for a single unit sample or the average of the measured fuel input rates for

a multiple unit sample) will be compared to the rated input certified by the manufacturer. The certified rated input will be considered valid only if the measured fuel input rate is within ±2 percent of the certified rated input.

(i) If the certified rated input is found to be valid, then the certified rated input will be used to determine compliance with the associated energy conservation standard.

(ii) If the measured fuel input rate is not within ±2 percent of the certified rated input, the measured fuel input rate will be used to determine compliance with the associated energy conservation standard.

(iii) If the measured fuel input rate for oil-fired water heating products is not within ±2 percent of the certified rated input, the measured fuel input rate will be used to determine compliance with the associated energy conservation standard.

* * * * *

PART 430 -- ENERGY CONSERVATION PROGRAM FOR CONSUMER PRODUCTS

4. The authority citation for part 430 continues to read as follows:

Authority: 42 U.S.C. 6291-6309; 28 U.S.C. 2461 note.

5. Amend §430.2 by adding, in alphabetical order, the definitions of "*Circulating water heater*", "*Low temperature water heater*", and "*Tabletop water heater*" to read as follows:

§430.2 Definitions.

* * * * *

Circulating water heater means an instantaneous or heat pump type water heater that does not have an operational scheme in which the burner, heating element, or compressor initiates and/or terminates heating based on sensing flow; has a water temperature sensor located at the inlet of the water heater or in a separate storage tank that is the primary means of initiating and terminating heating; and must be used in combination with a recirculating pump and either a separate storage tank or water circulation loop in order to achieve the water flow and temperature conditions recommended in the manufacturer's installation and operation instructions.

* * * * *

Low temperature water heater means an electric instantaneous water heater that is not a circulating water heater and cannot deliver water at a temperature greater than or equal to the set point temperature specified in section 2.5 of appendix E to subpart B of this part when supplied with water at the supply water temperature specified in section 2.3 of appendix E to subpart B of this part.

* * * * *

Tabletop water heater means a heater in a rectangular box enclosure designed to slide into a kitchen countertop space with typical dimensions of 36 inches high, 25 inches deep and 24 inches wide.

* * * * *

6. Section 430.3 is amended by:

a. Revising paragraph (g)(5);

b. Redesignating paragraphs (g)(8) as (9);

c. Adding new paragraph (g)(8);

d. Redesignating paragraphs (g)(10) and (11), as (g)(11) and (12);

e. Revising newly designated paragraph (g)(12);

f. Redesignating paragraphs (g)(13)through (17), as (g)(14) through (18);

g. Redesignating paragraph (g)(19) as (20);

h. Adding new paragraph (g)(19);

i. Revising paragraph (j)(1); and

j. Adding paragraphs (j)(3) and (4);

The revisions and additions read as follows:

§430.3 Materials incorporated by reference.

* * * * *

(g) * * *

(5) ASHRAE 41.1-1986 (Reaffirmed 2006), Standard Method for Temperature Measurement, approved February 18, 1987, IBR approved for appendix AA to subpart B.

* * * * *

(8) ANSI/ASHRAE Standard 41.1-2020, ("ANSI/ASHRAE 41.1-2020"), Standard Method for Temperature Measurement, ANSI approved June 30, 2020, IBR approved for appendix E to subpart B.

* * * * *

(12) ANSI/ASHRAE Standard 41.6-2014, ("ASHRAE 41.6-2014"), Standard Method for Humidity Measurement, ANSI approved July 3, 2014, IBR approved for appendices E and F to subpart B.

* * * * *

(19) ANSI/ASHRAE Standard 118.2-[*year finalized*], ("[*ASHRAE 118.2-TBD*]"), Method of Testing for Rating Residential Water Heaters and Residential-Duty Commercial Water Heaters, ANSI approved [*date finalized*], IBR approved for appendix E to subpart B.

* * * * *

(j) * * *

(1) ASTM D2156-09, ("ASTM D2156"), Standard Test Method for Smoke Density in Flue Gases from Burning Distillate Fuels, ASTM approved December 1, 2009, IBR approved for appendix O to subpart B.

* * * * *

(3) ASTM D2156-09 (Reapproved 2018), ("ASTM D2156 (RA 2018)"), Standard Test Method for Smoke Density in Flue Gases from Burning Distillate Fuels, ASTM approved October 1, 2018, IBR approved for appendix E to subpart B.

(4) ASTM E97-1987 (Withdrawn 1991) ("ASTM E97-1987 (W1991)"), Standard Test Methods for Directional Reflectance Factor, 45-Deg 0-Deg, of Opaque Specimens by Broad-Band Filter Reflectometry, approved January 1987, IBR approved for appendix E to subpart B.

* * * * *

7. Appendix E to subpart B of part 430 is revised to read as follows:

APPENDIX E TO SUBPART B OF PART 430—UNIFORM TEST METHOD FOR MEASURING THE ENERGY CONSUMPTION OF WATER HEATERS

NOTE: Prior to [*date 180 days after publication of the final rule in the federal register*], representations with respect to the energy use or efficiency of consumer water heaters and commercial water heaters covered by this test method, including compliance certifications, must be based on testing conducted in accordance with either this appendix as it now appears or appendix E as it appeared at 10 CFR part 430, subpart B revised as of January 1, 2021.

On and after [*date 180 days after date of publication of the final rule in the federal register*], representations with respect to energy use or efficiency of consumer water heaters and commercial water heaters covered by this test method, including

compliance certifications, must be based on testing conducted in accordance with this appendix.

0. Incorporation by Reference.

DOE incorporated by reference in §430.3 the entire standard for: ANSI/ASHRAE 41.1-2020; ASHRAE 41.6-2014; [*ASHRAE 118.2-TBD*]; ASTM D2156 (RA 2018); and ASTM E97-1987 (W1991). However, only enumerated provisions of [*ASHRAE 118.2-TBD*] are applicable to this appendix, as follows:

(1) [*ASHRAE 118.2-TBD*]

(i) Annex B - Gas Heating Value Correction Factor;

(ii) Reserved.

1. Definitions.

1.1. *Cut-in* means the time when or water temperature at which a water heater control or thermostat acts to increase the energy or fuel input to the heating elements, compressor, or burner.

1.2. *Cut-out* means the time when or water temperature at which a water heater control or thermostat acts to reduce to a minimum the energy or fuel input to the heating elements, compressor, or burner.

1.3. *Design Power Rating* means the power rating or input rate that a water heater manufacturer assigns to a particular design of water heater and that is included on the nameplate of the water heater, expressed in kilowatts or Btu (kJ) per hour as appropriate. For modulating water heaters, the design power rating is the maximum power rating or input rate that is specified by the manufacturer on the nameplate of the water heater.

1.4. *Draw Cluster* means a collection of water draws initiated during the 24-hour simulated-use test during which no successive draws are separated by more than 2 hours.

1.5. *First-Hour Rating* means an estimate of the maximum volume of "hot" water that a non-flow activated water heater can supply within an hour that begins with the water heater fully heated (*i.e.,* with all thermostats satisfied).

1.6. *Flow-Activated* describes an operational scheme in which a water heater initiates and terminates heating based on sensing flow.

1.7. *Heat Trap* means a device that can be integrally connected or independently attached to the hot and/or cold water pipe connections of a water heater such that the device will develop a thermal or mechanical seal to minimize the recirculation of water due to thermal convection between the water heater tank and its connecting pipes.

1.8. *Maximum GPM (L/min) Rating* means the maximum gallons per minute (liters per minute) of hot water that can be supplied by flow-activated water heater when tested in accordance with section 5.3.2 of this appendix.

1.9. *Modulating Water Heater* means a water heater that can automatically vary its power or input rate from the minimum to the maximum power or input rate specified on the nameplate of the water heater by the manufacturer.

1.10. *Rated Storage Volume* means the water storage capacity of a water heater, in gallons (liters), as certified by the manufacturer pursuant to 10 CFR part 429.

1.11. *Recovery Efficiency* means the ratio of energy delivered to the water to the energy content of the fuel consumed by the water heater.

1.12. *Recovery Period* means the time when the main burner of a water heater with a rated storage volume greater than or equal to 2 gallons is raising the temperature of the stored water.

1.13. *Standby* means the time, in hours, during which water is not being withdrawn from the water heater.

1.14. *Symbol Usage*. The following identity relationships are provided to help clarify the symbology used throughout this procedure:

C_p—specific heat of water

E_{annual}—annual energy consumption of a water heater

$E_{annual,e}$—annual electrical energy consumption of a water heater

$E_{annual,f}$—annual fossil-fuel energy consumption of a water heater

F_{hr}—first-hour rating of a non-flow activated water heater

F_{max}—maximum GPM (L/min) rating of a flow-activated water heater

i—a subscript to indicate the draw number during a test

$M_{del,i}$—mass of water removed during the ith draw of the 24-hour simulated-use test

$M_{in,i}$—mass of water entering the water heater during the ith draw of the 24-hour simulated-use test

$M^*_{del,i}$—for non-flow activated water heaters, mass of water removed during the ith draw during the first-hour rating test

$M^*_{in,i}$—for non-flow activated water heaters, mass of water entering the water heater during the ith draw during the first-hour rating test

$M_{del,10m}$—for flow-activated water heaters, mass of water removed continuously during the maximum GPM (L/min) rating test

$M_{in,10m}$—for flow-activated water heaters, mass of water entering the water heater continuously during the maximum GPM (L/min) rating test

n—for non-flow activated water heaters, total number of draws during the first-hour rating test

N—total number of draws during the 24-hour simulated-use test

N_r— number of draws from the start of the 24-hour simulated-use test to the end to the first recovery period as described in section 5.4.2

Q—total fossil fuel and/or electric energy consumed during the entire 24-hour simulated-use test

Q_d—daily water heating energy consumption adjusted for net change in internal energy

Q_{da}—Q_d with adjustment for variation of tank to ambient air temperature difference from nominal value

Q_{dm}—overall adjusted daily water heating energy consumption including Q_{da} and Q_{HWD}

Q_e—total electrical energy used during the 24-hour simulated-use test

Q_f—total fossil fuel energy used by the water heater during the 24-hour simulated-use test

Q_{hr}—hourly standby losses of a water heater with a rated storage volume greater than or equal to 2 gallons

Q_{HW}—daily energy consumption to heat water at the measured average temperature rise across the water heater

$Q_{HW,67\,°F}$—daily energy consumption to heat quantity of water removed during test over a temperature rise of 67 °F (37.3 °C)

Q_{HWD}—adjustment to daily energy consumption, Q_{HW}, due to variation of the temperature rise across the water heater not equal to the nominal value of 67 °F (37.3 °C)

Q_r—energy consumption of water heater from the beginning of the test to the end of the first recovery period

Q_{stby}—total energy consumed during the standby time interval $\tau_{stby,1,}$ as determined in section 5.4.2 of this appendix

$Q_{su,0}$— cumulative energy consumption, including all fossil fuel and electrical energy use, of the water heater from the start of the 24-hour simulated-use test to the start of the standby period as determined in section 5.4.2 of this appendix

$Q_{su,f}$—cumulative energy consumption, including all fossil fuel and electrical energy use, of the water heater from the start of the 24-hour simulated-use test to the end of the standby period as determined in section 5.4.2 of this appendix

$\bar{T}_0$—mean tank temperature at the beginning of the 24-hour simulated-use test as determined in section 5.4.2 of this appendix

$\bar{T}_{24}$—mean tank temperature at the end of the 24-hour simulated-use test as determined in section 5.4.2 of this appendix

$\bar{T}_{a,stby}$—average ambient air temperature during all standby periods of the 24-hour simulated-use test as determined in section 5.4.2 of this appendix

$\overline{T}_{a,stby,1}$—overall average ambient temperature between the start and end of the standby period as determined in section 5.4.2 of this appendix

$\overline{T}_{t,stby,1}$— overall average mean tank temperature between the start and end of the standby period as determined in section 5.4.2 of this appendix

$\overline{T}_{del}$—for flow-activated water heaters, average outlet water temperature during the maximum GPM (L/min) rating test

$\overline{T}_{del,i}$—average outlet water temperature during the *i*th draw of the 24-hour simulated-use test

$\overline{T}_{in}$—for flow-activated water heaters, average inlet water temperature during the maximum GPM (L/min) rating test

$\overline{T}_{in,i}$—average inlet water temperature during the *i*th draw of the 24-hour simulated-use test

$\overline{T}_{max,1}$—maximum measured mean tank temperature after the first recovery period of the 24-hour simulated-use test as determined in section 5.4.2 of this appendix

$\overline{T}_{su,0}$—maximum measured mean tank temperature at the beginning of the standby period as determined in section 5.4.2 of this appendix

$\overline{T}_{su,f}$—measured mean tank temperature at the end of the standby period as determined in section 5.4.2 of this appendix

$\bar{T}^{*}_{del,i}$—for non-flow activated water heaters, average outlet water temperature during the *i*th draw (i = 1 to n) of the first-hour rating test

$\bar{T}^{*}_{max,i}$—for non-flow activated water heaters, maximum outlet water temperature observed during the *i*th draw (i = 1 to n) of the first-hour rating test

$\bar{T}^{*}_{min,i}$—for non-flow activated water heaters, minimum outlet water temperature to terminate the *i*th draw (i = 1 to n) of the first-hour rating test

UA—standby loss coefficient of a water heater with a rated storage volume greater than or equal to 2 gallons

UEF—uniform energy factor of a water heater

V—the volume of hot water drawn during the applicable draw pattern

$V_{del,i}$—volume of water removed during the *i*th draw (i = 1 to N) of the 24-hour simulated-use test

$V_{in,i}$—volume of water entering the water heater during the *i*th draw (i = 1 to N) of the 24-hour simulated-use test

$V^{*}_{del,i}$—for non-flow activated water heaters, volume of water removed during the *i*th draw (i = 1 to n) of the first-hour rating test

$V^{*}_{in,i}$—for non-flow activated water heaters, volume of water entering the water heater during the *i*th draw (i = 1 to n) of the first-hour rating test

$V_{del,10m}$—for flow-activated water heaters, volume of water removed during the maximum GPM (L/min) rating test

$V_{in,10m}$—for flow-activated water heaters, volume of water entering the water heater during the maximum GPM (L/min) rating test

V_{st}—measured storage volume of the storage tank for water heaters with a rated storage volume greater than or equal to 2 gallons

W_f—weight of storage tank when completely filled with water for water heaters with a rated storage volume greater than or equal to 2 gallons

W_t—tare weight of storage tank when completely empty of water for water heaters with a rated storage volume greater than or equal to 2 gallons

η_r—recovery efficiency

ρ—density of water

$\tau_{stby,1}$—elapsed time between the start and end of the standby period as determined in section 5.4.2 of this appendix

$\tau_{stby,2}$—overall time of standby periods when no water is withdrawn during the 24-hour simulated-use test as determined in section 5.4.2 of this appendix

1.15. *Temperature controller* means a device that is available to the user to adjust the temperature of the water inside a water heater that stores heated water or the outlet water temperature.

1.16. *Uniform Energy Factor* means the measure of water heater overall efficiency.

1.17. *Water Heater Requiring a Storage Tank* means a water heater without a storage tank specified or supplied by the manufacturer that cannot meet the requirements of sections 2 and 5 of this appendix without the use of a storage water heater or unfired hot water storage tank.

2. Test Conditions.

2.1 *Installation Requirements.* Tests shall be performed with the water heater and instrumentation installed in accordance with section 4 of this appendix.

2.2 *Ambient Air Temperature and Relative Humidity.*

2.2.1 *Non-Heat Pump Water Heaters.* The ambient air temperature shall be maintained between 65.0 °F and 70.0 °F (18.3 °C and 21.1 °C) on a continuous basis.

2.2.2 *Heat Pump Water Heaters.* The dry bulb temperature shall be maintained at an average of 67.5 °F ±1 °F (19.7 °C ±0.6 °C) after a cut-in and before the next cut-out, an average of 67.5 °F ±2.5 °F (19.7 °C ±1.4 °C) after a cut-out and before the next cut-in, and at 67.5 °F ±5 °F (19.7 °C ±2.8 °C) on a continuous basis throughout the test. The

relative humidity shall be maintained within a range of 50% ±5% throughout the test, and at an average of 50% ±2% after a cut-in and before the next cut-out.

When testing a split-system heat pump water heater or heat pump water heater requiring a storage tank, the heat pump portion of the system shall be tested at the conditions within this section and the separate water heater or unfired hot water storage tank shall be tested at either the conditions within this section or the conditions specified in section 2.2.1 of this appendix.

2.3 *Supply Water Temperature.* The temperature of the water being supplied to the water heater shall be maintained at 58 °F ±2 °F (14.4 °C ±1.1 °C) throughout the test.

2.4 *Outlet Water Temperature.* The temperature controllers of a non-flow activated water heater shall be set so that water is delivered at a temperature of 125 °F ±5 °F (51.7 °C ±2.8 °C).

2.5 *Set Point Temperature.* The temperature controller of a flow-activated water heater shall be set to deliver water at a temperature of 125 °F ±5 °F (51.7 °C ±2.8 °C). If the flow-activated water heater is not capable of delivering water at a temperature of 125 °F ±5 °F (51.7 °C ±2.8 °C) when supplied with water at the supply water temperature specified in section 2.3 of this appendix, then the flow-activated water heater shall be set to deliver water at its maximum water temperature.

2.6 *Supply Water Pressure.* During the test when water is not being withdrawn, the supply pressure shall be maintained between 40 psig (275 kPa) and the maximum allowable pressure specified by the water heater manufacturer.

2.7 *Electrical and/or Fossil Fuel Supply.*

2.7.1 *Electrical.* Maintain the electrical supply voltage to within ±2% of the center of the voltage range specified on the nameplate of the water heater by the water heater and/or heat pump manufacturer, from 5 seconds after a cut-in to 5 seconds before next cut-out.

2.7.2 *Natural Gas.* Maintain the supply pressure in accordance with the supply pressure specified on the nameplate of the water heater by the manufacturer. If the supply pressure is not specified, maintain a supply pressure of 7-10 inches of water column (1.7-2.5 kPa). If the water heater is equipped with a gas appliance pressure regulator and the gas appliance pressure regulator can be adjusted, the regulator outlet pressure shall be within the greater of ±10% of the manufacturer's specified manifold pressure, found on the nameplate of the water heater, or ±0.2 inches water column (0.05 kPa). Maintain the gas supply pressure and manifold pressure only when operating at the design power rating. For all tests, use natural gas having a heating value of approximately 1,025 Btu per standard cubic foot (38,190 kJ per standard cubic meter).

2.7.3 *Propane Gas.* Maintain the supply pressure in accordance with the supply pressure specified on the nameplate of the water heater by the manufacturer. If the supply pressure is not specified, maintain a supply pressure of 11-13 inches of water column (2.7-3.2 kPa). If the water heater is equipped with a gas appliance pressure regulator and the gas appliance pressure regulator can be adjusted, the regulator outlet pressure shall be within the greater of ±10% of the manufacturer's specified manifold pressure, found on the nameplate of the water heater, or ±0.2 inches water column (0.05 kPa). Maintain the gas supply pressure and manifold pressure only when operating at the design power

rating. For all tests, use propane gas with a heating value of approximately 2,500 Btu per standard cubic foot (93,147 kJ per standard cubic meter).

2.7.4 *Fuel Oil Supply.* Maintain an uninterrupted supply of fuel oil. The fuel pump pressure shall be within ±10% of the pump pressure specified on the nameplate of the water heater or the installation and operations (I&O) manual by the manufacturer. Use fuel oil having a heating value of approximately 138,700 Btu per gallon (38,660 kJ per liter).

3. Instrumentation.

3.1 *Pressure Measurements*. Pressure-measuring instruments shall have an error no greater than the following values:

Item measured	**Instrument accuracy**	**Instrument precision**
Gas pressure	±0.1 inch of water column (±0.025 kPa)	±0.05 inch of water column (±0.012 kPa).
Atmospheric pressure	±0.1 inch of mercury column (±0.34 kPa)	±0.05 inch of mercury column (±0.17 kPa).
Water pressure	±1.0 pounds per square inch (±6.9 kPa)	±0.50 pounds per square inch (±3.45 kPa).

3.2 *Temperature Measurement*

3.2.1 *Measurement*. Temperature measurements shall be made in accordance with the Standard Method for Temperature Measurement, ASHRAE 41.1-2020, including the conditions as specified in ASHRAE 41.6-2014 as referenced in ASHRAE 41.1-2020, and excluding the steady-state temperature criteria in section 5.5 of ASHRAE 41.1-2020.

3.2.2 *Accuracy and Precision*. The accuracy and precision of the instruments, including their associated readout devices, shall be within the following limits:

Item measured	**Instrument accuracy**	**Instrument precision**
Air dry bulb temperature	±0.2 °F (±0.1 °C)	±0.1 °F (±0.06 °C).
Air wet bulb temperature	±0.2 °F (±0.1 °C)	±0.1 °F (±0.06 °C).
Inlet and outlet water temperatures	±0.2 °F (±0.1 °C)	±0.1 °F (±0.06 °C).
Storage tank temperatures	±0.5 °F (±0.3 °C)	±0.25 °F (±0.14 °C).

3.2.3 *Scale Division.* In no case shall the smallest scale division of the instrument or instrument system exceed 2 times the specified precision.

3.2.4 *Temperature Difference.* Temperature difference between the entering and leaving water may be measured with any of the following:

(a) A thermopile

(b) Calibrated resistance thermometers

(c) Precision thermometers

(d) Calibrated thermistors

(e) Calibrated thermocouples

(f) Quartz thermometers

3.2.5 *Thermopile Construction.* If a thermopile is used, it shall be made from calibrated thermocouple wire taken from a single spool. Extension wires to the recording device shall also be made from that same spool.

3.2.6 *Time Constant.* The time constant of the instruments used to measure the inlet and outlet water temperatures shall be no greater than 2 seconds.

3.3 *Liquid Flow Rate Measurement.* The accuracy of the liquid flow rate measurement, using the calibration if furnished, shall be equal to or less than ±1% of the measured value in mass units per unit time.

3.4 *Electrical Energy.* The electrical energy used shall be measured with an instrument and associated readout device that is accurate within ±0.5% of the reading.

3.5 *Fossil Fuels.* The quantity of fuel used by the water heater shall be measured with an instrument and associated readout device that is accurate within ±1% of the reading.

3.6 *Mass Measurements.* For mass measurements greater than or equal to 10 pounds (4.5 kg), a scale that is accurate within ±0.5% of the reading shall be used to make the measurement. For mass measurements less than 10 pounds (4.5 kg), the scale shall provide a measurement that is accurate within ±0.1 pound (0.045 kg).

3.7 *Heating Value.* The higher heating value of the natural gas, propane, or fuel oil shall be measured with an instrument and associated readout device that is accurate within ±1% of the reading. The heating values of natural gas and propane must be corrected from those measured to the standard temperature of 60.0 °F (15.6 °C) and standard pressure of 30 inches of mercury column (101.6 kPa) using the method described in Annex B of [*ASHRAE 118.2-TBD*].

3.8 *Time.* The elapsed time measurements shall be measured with an instrument that is accurate within ±0.5 seconds per hour.

3.9 *Volume.* Volume measurements shall be measured with an accuracy of ±2% of the total volume.

3.10 *Relative Humidity.* If a relative humidity (RH) transducer is used to measure the relative humidity of the surrounding air while testing heat pump water heaters, the relative humidity shall be measured with an accuracy of ±1.5% RH.

4. Installation.

4.1 *Water Heater Mounting.* A water heater designed to be freestanding shall be placed on a 3⁄4 inch (2 cm) thick plywood platform supported by three 2×4 inch (5 cm×10 cm) runners. If the water heater is not approved for installation on combustible flooring, suitable non-combustible material shall be placed between the water heater and the platform. Water heaters designed to be installed into a kitchen countertop space shall be placed against a simulated wall section. Wall-mounted water heaters shall be supported on a simulated wall in accordance with the manufacturer-published installation instructions. When a simulated wall is used, the construction shall be 2×4 inch (5 cm×10 cm) studs, faced with 3⁄4 inch (2 cm) plywood. For heat pump water heaters not delivered as a single package, the units shall be connected in accordance with the manufacturer-published installation instructions and the overall system shall be placed on the above-described plywood platform. If installation instructions are not provided by the heat pump manufacturer, uninsulated 8 foot (2.4 m) long connecting hoses having an inside diameter of 5⁄8 inch (1.6 cm) shall be used to connect the storage tank and the heat pump water heater. With the exception of using the storage tank described in 4.10, the same requirements shall apply for water heaters requiring a storage tank. The testing of the water heater shall occur in an area that is protected from drafts of more than 50 ft/min

(0.25 m/s) from room ventilation registers, windows, or other external sources of air movement.

4.2 *Water Supply.* Connect the water heater to a water supply capable of delivering water at conditions as specified in sections 2.3 and 2.6 of this appendix.

4.3 *Water Inlet and Outlet Configuration.* For freestanding water heaters that are taller than 36 inches (91.4 cm), inlet and outlet piping connections shall be configured in a manner consistent with Figures 1 and 2 of section 6.4.7 of this appendix. Inlet and outlet piping connections for wall-mounted water heaters shall be consistent with Figure 3 of section 6.4.7 of this appendix. For freestanding water heaters that are 36 inches or less in height and not supplied as part of a counter-top enclosure (commonly referred to as an under-the-counter model), inlet and outlet piping shall be installed in a manner consistent with Figures 4, 5, or 6 of section 6.4.7 of this appendix. For water heaters that are supplied with a counter-top enclosure, inlet and outlet piping shall be made in a manner consistent with Figures 7a and 7b of section 6.4.7 of this appendix, respectively. The vertical piping noted in Figures 7a and 7b shall be located (whether inside the enclosure or along the outside in a recessed channel) in accordance with the manufacturer-published installation instructions.

All dimensions noted in Figures 1 through 7 of section 6.4.7 of this appendix must be achieved. All piping between the water heater and inlet and outlet temperature sensors, noted as T_{IN} and T_{OUT} in the figures, shall be Type "L" hard copper having the same diameter as the connections on the water heater. Unions may be used to facilitate installation and removal of the piping arrangements. Install a pressure gauge and diaphragm expansion tank in the supply water piping at a location upstream of the inlet

temperature sensor. Install an appropriately rated pressure and temperature relief valve on all water heaters at the port specified by the manufacturer. Discharge piping for the relief valve must be non-metallic. If heat traps, piping insulation, or pressure relief valve insulation are supplied with the water heater, they must be installed for testing. Except when using a simulated wall, provide sufficient clearance such that none of the piping contacts other surfaces in the test room.

At the discretion of the test lab, the mass or water delivered may be measured on either the inlet or outlet of the water heater.

For water heaters designed to be used with a mixing valve and that do not have a self-contained mixing valve, a mixing valve shall be installed according to the water heater and/or mixing valve manufacturer's installation instructions. If permitted by the water heater and mixing valve manufacturer's instructions, the mixing valve and cold water junction may be installed where the elbows are located in the outlet and inlet line, respectively. If there are no installation instructions for the mixing valve in the water heater or mixing valve manufacturer's instructions, then the mixing valve shall be installed on the outlet line and the cold water shall be supplied from the inlet line from a junction installed downstream from the location where the inlet water temperature is measured. The outlet water temperature, water flow rate, and/or mass measuring instrumentation, if installed on the outlet side of the water heater, shall be installed downstream from the mixing valve.

4.4 *Fuel and/or Electrical Power and Energy Consumption.* Install one or more instruments that measure, as appropriate, the quantity and rate of electrical energy and/or fossil fuel consumption in accordance with section 3 of this appendix.

4.5 *Internal Storage Tank Temperature Measurements.* For water heaters with rated storage volumes greater than or equal to 20 gallons, install six temperature measurement sensors inside the water heater tank with a vertical distance of at least 4 inches (100 mm) between successive sensors. For water heaters with rated storage volumes between 2 and 20 gallons, install three temperature measurement sensors inside the water heater tank. Position a temperature sensor at the vertical midpoint of each of the six equal volume nodes within a tank larger than 20 gallons or the three equal volume nodes within a tank between 2 and 20 gallons. Nodes designate the equal volumes used to evenly partition the total volume of the tank. As much as is possible, the temperature sensor should be positioned away from any heating elements, anodic protective devices, tank walls, and flue pipe walls. If the tank cannot accommodate six temperature sensors and meet the installation requirements specified in this section, install the maximum number of sensors that comply with the installation requirements. Install the temperature sensors through:

(a) The anodic device opening;

(b) The relief valve opening; or

(c) The hot water outlet.

If installed through the relief valve opening or the hot water outlet, a tee fitting or outlet piping, as applicable, must be installed as close as possible to its original location. If the relief valve temperature sensor is relocated, and it no longer extends into the top of the tank, install a substitute relief valve that has a sensing element that can reach into the tank. If the hot water outlet includes a heat trap, install the heat trap on top of the tee fitting. Cover any added fittings with thermal insulation having an R value between 4 and

8 $h \cdot ft^2 \cdot$ °F/Btu (0.7 and 1.4 $m^2 \cdot$ °C/W). If temperature measurement sensors cannot be installed within the water heater, follow the alternate procedures in section 5.4.2 of this appendix.

4.6 *Ambient Air Temperature Measurement.* Install an ambient air temperature sensor at the vertical midpoint of the water heater and approximately 2 feet (610 mm) from the surface of the water heater. Shield the sensor against radiation.

4.7 *Inlet and Outlet Water Temperature Measurements.* Install temperature sensors in the cold-water inlet pipe and hot-water outlet pipe as shown in Figures 1, 2, 3, 4, 5, 6, 7a, and 7b of section 6.4.7 of this appendix, as applicable.

4.8 *Flow Control.* Install a valve or valves to provide flow as specified in sections 5.3 and 5.4 of this appendix.

4.9 *Flue Requirements.*

4.9.1 *Gas-Fired Water Heaters.* Establish a natural draft in the following manner. For gas-fired water heaters with a vertically discharging draft hood outlet, connect to the draft hood outlet a 5-foot (1.5-meter) vertical vent pipe extension with a diameter equal to the largest flue collar size of the draft hood. For gas-fired water heaters with a horizontally discharging draft hood outlet, connect to the draft hood outlet a 90-degree elbow with a diameter equal to the largest flue collar size of the draft hood, connect a 5-foot (1.5-meter) length of vent pipe to that elbow, and orient the vent pipe to discharge vertically upward. Install direct-vent gas-fired water heaters with venting equipment specified by the manufacturer in the I&O manual using the minimum vertical and horizontal lengths of vent pipe recommended by the manufacturer.

4.9.2 *Oil-Fired Water Heaters.* Establish a draft at the flue collar at the value specified by the manufacturer in the I&O manual. Establish the draft by using a sufficient length of vent pipe connected to the water heater flue outlet, and directed vertically upward. For an oil-fired water heater with a horizontally discharging draft hood outlet, connect to the draft hood outlet a 90-degree elbow with a diameter equal to the largest flue collar size of the draft hood, connect to the elbow fitting a length of vent pipe sufficient to establish the draft, and orient the vent pipe to discharge vertically upward. Direct-vent oil-fired water heaters should be installed with venting equipment as specified by the manufacturer in the I&O manual, using the minimum vertical and horizontal lengths of vent pipe recommended by the manufacturer.

4.10 *Additional Storage Tank.* When testing a water heater requiring a storage tank, the tank to be used for testing shall be an unfired hot water storage tank having a measured volume of 80.0 gallons ±1.0 gallon (178 liters ±3.8 liters) which meets the energy conservation standards for an unfired hot water storage tank at 10 CFR 431.110(a).

4.11 *External Communication*. If the water heater can connect to an external network or controller, this communication shall be disabled for the duration of testing.

5. Test Procedures.

5.1 *Operational Mode Selection.* For water heaters that allow for multiple user-selected operational modes, all procedures specified in this appendix shall be carried out with the water heater in the same operational mode (*i.e.,* only one mode). This operational mode shall be the default mode (or similarly named, suggested mode for normal operation) as defined by the manufacturer in the I&O manual for giving selection

guidance to the consumer. For heat pump water heaters, if a default mode is not defined in the product literature, each test shall be conducted under an operational mode in which both the heat pump and any electric resistance backup heating element(s) are activated by the unit's control scheme, and which can achieve the internal storage tank temperature specified in this test procedure; if multiple operational modes meet these criteria, the water heater shall be tested under the most energy-intensive mode. If no default mode is specified and the unit does not offer an operational mode that utilizes both the heat pump and the electric resistance backup heating element(s), the first-hour rating test and the 24-hour simulated-use test shall be tested in heat-pump-only mode. For other types of water heaters where a default mode is not specified, test the unit in all modes and rate the unit using the results of the most energy-intensive mode.

5.2 *Water Heater Preparation.*

5.2.1 *Determination of Storage Tank Volume.* For water heaters with a rated storage volume greater than or equal to 2 gallons, determine the storage capacity, V_{st}, of the water heater under test, in gallons (liters), by subtracting the tare weight, W_t, (measured while the tank is empty) from the gross weight of the storage tank when completely filled with water at the supply water temperature specified in section 2.3 of this appendix, W_f, (with all air eliminated and line pressure applied as described in section 2.6 of this appendix) and dividing the resulting net weight by the density of water at the measured temperature.

5.2.2 *Setting the Outlet Discharge Temperature.*

5.2.2.1 *Flow-Activated Water Heaters, including certain instantaneous water heaters and certain storage-type water heaters.* Initiate normal operation of the water

heater at the design power rating. Monitor the discharge water temperature and set to the value specified in section 2.5 of this appendix in accordance with the manufacturer's I&O manual. If the water heater is not capable of providing this discharge temperature when the flow rate is 1.7 gallons ±0.25 gallons per minute (6.4 liters ±0.95 liters per minute), then adjust the flow rate as necessary to achieve the specified discharge water temperature. Once the proper temperature control setting is achieved, the setting must remain fixed for the duration of the maximum GPM test and the 24-hour simulated-use test.

5.2.2.2 *Non-Flow Activated Water Heaters, including certain instantaneous water heaters and certain storage-type water heaters.*

5.2.2.2.1 *Tanks with a Single Temperature Controller.*

5.2.2.2.1.1 *Water Heaters with Rated Volumes Less than 20 Gallons.* Starting with a tank at the supply water temperature as specified in section 2.3 of this appendix, initiate normal operation of the water heater. After cut-out, initiate a draw from the water heater at a flow rate of 1.0 gallon ±0.25 gallons per minute (3.8 liters ±0.95 liters per minute) for 2 minutes. Starting 15 seconds after commencement of the draw, record the outlet temperature at 15-second intervals until the end of the 2-minute period. Determine whether the maximum outlet temperature is within the range specified in section 2.4 of this appendix. If not, turn off the water heater, adjust the temperature controller, and then drain and refill the tank with supply water at the temperature specified in section 2.3 of this appendix. Then, once again, initiate normal operation of the water heater, and repeat the 2-minute outlet temperature test following cut-out. Repeat this sequence until the maximum outlet temperature during the 2-minute test is within the range specified in

section 2.4 of this appendix. Once the proper temperature control setting is achieved, the setting must remain fixed for the duration of the first-hour rating test and the 24-hour simulated-use test such that a second identical 24-hour simulated-use test run immediately following the one specified in section 5.4 of this appendix would result in average delivered water temperatures that are within the bounds specified in section 2.4 of this appendix.

5.2.2.2.1.2 *Water Heaters with Rated Volumes Greater than or Equal to 20 Gallons.* Starting with a tank at the supply water temperature specified in section 2.3 of this appendix, initiate normal operation of the water heater. After cut-out, initiate a draw from the water heater at a flow rate of 1.7 gallons ±0.25 gallons per minute (6.4 liters ±0.95 liters per minute) for 5 minutes. Starting 15 seconds after commencement of the draw, record the outlet temperature at 15-second intervals until the end of the 5-minute period. Determine whether the maximum outlet temperature is within the range specified in section 2.4 of this appendix. If not, turn off the water heater, adjust the temperature controller, and then drain and refill the tank with supply water at the temperature specified in section 2.3 of this appendix. Then, once again, initiate normal operation of the water heater, and repeat the 5-minute outlet temperature test following cut-out. Repeat this sequence until the maximum outlet temperature during the 5-minute test is within the range specified in section 2.4 of this appendix. Once the proper temperature control setting is achieved, the setting must remain fixed for the duration of the first-hour rating test and the 24-hour simulated-use test such that a second identical 24-hour simulated-use test run immediately following the one specified in section 5.4 of this appendix would result in average delivered water temperatures that are within the bounds specified in section 2.4 of this appendix.

5.2.2.2.2 *Tanks with Two or More Temperature Controllers.* Verify the temperature controller set-point while removing water in accordance with the procedure set forth for the first-hour rating test in section 5.3.3 of this appendix. The following criteria must be met to ensure that all temperature controllers are set to deliver water in the range specified in section 2.4 of this appendix:

(a) At least 50 percent of the water drawn during the first draw of the first-hour rating test procedure shall be delivered at a temperature within the range specified in section 2.4 of this appendix.

(b) No water is delivered above the range specified in section 2.4 of this appendix during first-hour rating test.

(c) The delivery temperature measured 15 seconds after commencement of each draw begun prior to an elapsed time of 60 minutes from the start of the test shall be within the range specified in section 2.4 of this appendix.

(i) If these conditions are not met, turn off the water heater, adjust the temperature controllers, and then drain and refill the tank with supply water at the temperature specified in section 2.3 of this appendix. Repeat the procedure described at the start of section 5.2.2.2.2 of this appendix until the criteria for setting the temperature controllers is met.

(ii) If the conditions stated above are met, the data obtained during the process of verifying the temperature control set-points may be used in determining the first-hour rating provided that all other conditions and methods required in sections 2 and 5.2.4 of this appendix in preparing the water heater were followed.

5.2.3 *Power Input Determination.* For all water heaters except electric types, initiate normal operation (as described in section 5.1 of this appendix) and determine the power input, P, to the main burners (including pilot light power, if any) after 15 minutes of operation. Adjust all burners to achieve an hourly Btu (kJ) rating that is within ±2% of the maximum input rate value specified by the manufacturer. For an oil-fired water heater, adjust the burner to give a CO_2 reading recommended by the manufacturer and an hourly Btu (kJ) rating that is within ±2% of the maximum input rate specified by the manufacturer. Smoke in the flue may not exceed No. 1 smoke as measured by the procedure in ASTM D2156 (RA 2018) , including the conditions as specified in ASTM E97-1987 (W1991) as referenced in ASTM D2156 (RA 2018) . If the input rating is not within ±2%, first increase or decrease the fuel pressure within the tolerances specified in section 2.7.2, 2.7.3 or 2.7.4 (as applicable) of this appendix until it is ± 2% of the maximum input rate value specified by the manufacturer. If, after adjusting the fuel pressure, the fuel input rate cannot be achieved within ±2 percent of the maximum input rate value specified by the manufacturer, for gas-fired models increase or decrease the gas supply pressure within the range specified by the manufacturer. Finally, if the measured fuel input rate is still not within ±2 percent of the maximum input rate value specified by the manufacturer, modify the gas inlet orifice, if so equipped, as necessary to achieve a fuel input rate that is within ±2 percent of the maximum input rate value specified by the manufacturer.

5.2.4 *Soak-In Period for Water Heaters with Rated Storage Volumes Greater than or Equal to 2 Gallons.* For water heaters with a rated storage volume greater than or equal to 2 gallons (7.6 liters) , the water heater must sit filled with water, connected to a power source, and without any draws taking place for at least 12 hours after initially

being energized so as to achieve the nominal temperature set-point within the tank and with the unit connected to a power source.

5.3 *Delivery Capacity Tests.*

5.3.1 *General.* For flow-activated water heaters, conduct the maximum GPM test, as described in section 5.3.2, Maximum GPM Rating Test for Flow-Activated Water Heaters, of this appendix. For all other water heaters, conduct the first-hour rating test as described in section 5.3.3 of this appendix.

5.3.2 *Maximum GPM Rating Test for Flow-Activated Water Heaters.* Establish normal water heater operation at the design power rating with the discharge water temperature set in accordance with section 5.2.2.1 of this appendix.

For this 10-minute test, either collect the withdrawn water for later measurement of the total mass removed or use a water meter to directly measure the water mass of volume removed. Initiate water flow through the water heater and record the inlet and outlet water temperatures beginning 15 seconds after the start of the test and at subsequent 5-second intervals throughout the duration of the test. At the end of 10 minutes, turn off the water. Determine and record the mass of water collected, M_{10m}, in pounds (kilograms), or the volume of water, V_{10m}, in gallons (liters).

5.3.3 *First-Hour Rating Test.*

5.3.3.1 *General.* During hot water draws for non-flow activated water heaters with rated storage volumes greater than or equal to 20 gallons, remove water at a rate of 3.0 ±0.25 gallons per minute (11.4 ±0.95 liters per minute). During hot water draws for

non-flow activated water heaters with rated storage volumes below 20 gallons, remove water at a rate of 1.5 ±0.25 gallon per minute (5.7 ±0.95 liters per minute). Collect the water in a container that is large enough to hold the volume removed during an individual draw and is suitable for weighing at the termination of each draw to determine the total volume of water withdrawn. As an alternative to collecting the water, a water meter may be used to directly measure the water mass or volume withdrawn during each draw.

5.3.3.2 *Draw Initiation Criteria.* Begin the first-hour rating test by starting a draw on the non-flow activated water heater. After completion of this first draw, initiate successive draws based on the following criteria. For gas-fired and oil-fired water heaters, initiate successive draws when the temperature controller acts to reduce the supply of fuel to the main burner. For electric water heaters having a single element or multiple elements that all operate simultaneously, initiate successive draws when the temperature controller acts to reduce the electrical input supplied to the element(s). For electric water heaters having two or more elements that do not operate simultaneously, initiate successive draws when the applicable temperature controller acts to reduce the electrical input to the energized element located vertically highest in the storage tank. For heat pump water heaters that do not use supplemental, resistive heating, initiate successive draws immediately after the electrical input to the compressor is reduced by the action of the water heater's temperature controller. For heat pump water heaters that use supplemental resistive heating, initiate successive draws immediately after the electrical input to the first of either the compressor or the vertically highest resistive element is reduced by the action of the applicable water heater temperature controller. This draw initiation criterion for heat pump water heaters that use supplemental resistive heating, however, shall only apply when the water located above the thermostat at cut-out

is heated to within the range specified in section 2.4 of this appendix. If this criterion is not met, then the next draw should be initiated once the heat pump compressor cuts out.

5.3.3.3 *Test Sequence.* Establish normal water heater operation. If the water heater is not presently operating, initiate a draw. The draw may be terminated any time after cut-in occurs. After cut-out occurs (*i.e.,* all temperature controllers are satisfied), if the water heater can have its internal tank temperatures measured, record the internal storage tank temperature at each sensor described in section 4.5 of this appendix every one minute, and determine the mean tank temperature by averaging the values from these sensors.

(a) Initiate a draw after a maximum mean tank temperature (the maximum of the mean temperatures of the individual sensors) has been observed following a cut-out. If the water heater cannot have its internal tank temperatures measured, wait 5 minutes after cut-out. Record the time when the draw is initiated and designate it as an elapsed time of zero ($\tau^* = 0$). (The superscript * is used to denote variables pertaining to the first-hour rating test). Record the outlet water temperature beginning 15 seconds after the draw is initiated and at 5-second intervals thereafter until the draw is terminated. Determine the maximum outlet temperature that occurs during this first draw and record it as $T^*_{max,1}$. For the duration of this first draw and all successive draws, in addition, monitor the inlet temperature to the water heater to ensure that the required supply water temperature test condition specified in section 2.3 of this appendix is met. Terminate the hot water draw when the outlet temperature decreases to $T^*_{max,1} - 15$ °F ($T^*_{max,1} - 8.3$ °C). (Note, if the outlet temperature does not decrease to $T^*_{max,1} - 15$ °F ($T^*_{max,1} - 8.3$ °C) during the draw, then hot water would be drawn continuously for the duration of the test. In this instance, the test would end when the temperature decreases to $T^*_{max,1} - 15$ °F ($T^*_{max,1} -$ 8.3 °C) after the electrical power and/or fuel supplied to the water heater is shut off, as

described in the following paragraphs.) Record this temperature as $T^*_{min,1}$. Following draw termination, determine the average outlet water temperature and the mass or volume removed during this first draw and record them as $\overline{T}^*_{del,i}$ and M^*_1 or V^*_1, respectively.

(b) Initiate a second and, if applicable, successive draw(s) each time the applicable draw initiation criteria described in section 5.3.3.2 of this appendix are satisfied. As required for the first draw, record the outlet water temperature 15 seconds after initiating each draw and at 5-second intervals thereafter until the draw is terminated. Determine the maximum outlet temperature that occurs during each draw and record it as $T^*_{max,i}$, where the subscript i refers to the draw number. Terminate each hot water draw when the outlet temperature decreases to $T^*_{max,i} - 15$ °F ($T^*_{max,i} - 8.3$ °C). Record this temperature as $T^*_{min,i}$. Calculate and record the average outlet temperature and the mass or volume removed during each draw ($\overline{T}^*_{del,i}$ and M^*_i or V^*_i, respectively). Continue this sequence of draw and recovery until one hour after the start of the test, then shut off the electrical power and/or fuel supplied to the water heater.

(c) If a draw is occurring at one hour from the start of the test, continue this draw until the outlet temperature decreases to $T^*_{max,n} - 15$ °F ($T^*_{max,n} - 8.3$ °C), at which time the draw shall be immediately terminated. (The subscript n shall be used to denote measurements associated with the final draw.) If a draw is not occurring one hour after the start of the test, initiate a final draw at one hour, regardless of whether the criteria described in section 5.3.3.2 of this appendix are satisfied. This draw shall proceed for a minimum of 30 seconds and shall terminate when the outlet temperature first indicates a value less than or equal to the cut-off temperature used for the previous draw ($T^*_{min,n}-1$). If an outlet temperature greater than $T^*_{min,n-1}$ is not measured within 30 seconds of initiation of the draw, zero additional credit shall be given towards first-hour rating (*i.e.,*

$M^*_n = 0$ or $V^*_n = 0$) based on the final draw. After the final draw is terminated, calculate and record the average outlet temperature and the mass or volume removed during the final draw ($\overline{T}^*_{del,n}$ and M^*_n or V^*_n, respectively).

5.4 *24-Hour Simulated-Use Test.*

5.4.1 *Selection of Draw Pattern.* The water heater will be tested under a draw profile that depends upon the first-hour rating obtained following the test prescribed in section 5.3.3 of this appendix, or the maximum GPM rating obtained following the test prescribed in section 5.3.2 of this appendix, whichever is applicable. For water heaters that have been tested according to the first-hour rating procedure, one of four different patterns shall be applied based on the measured first-hour rating, as shown in Table I of this section. For water heater that have been tested according to the maximum GPM rating procedure, one of four different patterns shall be applied based on the maximum GPM, as shown in Table II of this section.

Table I—Draw Pattern To Be Used Based on First-Hour Rating

First-hour rating greater than or equal to:	... and first-hour rating less than:	Draw pattern to be used in the 24-hour simulated-use test
0 gallons	18 gallons	Very-Small-Usage (Table III.1).
18 gallons	51 gallons	Low-Usage (Table III.2).
51 gallons	75 gallons	Medium-Usage (Table III.3).
75 gallons	No upper limit	High-Usage (Table III.4).

Table II—Draw Pattern To Be Used Based on Maximum GPM Rating

Maximum GPM rating greater than or equal to:	and maximum GPM rating less than:	Draw pattern to be used in the 24-hour simulated-use test
0 gallons/minute	1.7 gallons/minute	Very-Small-Usage (Table III.1).
1.7 gallons/minute	2.8 gallons/minute	Low-Usage (Table III.2).
2.8 gallons/minute	4 gallons/minute	Medium-Usage (Table III.3).
4 gallons/minute	No upper limit	High-Usage (Table III.4).

The draw patterns are provided in Tables III.1 through III.4 in section 5.5 of this appendix. Use the appropriate draw pattern when conducting the test sequence provided

in section 5.4.2 of this appendix for water heaters with rated storage volumes greater than or equal to 2 gallons or section 5.4.3 of this appendix for water heaters with rated storage volumes less than 2 gallons.

5.4.2 *Test Sequence for Water Heaters with Rated Storage Volumes Greater Than or Equal to 2 Gallons.*

If the water heater is turned off, fill the water heater with supply water at the temperature specified in section 2.3 of this appendix and maintain supply water pressure as described in section 2.6 of this appendix. Turn on the water heater and associated heat pump unit, if present. If turned on in this fashion, the soak-in period described in section 5.2.4 of this appendix shall be implemented. If the water heater has undergone a first-hour rating test prior to conduct of the 24-hour simulated-use test, allow the water heater to fully recover after completion of that test such that the main burner, heating elements, or heat pump compressor of the water heater are no longer raising the temperature of the stored water. In all cases, the water heater shall sit idle for 1 hour prior to the start of the 24-hour test; during which time no water is drawn from the unit and there is no energy input to the main heating elements, heat pump compressor, and/or burners. At the end of this period, the 24-hour simulated-use test will begin.

For water heaters that can have their internal storage tank temperature measured, one minute prior to the start of the 24-hour test simulated-use test, record the mean tank temperature ($\overline{T_0}$). For water heaters that cannot have their internal tank temperatures measured, the mean tank temperature at the start of the 24-hour simulated-use test ($\overline{T_0}$) is the average of the supply and outlet water temperatures measured 5 seconds after the start of the first draw of the test.

At the start of the 24-hour simulated-use test, record the electrical and/or fuel measurement readings, as appropriate. Begin the 24-hour simulated-use test by withdrawing the volume specified in the appropriate table in section 5.5 of this appendix (*i.e.,* Table III.1, Table III.2, Table III.3, or Table III.4, depending on the first-hour rating or maximum GPM rating) for the first draw at the flow rate specified in the applicable table. Record the time when this first draw is initiated and assign it as the test elapsed time (τ) of zero (0). Record the average storage tank and ambient temperature every minute throughout the 24-hour simulated-use test. At the elapsed times specified in the applicable draw pattern table in section 5.5 of this appendix for a particular draw pattern, initiate additional draws pursuant to the draw pattern, removing the volume of hot water at the prescribed flow rate specified by the table. The maximum allowable deviation from the specified volume of water removed for any single draw taken at a nominal flow rate of 1 GPM or 1.7 GPM is ±0.1 gallons (±0.4 liters). The maximum allowable deviation from the specified volume of water removed for any single draw taken at a nominal flow rate of 3 GPM is ±0.25 gallons (0.9 liters). The quantity of water withdrawn during the last draw shall be increased or decreased as necessary such that the total volume of water withdrawn equals the prescribed daily amount for that draw pattern ±1.0 gallon (±3.8 liters). If this adjustment to the volume drawn during the last draw results in no draw taking place, the test is considered invalid.

All draws during the 24-hour simulated-use test shall be made at the flow rates specified in the applicable draw pattern table in section 5.5 of this appendix, within a tolerance of ±0.25 gallons per minute (±0.9 liters per minute). Measurements of the inlet and outlet temperatures shall be made 15 seconds after the draw is initiated and at every subsequent 3-second interval throughout the duration of each draw. Calculate and record the mean of the hot water discharge temperature and the cold water inlet temperature for

each draw $\overline{T}_{del,i}$ and $\overline{T}_{in,i}$). Determine and record the net mass or volume removed (M_i or V_i), as appropriate, after each draw.

The first recovery period is the time from the start of the 24-hour simulated-use test and continues during the temperature rise of the stored water until the first cut-out; if the cut-out occurs during a subsequent draw, the first recovery period includes the time until the draw of water from the tank stops. If, after the first cut-out occurs but during a subsequent draw, a subsequent cut-in occurs prior to the draw completion, the first recovery period includes the time until the subsequent cut-out occurs, prior to another draw. The first recovery period may continue until a cut-out occurs when water is not being removed from the water heater or a cut-out occurs during a draw and the water heater does not cut-in prior to the end of the draw.

At the end of the first recovery period, record the maximum mean tank temperature observed after cut-out ($\overline{T}_{max,1}$). For water heaters that cannot have their internal storage tank temperatures measured, the maximum mean tank temperature after the first recovery period ($\overline{T}_{max,1}$) is the average of the final inlet and outlet water temperature measurements of the first draw. At the end of the first recovery period, record the total energy consumed by the water heater from the beginning of the test (Q_r), including all fossil fuel and/or electrical energy use, from the main heat source and auxiliary equipment including, but not limited to, burner(s), resistive elements(s), compressor, fan, controls, pump, etc., as applicable.

The start of the portion of the test during which the standby loss coefficient is determined depends upon whether the unit has fully recovered from the first draw cluster. For water heaters than can have their internal storage tank temperatures measured, if a

recovery is occurring at or within five minutes after the end of the final draw in the first draw cluster, as identified in the applicable draw pattern table in section 5.5 of this appendix, then the standby period starts when a maximum mean tank temperature is observed starting five minutes after the end of the recovery period that follows that draw. If a recovery does not occur at or within five minutes after the end of the final draw in the first draw cluster, as identified in the applicable draw pattern table in section 5.5 of this appendix, then the standby period starts five minutes after the end of that draw. For water heaters that cannot have their internal storage tank temperatures measured, the start of the standby period is at the final measurement of the last draw of the first draw cluster. Determine and record the total electrical energy and/or fossil fuel consumed from the beginning of the test to the start of the standby period ($Q_{su,0}$).

In preparation for determining the energy consumed during standby, record the reading given on the electrical energy (watt-hour) meter, the gas meter, and/or the scale used to determine oil consumption, as appropriate. Record the mean tank temperature at the start of the standby period ($\overline{T}_{su,0}$). For water heaters that cannot have their internal storage tank temperatures measured, the mean tank temperature at the start of the standby period ($\overline{T}_{su,0}$) is the average of the final measured inlet and outlet water temperature from the last draw of the first draw cluster. At 1-minute intervals, record ambient temperature, the electric and/or fuel instrument readings, and, for water heaters that can have their internal storage tank temperatures measured, the mean tank temperature until the next draw is initiated. The end of the standby period is when the final mean tank temperature is recorded, as described. For water heaters that can have their internal storage tank temperatures measured, just prior to initiation of the next draw, record the mean tank temperature ($\overline{T}_{su,f}$). If the water heater is undergoing recovery when the next draw is initiated, record the mean tank temperature ($\overline{T}_{su,f}$) at the minute prior to the start of the

recovery. For water heaters that cannot have their internal storage tank temperatures measured, the mean tank temperature at the end of the standby period ($\overline{T}_{su,f}$) is the average of the inlet and outlet water temperatures measured 5 seconds after the start of the next draw. Determine the total electrical energy and/or fossil fuel energy consumption from the beginning of the test to the end of the standby period ($Q_{su,f}$). Record the time interval between the start of the standby period and the end of the standby period ($\tau_{stby,1}$).

Following the final draw of the prescribed draw pattern and subsequent recovery, allow the water heater to remain in the standby mode until exactly 24 hours have elapsed since the start of the 24-hour simulated-use test (*i.e.,* since $\tau = 0$). During the last hour of the 24-hour simulated-use test (*i.e.,* hour 23 of the 24-hour simulated-use test), power to the main burner, heating element, or compressor shall be disabled. At 24 hours, record the reading given by the gas meter, oil meter, and/or the electrical energy meter as appropriate. Determine the fossil fuel and/or electrical energy consumed during the entire 24-hour simulated-use test and designate the quantity as Q. For water heaters that cannot have their internal storage tank temperatures measured, at hour 24 initiate a draw at the flow rate of the first draw of the draw pattern determined as described in section 5.4.1 of this appendix. The mean tank temperature at hour 24 ($\overline{T}_{24}$) is the average of the inlet and outlet water temperatures measured 5 seconds after the start of the draw.

In the event that the recovery period continues from the end of the last draw of the first draw cluster until the subsequent draw, the standby period will start after the end of the first recovery period after the last draw of the 24-hour simulated-use test, when the temperature reaches the maximum mean tank temperature, though no sooner than five minutes after the end of this recovery period. The standby period shall last eight hours, so testing may extend beyond the 24-hour duration of the 24-hour simulated-use test.

Determine and record the total electrical energy and/or fossil fuel consumed from the beginning of the 24-hour simulated-use test to the start of the 8-hour standby period ($Q_{su,0}$). In preparation for determining the energy consumed during standby, record the reading(s) given on the electrical energy (watt-hour) meter, the gas meter, and/or the scale used to determine oil consumption, as appropriate. Record the mean tank temperature at the start of the standby period ($\overline{T}_{su,0}$). Record the mean tank temperature, the ambient temperature, and the electric and/or fuel instrument readings at 1-minute intervals until the end of the 8-hour period. Record the mean tank temperature at the end of the 8-hour standby period ($\overline{T}_{su,f}$). If the water heater is undergoing recovery at the end of the standby period, record the mean tank temperature ($\overline{T}_{su,f}$) at the minute prior to the start of the recovery, which will mark the end of the standby period. Determine the total electrical energy and/or fossil fuel energy consumption from the beginning of the test to the end of the standby period ($Q_{su,f}$). Record the time interval between the start of the standby period and the end of the standby period as $\tau_{stby,1}$. Record the average ambient temperature from the start of the standby period to the end of the standby period ($\overline{T}_{a,stby,1}$). Record the average mean tank temperature from the start of the standby period to the end of the standby period ($\overline{T}_{t,stby,1}$).

If the standby period occurred at the end of the first recovery period after the last draw of the 24-hour simulated-use test, allow the water heater to remain in the standby mode until exactly 24 hours have elapsed since the start of the 24-hour simulated-use test (*i.e.,* since $\tau = 0$) or the end of the standby period, whichever is longer. At 24 hours, record the mean tank temperature ($\overline{T}_{24}$) and the reading given by the gas meter, oil meter, and/or the electrical energy meter as appropriate. If the water heater is undergoing a recovery at 24 hours, record the reading given by the gas meter, oil meter, and/or electrical energy meter, as appropriate, and the mean tank temperature ($\overline{T}_{24}$) at the minute

prior to the start of the recovery. Determine the fossil fuel and/or electrical energy consumed during the 24 hours and designate the quantity as Q.

Record the time during which water is not being withdrawn from the water heater during the entire 24-hour period ($\tau_{stby,2}$). When the standby period occurs after the last draw of the 24-hour simulated-use test, the test may extend past hour 24. When this occurs, the measurements taken after hour 24 apply only to the calculations of the standby loss coefficient. All other measurements during the time between hour 23 and hour 24 remain the same.

5.4.3 *Test Sequence for Water Heaters with Rated Storage Volume Less Than 2 Gallons.*

Establish normal operation with the discharge water temperature at 125 °F ±5 °F (51.7 °C ±2.8 °C) and set the flow rate as determined in section 5.2 of this appendix. Prior to commencement of the 24-hour simulated-use test, the unit shall remain in an idle state in which controls are active but no water is drawn through the unit for a period of one hour. With no draw occurring, record the reading given by the gas meter and/or the electrical energy meter as appropriate. Begin the 24-hour simulated-use test by withdrawing the volume specified in Tables III.1 through III.4 of section 5.5 of this appendix for the first draw at the flow rate specified. Record the time when this first draw is initiated and designate it as an elapsed time, τ, of 0. At the elapsed times specified in Tables III.1 through III.4 for a particular draw pattern, initiate additional draws, removing the volume of hot water at the prescribed flow rate specified in Tables III.1 through III.4. The maximum allowable deviation from the specified volume of water removed for any single draw taken at a nominal flow rate less than or equal to 1.7 GPM (6.4 L/min) is

±0.1 gallons (±0.4 liters). The maximum allowable deviation from the specified volume of water removed for any single draw taken at a nominal flow rate of 3 GPM (11.4 L/min) is ±0.25 gallons (0.9 liters). The quantity of water drawn during the final draw shall be increased or decreased as necessary such that the total volume of water withdrawn equals the prescribed daily amount for that draw pattern ±1.0 gallon (±3.8 liters). If this adjustment to the volume drawn in the last draw results in no draw taking place, the test is considered invalid.

All draws during the 24-hour simulated-use test shall be made at the flow rates specified in the applicable draw pattern table in section 5.5 of this appendix, within a tolerance of ±0.25 gallons per minute (±0.9 liters per minute). Measurements of the inlet and outlet water temperatures shall be made 15 seconds after the draw is initiated and at every 3-second interval thereafter throughout the duration of the draw. Calculate the mean of the hot water discharge temperature and the cold water inlet temperature for each draw. Record the mass of the withdrawn water or the water meter reading, as appropriate, after each draw. At the end of the first recovery period following the first draw, determine and record the fossil fuel and/or electrical energy consumed, Q_r. Following the final draw and subsequent recovery, allow the water heater to remain in the standby mode until exactly 24 hours have elapsed since the start of the test (*i.e.,* since $\tau = 0$). At 24 hours, record the reading given by the gas meter, oil meter, and/or the electrical energy meter, as appropriate. Determine the fossil fuel and/or electrical energy consumed during the entire 24-hour simulated-use test and designate the quantity as Q.

5.5 *Draw Patterns.*

The draw patterns to be imposed during 24-hour simulated-use tests are provided in Tables III.1 through III.4. Subject each water heater under test to one of these draw patterns based on its first-hour rating or maximum GPM rating, as discussed in section 5.4.1 of this appendix. Each draw pattern specifies the elapsed time in hours and minutes during the 24-hour test when a draw is to commence, the total volume of water in gallons (liters) that is to be removed during each draw, and the flow rate at which each draw is to be taken, in gallons (liters) per minute.

Table III.1—Very-Small-Usage Draw Pattern

Draw No.	Time during test** [hh:mm]	Volume [gallons (L)]	Flow Rate*** [GPM (L/min)]
1*	0:00	2.0 (7.6)	1 (3.8)
2*	1:00	1.0 (3.8)	1 (3.8)
3*	1:05	0.5 (1.9)	1 (3.8)
4*	1:10	0.5 (1.9)	1 (3.8)
5*	1:15	0.5 (1.9)	1 (3.8)
6	8:00	1.0 (3.8)	1 (3.8)
7	8:15	2.0 (7.6)	1 (3.8)
8	9:00	1.5 (5.7)	1 (3.8)
9	9:15	1.0 (3.8)	1 (3.8)
Total Volume Drawn Per Day: 10 gallons (38 L)			

*Denotes draws in first draw cluster.
**If a draw extends to the start of the subsequent draw, then the subsequent draw shall start when the required volume of the previous draw has been delivered.
***Should the water heater have a maximum GPM rating less than 1 GPM (3.8 L/min), then all draws shall be implemented at a flow rate equal to the rated maximum GPM.

Table III.2—Low-Usage Draw Pattern

Draw No.	Time during test [hh:mm]	Volume [gallons (L)]	Flow Rate [GPM (L/min)]
1*	0:00	15.0 (56.8)	1.7 (6.4)
2*	0:30	2.0 (7.6)	1 (3.8)
3*	1:00	1.0 (3.8)	1 (3.8)
4	10:30	6.0 (22.7)	1.7 (6.4)
5	11:30	4.0 (15.1)	1.7 (6.4)
6	12:00	1.0 (3.8)	1 (3.8)
7	12:45	1.0 (3.8)	1 (3.8)
8	12:50	1.0 (3.8)	1 (3.8)
9	16:15	2.0 (7.6)	1 (3.8)
10	16:45	2.0 (7.6)	1.7 (6.4)
11	17:00	3.0 (11.4)	1.7 (6.4)
Total Volume Drawn Per Day: 38 gallons (144 L)			

*Denotes draws in first draw cluster.

Table III.3—Medium-Usage Draw Pattern

Draw No.	Time during test [hh:mm]	Volume [gallons (L)]	Flow Rate [GPM (L/min)]
1*	0:00	15.0 (56.8)	1.7 (6.4)
2*	0:30	2.0 (7.6)	1 (3.8)
3*	1:40	9.0 (34.1)	1.7 (6.4)
4	10:30	9.0 (34.1)	1.7 (6.4)
5	11:30	5.0 (18.9)	1.7 (6.4)
6	12:00	1.0 (3.8)	1 (3.8)
7	12:45	1.0 (3.8)	1 (3.8)
8	12:50	1.0 (3.8)	1 (3.8)
9	16:00	1.0 (3.8)	1 (3.8)
10	16:15	2.0 (7.6)	1 (3.8)
11	16:45	2.0 (7.6)	1.7 (6.4)
12	17:00	7.0 (26.5)	1.7 (6.4)
Total Volume Drawn Per Day: 55 gallons (208 L)			

*Denotes draws in first draw cluster.

Table III.4—High-Usage Draw Pattern

Draw No.	Time during test [hh:mm]	Volume [gallons (L)]	Flow Rate [GPM (L/min)]
1*	0:00	27.0 (102)	3 (11.4)
2*	0:30	2.0 (7.6)	1 (3.8)
3*	0:40	1.0 (3.8)	1 (3.8)
4*	1:40	9.0 (34.1)	1.7 (6.4)
5	10:30	15.0 (56.8)	3 (11.4)
6	11:30	5.0 (18.9)	1.7 (6.4)
7	12:00	1.0 (3.8)	1 (3.8)
8	12:45	1.0 (3.8)	1 (3.8)
9	12:50	1.0 (3.8)	1 (3.8)
10	16:00	2.0 (7.6)	1 (3.8)
11	16:15	2.0 (7.6)	1 (3.8)
12	16:30	2.0 (7.6)	1.7 (6.4)
13	16:45	2.0 (7.6)	1.7 (6.4)
14	17:00	14.0 (53.0)	3 (11.4)
Total Volume Drawn Per Day: 84 gallons (318 L)			

*Denotes draws in first draw cluster.

6. Computations.

6.1 *First-Hour Rating Computation.* For the case in which the final draw is initiated at or prior to one hour from the start of the test, the first-hour rating, F_{hr}, shall be computed using,

$$F_{hr} = \sum_{i=1}^{n} V^*_{del,i}$$

Where:

n = the number of draws that are completed during the first-hour rating test.

$V^*_{del,i}$ = the volume of water removed during the *i*th draw of the first-hour rating test, gal (L) or, if the mass of water removed is being measured,

$$V^*_{del,i} = \frac{M^*_{del,i}}{\rho_{del,i}}$$

Where:

$M^*_{del,i}$ = the mass of water removed during the *i*th draw of the first-hour rating test, lb (kg).

$\rho_{del,i}$ = the density of water removed, evaluated at the average outlet water temperature measured during the *i*th draw of the first-hour rating test, ($\overline{T}^*_{del,i}$), lb/gal (kg/L).

or, if the volume of the water entering the water heater is being measured,

$$V^*_{del,i} = V^*_{in,i} \frac{\rho_{in,i}}{\rho_{del,i}}$$

Where:

$V^*_{in,i}$ = the volume of water entering the water heater during the *i*th draw of the first-hour rating test, gal (L).

$\rho_{in,i}$ = the density of water entering the water heater, evaluated at the average inlet water temperature measured during the *i*th draw of the first-hour rating test, ($\overline{T}^*_{in,i}$), lb/gal (kg/L).

or, if the mass of water entering the water heater is being measured,

$$V^*_{del,i} = \frac{M^*_{in,i}}{\rho_{del,i}}$$

Where:

$M^*_{in,i}$ = the mass of water entering the water heater during the *i*th draw of the first-hour rating test, lb (kg).

For the case in which a draw is not in progress at one hour from the start of the test and a final draw is imposed at the elapsed time of one hour, the first-hour rating shall be calculated using,

$$F_{hr} = V^*_{del,n}\left(\frac{\overline{T}^*_{del,n} - \overline{T}^*_{min,n-1}}{\overline{T}^*_{del,n-1} - \overline{T}^*_{min,n-1}}\right) + \sum_{i=1}^{n-1} V^*_{del,i}$$

where n and $V^*_{del,i}$ are the same quantities as defined above, and

$V^*_{del,n}$ = the volume of water removed during the *n*th (final) draw of the first-hour rating test, gal (L).

$\overline{T}^*_{del,n-1}$ = the average water outlet temperature measured during the *(n−1)*th draw of the first-hour rating test, °F (°C).

$\overline{T}^*_{del,n}$ = the average water outlet temperature measured during the *n*th (final) draw of the first-hour rating test, °F (°C).

$T^*_{min,n-1}$ = the minimum water outlet temperature measured during the *(n−1)*th draw of the first-hour rating test, °F (°C).

6.2 *Maximum GPM (L/min) Rating Computation.* Compute the maximum GPM (L/min) rating, F_{max}, as:

$$F_{max} = \frac{V_{del,10m}\left(\overline{T}_{del} - \overline{T}_{in}\right)}{10(125°F - 58°F)}$$

or,

$$F_{max} = \frac{V_{del,10m}\left(\overline{T}_{del} - \overline{T}_{in}\right)}{10(51.7°C - 14.4°C)}$$

Where:

$V_{del,10m}$ = the volume of water removed during the maximum GPM (L/min) rating test, gal (L).

$\overline{T}_{del}$ = the average delivery temperature, °F (°C).

$\overline{T}_{in}$ = the average inlet temperature, °F (°C).

10 = the number of minutes in the maximum GPM (L/min) rating test, min.

or, if the mass of water removed is measured,

$$V_{del,10m} = \frac{M_{del,10m}}{\rho_{del}}$$

Where:

$M_{del,10m}$ = the mass of water removed during the maximum GPM (L/min) rating test, lb (kg).

ρ_{del} = the density of water removed, evaluated at the average delivery water temperature of the maximum GPM (L/min) rating test ($\overline{T}_{del}$), lb/gal (kg/L).

or, if the volume of water entering the water heater is measured,

$$V_{del,10m} = V_{in,10m}\frac{\rho_{in}}{\rho_{del}}$$

Where:

$V_{in,10m}$ = the volume of water entering the water heater during the maximum GPM (L/min) rating test, gal (L).

ρ_{in} = the density of water entering the water heater, evaluated at the average inlet water temperature of the maximum GPM (L/min) rating test ($\overline{T}_{del}$), lb/gal (kg/L).

or, if the mass of water entering the water heater is measured,

$$V_{del,10m} = \frac{M_{in,10m}}{\rho_{del}}$$

Where:

$M_{in,10m}$ = the mass of water entering the water heater during the maximum GPM (L/min) rating test, lb (kg).

6.3 *Computations for Water Heaters with a Rated Storage Volume Greater Than or Equal to 2 Gallons.*

6.3.1 *Storage Tank Capacity.* The storage tank capacity, V_{st}, is computed as follows:

$$V_{st} = \frac{(W_f - W_t)}{\rho}$$

Where:

V_{st} = the storage capacity of the water heater, gal (L).

W_f = the weight of the storage tank when completely filled with water, lb (kg).

W_t = the (tare) weight of the storage tank when completely empty, lb (kg).

ρ = the density of water used to fill the tank measured at the temperature of the water, lb/gal (kg/L).

6.3.2 *Mass of Water Removed.* Determine the mass of water removed during each draw of the 24-hour simulated-use test ($M_{del,i}$) as:

If the mass of water removed is measured, use the measured value, or, if the volume of water removed is being measured,

$$M_{del,i} = V_{del,i} * \rho_{del,i}$$

Where:

$V_{del,i}$ = volume of water removed during draw *i*th draw of the 24-hour simulated-use test, gal (L).

$\rho_{del,i}$ = density of the water removed, evaluated at the average outlet water temperature measured during the *i*th draw of the 24-hour simulated-use test, ($\overline{T}_{del,i}$), lb/gal (kg/L).

or, if the volume of water entering the water heater is measured,

$$M_{del,i} = V_{in,i} * \rho_{in,i}$$

Where:

$V_{in,i}$ = volume of water entering the water heater during draw *i*th draw of the 24-hour simulated-use test, gal (L).

$\rho_{in,i}$ = density of the water entering the water heater, evaluated at the average inlet water temperature measured during the *i*th draw of the 24-hour simulated-use test, ($\overline{T}_{in,i}$), lb/gal (kg/L).

or, if the mass of water entering the water heater is measured,

$M_{del,i} = M_{in,i}$

Where:

$M_{in,i}$ = mass of water entering the water heater during draw *i*th draw of the 24-hour simulated-use test, lb (kg).

6.3.3 *Recovery Efficiency.* The recovery efficiency for gas, oil, and heat pump water heaters with a rated storage volume greater than or equal to 2 gallons, η_r, is computed as:

$$\eta_r = \frac{V_{st}\,\rho_1\,C_{p1}\left(\overline{T}_{max,1} - \overline{T}_0\right)}{Q_r} + \sum_{i=1}^{N_r} \frac{M_{del,i}\,C_{pi}\left(\overline{T}_{del,i} - \overline{T}_{in,i}\right)}{Q_r}$$

Where:

V_{st} = as defined in section 6.3.1 of this appendix.

ρ_1 = density of stored hot water evaluated at $(\overline{T}_{max,1} + \overline{T}_0)/2$, lb/gal (kg/L).

C_{p1} = specific heat of the stored hot water, evaluated at $(\overline{T}_{max,1} + \overline{T}_0)/2$, Btu/(lb·°F) (kJ/(kg·°C).

$\overline{T}_{max,1}$ = maximum mean tank temperature recorded after the first recovery period as defined in section 5.4.2 of this appendix, °F (°C).

$\overline{T}_0$ = mean tank temperature recorded at the beginning of the 24-hour simulated-use test as determined in section 5.4.2 of this appendix, °F (°C).

Q_r = the total energy used by the water heater during the first recovery period as defined in section 5.4.2 of this appendix, including auxiliary energy such as pilot lights, pumps, fans, etc., Btu (kJ). (Electrical auxiliary energy shall be converted to thermal energy using the following conversion: 1 kWh = 3412 Btu).

N_r = number of draws from the start of the 24-hour simulated-use test to the end to the first recovery period as described in section 5.4.2.

$M_{del,i}$ = mass of water removed as calculated in section 6.3.2 of this appendix during draw *i*th draw of the first recovery period as described in section 5.4.2, lb (kg).

C_{pi} = specific heat of the withdrawn water during the *i*th draw of the first recovery period as described in section 5.4.2, evaluated at $(\overline{T}_{del,i} + \overline{T}_{in,i})/2$, Btu/(lb· °F) (kJ/(kg· °C)).

$\overline{T}_{del,i}$ = average water outlet temperature measured during the *i*th draw of the first recovery period as described in section 5.4.2, °F (°C).

$\overline{T}_{in,i}$ = average water inlet temperature measured during the *i*th draw of the first recovery period as described in section 5.4.2, °F (°C).

The recovery efficiency for electric water heaters with immersed heating elements, not including heat pump water heaters with immersed heating elements, is assumed to be 98 percent.

6.3.4 *Hourly Standby Losses.* The energy consumed as part of the standby loss test of the 24-hour simulated-use test, Q_{stby}, is computed as:

$$Q_{stby} = Q_{su,f} - Q_{su,0}$$

Where:

$Q_{su,0}$ = cumulative energy consumption, including all fossil fuel and electrical energy use, of the water heater from the start of the 24-hour simulated-use test to the start of the standby period as determined in section 5.4.2 of this appendix, Btu (kJ).

$Q_{su,f}$ = cumulative energy consumption, including all fossil fuel and electrical energy use, of the water heater from the start of the 24-hour simulated-use test to the end of the standby period as determined in section 5.4.2 of this appendix, Btu (kJ).

The hourly standby energy losses are computed as:

$$Q_{hr} = \frac{Q_{stby} - \frac{V_{st}\,\rho\,C_p\left(\overline{T}_{su,f} - \overline{T}_{su.0}\right)}{\eta_r}}{\tau_{stby,1}}$$

Where:

Q_{hr} = the hourly standby energy losses of the water heater, Btu/h (kJ/h).

V_{st} = as defined in section 6.3.1 of this appendix.

ρ = density of the stored hot water, evaluated at $(\overline{T}_{su,f} + \overline{T}_{su,0})/2$, lb/gal (kg/L).

C_p = specific heat of the stored water, evaluated at $(\overline{T}_{su,f} + \overline{T}_{su,0})/2$, Btu/(lb·F), (kJ/(kg·K)).

$\overline{T}_{su,f}$ = the mean tank temperature measured at the end of the standby period as determined in section 5.4.2 of this appendix, °F (°C).

$\overline{T}_{su,0}$ = the maximum mean tank temperature measured at the beginning of the standby period as determined in section 5.4.2 of this appendix, °F (°C).

η_r = as defined in section 6.3.3 of this appendix.

$\tau_{stby,1}$ = elapsed time between the start and end of the standby period as determined in section 5.4.2 of this appendix, h.

The standby heat loss coefficient for the tank is computed as:

$$UA = \frac{Q_{hr}}{\overline{T}_{t,stby,1} - \overline{T}_{a,stby,1}}$$

Where:

UA = standby heat loss coefficient of the storage tank, Btu/(h· °F), (kJ/(h· °C).

$\overline{T}_{t,stby,1}$ = overall average mean tank temperature between the start and end of the standby period as determined in section 5.4.2 of this appendix, °F (°C).

$\overline{T}_{a,stby,1}$ = overall average ambient temperature between the start and end of the standby period as determined in section 5.4.2 of this appendix, °F (°C).

6.3.5 *Daily Water Heating Energy Consumption.* The total energy used by the water heater during the 24-hour simulated-use test (Q) is as measured in section 5.4.2 of this appendix, or,

$Q = Q_f + Q_e$ = total energy used by the water heater during the 24-hour simulated-use test, including auxiliary energy such as pilot lights, pumps, fans, etc., Btu (kJ).

Q_f = total fossil fuel energy used by the water heater during the 24-hour simulated-use test, Btu (kJ).

Q_e = total electrical energy used during the 24-hour simulated-use test, Btu (kJ). (Electrical energy shall be converted to thermal energy using the following conversion: 1kWh = 3412 Btu.)

The daily water heating energy consumption, Q_d, is computed as:

$$Q_d = Q - \frac{V_{st}\,\rho\,C_p\left(\overline{T}_{24} - \overline{T}_0\right)}{\eta_r}$$

Where:

V_{st} = as defined in section 6.3.1 of this appendix.

ρ = density of the stored hot water, evaluated at $(\overline{T}_{24} + \overline{T}_0)/2$, lb/gal (kg/L).

C_p = specific heat of the stored water, evaluated at $(\overline{T}_{24} + \overline{T}_0)/2$, Btu/(lb·F), (kJ/(kg·K)).

$\overline{T}_{24}$ = mean tank temperature at the end of the 24-hour simulated-use test as determined in section 5.4.2 of this appendix, °F (°C).

$\overline{T}_0$ = mean tank temperature recorded at the beginning of the 24-hour simulated-use test as determined in section 5.4.2 of this appendix, °F (°C).

η_r = as defined in section 6.3.3 of this appendix.

6.3.6 *Adjusted Daily Water Heating Energy Consumption.* The adjusted daily water heating energy consumption, Q_{da}, takes into account that the ambient temperature may differ from the nominal value of 67.5 °F (19.7 °C) due to the allowable variation in surrounding ambient temperature of 65 °F (18.3 °C) to 70 °C (21.1 °C). The adjusted daily water heating energy consumption is computed as:

$$Q_{da} = Q_d - \left(67.5°F - \overline{T}_{a,stby,2}\right) UA\, \tau_{stby,2}$$

or,

$$Q_{da} = Q_d - \left(19.7°C - \overline{T}_{a,stby,2}\right) UA\, \tau_{stby,2}$$

Where:

Q_{da} = the adjusted daily water heating energy consumption, Btu (kJ).

Q_d = as defined in section 6.3.4 of this appendix.

$\overline{T}_{a,stby,2}$ = the average ambient temperature during the total standby portion, $\tau_{stby,2}$, of the 24-hour simulated-use test, °F (°C).

UA = as defined in section 6.3.4 of this appendix.

$\tau_{stby,2}$ = the number of hours during the 24-hour simulated-use test when water is not being withdrawn from the water heater.

A modification is also needed to take into account that the temperature difference between the outlet water temperature and supply water temperature may not be equivalent to the nominal value of 67 °F (125 °F-58 °F) or 37.3 °C (51.7 °C-14.4 °C). The following equations adjust the experimental data to a nominal 67 °F (37.3 °C) temperature rise.

The energy used to heat water, Btu/day (kJ/day), may be computed as:

$$Q_{HW} = \sum_{i=1}^{N} \frac{M_{del,i}\, C_{pi}\left(\overline{T}_{del,i} - \overline{T}_{in,i}\right)}{\eta_r}$$

Where:

N = total number of draws in the 24-hour simulated-use test.

$M_{del,i}$ = the mass of water removed during the *i*th draw (i = 1 to N) as calculated in section 6.3.2 of this appendix, lb (kg).

C_{pi} = the specific heat of the water withdrawn during the *i*th draw of the 24-hour simulated-use test, evaluated at $(\overline{T}_{del,i} + \overline{T}_{in,i})/2$, Btu/(lb· °F) (kJ/(kg·°C)).

$\overline{T}_{del,i}$ = the average water outlet temperature measured during the *i*th draw (i = 1 to N), °F (°C).

$\bar{T}_{in,i}$ = the average water inlet temperature measured during the *i*th draw (i = 1 to N), °F (°C).

η_r = as defined in section 6.3.3 of this appendix.

The energy required to heat the same quantity of water over a 67 °F (37.3 °C) temperature rise, Btu/day (kJ/day), is:

$$Q_{HW,67°F} = \sum_{i=1}^{N} \frac{M_{del,i}\, C_{pi}(125°F - 58°F)}{\eta_r}$$

or,

$$Q_{HW,37.3°C} = \sum_{i=1}^{N} \frac{M_{del,i}\, C_{pi}(51.7°C - 14.4°C)}{\eta_r}$$

The difference between these two values is:

$$Q_{HWD} = Q_{HW,67°F} - Q_{HW}$$

or,

$$Q_{HWD} = Q_{HW,37.3°C} - Q_{HW}$$

This difference (Q_{HWD}) must be added to the adjusted daily water heating energy consumption value. Thus, the daily energy consumption value, which takes into account that the ambient temperature may not be 67.5 °F (19.7 °C) and that the temperature rise across the storage tank may not be 67 °F (37.3 °C) is:

$$Q_{dm} = Q_{da} + Q_{HWD}$$

6.3.7 *Uniform Energy Factor.* The uniform energy factor, UEF, is computed as:

$$UEF = \sum_{i=1}^{N} \frac{M_{del,i}\, C_{pi}\, (125°F - 58°F)}{Q_{dm}}$$

or,

$$UEF = \sum_{i=1}^{N} \frac{M_{del,i}\, C_{pi}\, (51.7°C - 14.4°C)}{Q_{dm}}$$

Where:

N = total number of draws in the 24-hour simulated-use test.

Q_{dm} = the modified daily water heating energy consumption as computed in accordance with section 6.3.6 of this appendix, Btu (kJ).

$M_{del,i}$ = the mass of water removed during the *i*th draw (i = 1 to N) as calculated in section 6.3.2 of this appendix, lb (kg).

C_{pi} = the specific heat of the water withdrawn during the *i*th draw of the 24-hour simulated-use test, evaluated at (125 °F + 58 °F)/2 = 91.5 °F ((51.7 °C + 14.4 °C)/2 = 33 °C), Btu/(lb·°F) (kJ/(kg·°C)).

6.3.8 *Annual Energy Consumption.* The annual energy consumption for water heaters with rated storage volumes greater than or equal to 2 gallons is computed as:

$$E_{annual} = 365 * \frac{(V)(\rho)(C_p)(67)}{UEF}$$

Where:

UEF = the uniform energy factor as computed in accordance with section 6.3.7 of this appendix.

365 = the number of days in a year.

V = the volume of hot water drawn during the applicable draw pattern, gallons

= 10 for the very-small-usage draw pattern.

= 38 for the low-usage draw pattern.

= 55 for the medium-usage draw pattern.

= 84 for high-usage draw pattern.

ρ = 8.24 lb/gallon, the density of water at 125 °F.

C_p = 1.00 Btu/(lb °F), the specific heat of water at 91.5 °F.

67 = the nominal temperature difference between inlet and outlet water.

6.3.9 *Annual Electrical Energy Consumption.* The annual electrical energy consumption in kilowatt-hours for water heaters with rated storage volumes greater than or equal to 2 gallons, $E_{annual,e}$, is computed as:

$$E_{annual,e} = \frac{E_{annual}}{3412} * \left(\frac{Q_e}{Q}\right)$$

Where:

E_{annual} = the annual energy consumption as determined in accordance with section 6.3.8 of this appendix, Btu (kJ).

Q_e = the daily electrical energy consumption as defined in section 6.3.5 of this appendix, Btu (kJ).

Q = total energy used by the water heater during the 24-hour simulated-use test in accordance with section 6.3.5 of this appendix, Btu (kJ).

3412 = conversion factor from Btu to kWh.

6.3.10 *Annual Fossil Fuel Energy Consumption.* The annual fossil fuel energy consumption for water heaters with rated storage volumes greater than or equal to 2 gallons, $E_{annual,f}$, is computed as:

$$E_{annual,f} = E_{annual} - (E_{annual,e} * 3412)$$

Where:

E_{annual} = the annual energy consumption as determined in accordance with section 6.3.8 of this appendix, Btu (kJ).

$E_{annual,e}$ = the annual electrical energy consumption as determined in accordance with section 6.3.9 of this appendix, kWh.

3412 = conversion factor from kWh to Btu.

6.4 *Computations for Water Heaters With a Rated Storage Volume Less Than 2 Gallons.*

6.4.1 *Mass of Water Removed*

Calculate the mass of water removed using the calculations in section 6.3.2 of this appendix.

6.4.2 *Recovery Efficiency.* The recovery efficiency, η_r, is computed as:

$$\eta_r = \frac{M_1\, C_{p1}\left(\overline{T}_{del,1} - \overline{T}_{in,1}\right)}{Q_r}$$

Where:

M_1 = mass of water removed during the first draw of the 24-hour simulated-use test, lb (kg).

C_{p1} = specific heat of the withdrawn water during the first draw of the 24-hour simulated-use test, evaluated at $(\overline{T}_{del,1} + \overline{T}_{in,1})/2$, Btu/(lb ·°F) (kJ/(kg ·°C)).

$\overline{T}_{del,1}$ = average water outlet temperature measured during the first draw of the 24-hour simulated-use test, °F (°C).

$\overline{T}_{in,1}$ = average water inlet temperature measured during the first draw of the 24-hour simulated-use test, °F (°C).

Q_r = the total energy used by the water heater during the first recovery period as defined in section 5.4.3 of this appendix, including auxiliary energy such as pilot lights, pumps, fans, etc., Btu (kJ). (Electrical auxiliary energy shall be converted to thermal energy using the following conversion: 1 kWh = 3412 Btu.)

6.4.3 *Daily Water Heating Energy Consumption.* The daily water heating energy consumption, Q_d, is computed as:

$$Q_d = Q$$

Where:

$Q = Q_f + Q_e$ = the energy used by the water heater during the 24-hour simulated-use test.

Q_f = total fossil fuel energy used by the water heater during the 24-hour simulated-use test, Btu (kJ).

Q_e = total electrical energy used during the 24-hour simulated-use test, Btu (kJ). (Electrical auxiliary energy shall be converted to thermal energy using the following conversion: 1 kWh = 3412 Btu.)

A modification is needed to take into account that the temperature difference between the outlet water temperature and supply water temperature may not be equivalent to the nominal value of 67 °F (125 °F-58 °F) or 37.3 °C (51.7 °C-14.4 °C). The following equations adjust the experimental data to a nominal 67 °F (37.3 °C) temperature rise.

The energy used to heat water may be computed as:

$$Q_{HW} = \sum_{i=1}^{N} \frac{M_{del,i}\, C_{pi}\left(\overline{T}_{del,i} - \overline{T}_{in,i}\right)}{\eta_r}$$

Where:

N = total number of draws in the 24-hour simulated-use test.

$M_{del,i}$ = the mass of water removed during the *i*th draw (i = 1 to N) as calculated in section 6.4.1 of this appendix, lb (kg).

C_{pi} = the specific heat of the water withdrawn during the *i*th draw of the 24-hour simulated-use test, evaluated at $(\overline{T}_{del,i} + \overline{T}_{in,i})/2$, Btu/(lb·°F) (kJ/(kg·°C)).

$\overline{T}_{del,i}$ = the average water outlet temperature measured during the *i*th draw (i = 1 to N), °F (°C).

$\overline{T}_{in,i}$ = the average water inlet temperature measured during the *i*th draw (i = 1 to N), °F (°C).

η_r = as defined in section 6.4.2 of this appendix.

The energy required to heat the same quantity of water over a 67 °F (37.3 °C) temperature rise is:

$$Q_{HW,67°F} = \sum_{i=1}^{N} \frac{M_{del,i}\, C_{pi}(125°F - 58°F)}{\eta_r}$$

or,

$$Q_{HW,37.3°C} = \sum_{i=1}^{N} \frac{M_{del,i}\, C_{pi}(51.7°C - 14.4°C)}{\eta_r}$$

Where:

N = total number of draws in the 24-hour simulated-use test.

$M_{del,i}$ = the mass of water removed during the *i*th draw (i = 1 to N) as calculated in section 6.4.1 of this appendix, lb (kg).

C_{pi} = the specific heat of the water withdrawn during the *i*th draw of the 24-hour simulated-use test, evaluated at $(\overline{T}_{del,i} + \overline{T}_{in,i})/2$, Btu/(lb·°F) (kJ/(kg·°C)).

η_r = as defined in section 6.4.2 of this appendix.

The difference between these two values is:

$$Q_{HWD} = Q_{HW,67°F} - Q_{HW}$$

or,

$$Q_{HWD} = Q_{HW,37.3°C} - Q_{HW}$$

This difference (Q_{HWD}) must be added to the daily water heating energy consumption value. Thus, the daily energy consumption value, which takes into account that the temperature rise across the water heater may not be 67 °F (37.3 °C), is:

$$Q_{dm} = Q_{da} + Q_{HWD}$$

6.4.4 *Uniform Energy Factor.* The uniform energy factor, UEF, is computed as:

$$UEF = \sum_{i=1}^{N} \frac{M_{del,i}\, C_{pi}\, (125°F - 58°F)}{Q_{dm}}$$

or,

$$UEF = \sum_{i=1}^{N} \frac{M_{del,i}\, C_{pi}\, (51.7°C - 14.4°C)}{Q_{dm}}$$

Where:

N = total number of draws in the 24-hour simulated-use test.

Q_{dm} = the modified daily water heating energy consumption as computed in accordance with section 6.4.3 of this appendix, Btu (kJ).

$M_{del,i}$ = the mass of water removed during the *i*th draw (i = 1 to N) as calculated in section 6.4.1 of this appendix, lb (kg).

C_{pi} = the specific heat of the water withdrawn during the *i*th draw of the 24-hour simulated-use test, evaluated at (125 °F + 58 °F)/2 = 91.5 °F ((51.7 °C + 14.4 °C)/2 = 33.1 °C), Btu/(lb·°F) (kJ/(kg·°C)).

6.4.5 *Annual Energy Consumption.* The annual energy consumption for water heaters with rated storage volumes less than 2 gallons, E_{annual}, is computed as:

$$E_{annual} = 365 * \frac{(V)(\rho)(C_p)(67)}{UEF}$$

Where:

UEF = the uniform energy factor as computed in accordance with section 6.4.4 of this appendix.

365 = the number of days in a year.

V = the volume of hot water drawn during the applicable draw pattern, gallons

= 10 for the very-small-usage draw pattern.

= 38 for the low-usage draw pattern.

= 55 for the medium-usage draw pattern.

= 84 for high-usage draw pattern.

ρ = 8.24 lb/gallon, the density of water at 125 °F.

C_p = 1.00 Btu/(lb °F), the specific heat of water at 91.5 °F.

67 = the nominal temperature difference between inlet and outlet water.

6.4.6 *Annual Electrical Energy Consumption.* The annual electrical energy consumption in kilowatt-hours for water heaters with rated storage volumes less than 2 gallons, $E_{annual,e}$, is computed as:

$$E_{annual,e} = \frac{E_{annual}}{3412} * \left(\frac{Q_e}{Q}\right)$$

Where:

Q_e = the daily electrical energy consumption as defined in section 6.4.3 of this appendix, Btu (kJ).

E_{annual} = the annual energy consumption as determined in accordance with section 6.4.5 of this appendix, Btu (kJ).

Q = total energy used by the water heater during the 24-hour simulated-use test in accordance with section 6.4.3 of this appendix, Btu (kJ).

Q_{dm} = the modified daily water heating energy consumption as computed in accordance with section 6.4.3 of this appendix, Btu (kJ).

3412 = conversion factor from Btu to kWh.

6.4.7 *Annual Fossil Fuel Energy Consumption.* The annual fossil fuel energy consumption for water heaters with rated storage volumes less than 2 gallons, $E_{annual,f}$, is computed as:

$$E_{annual,f} = E_{annual} - (E_{annual,e} * 3412)$$

Where:

E_{annual} = the annual energy consumption as defined in section 6.4.5 of this appendix, Btu (kJ).

$E_{annual,e}$ = the annual electrical energy consumption as defined in section 6.4.6 of this appendix, kWh.

3412 = conversion factor from kWh to Btu.

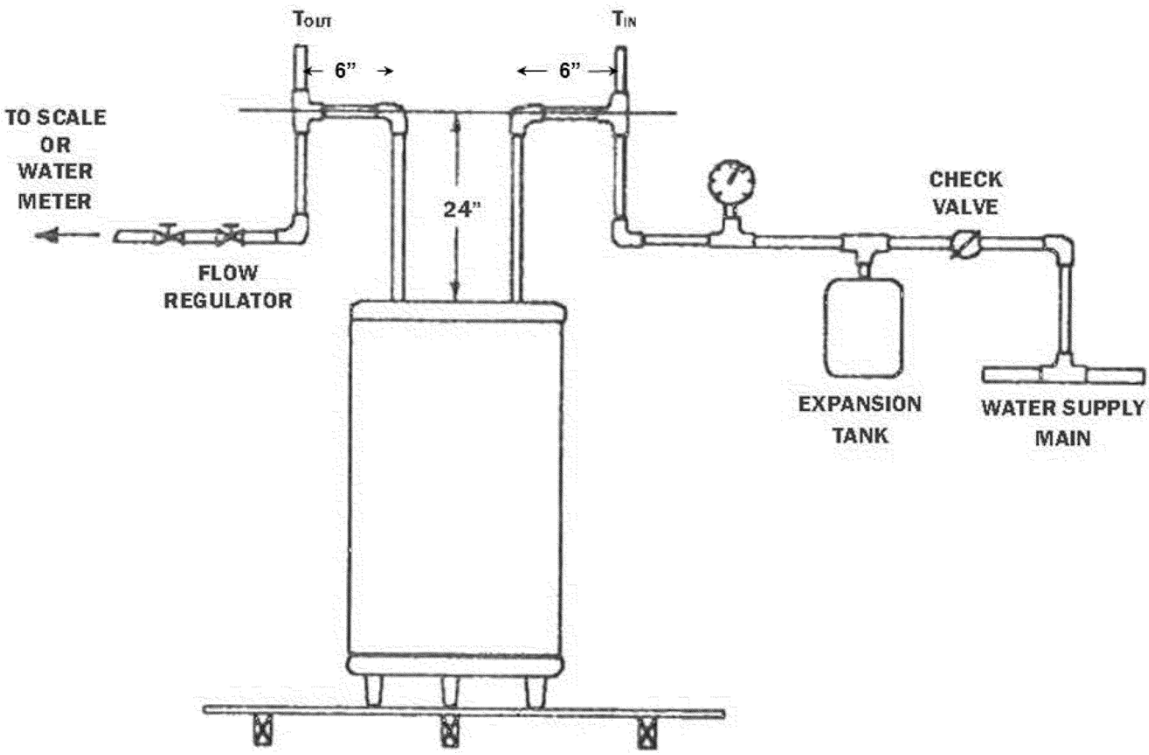

Figure 1.

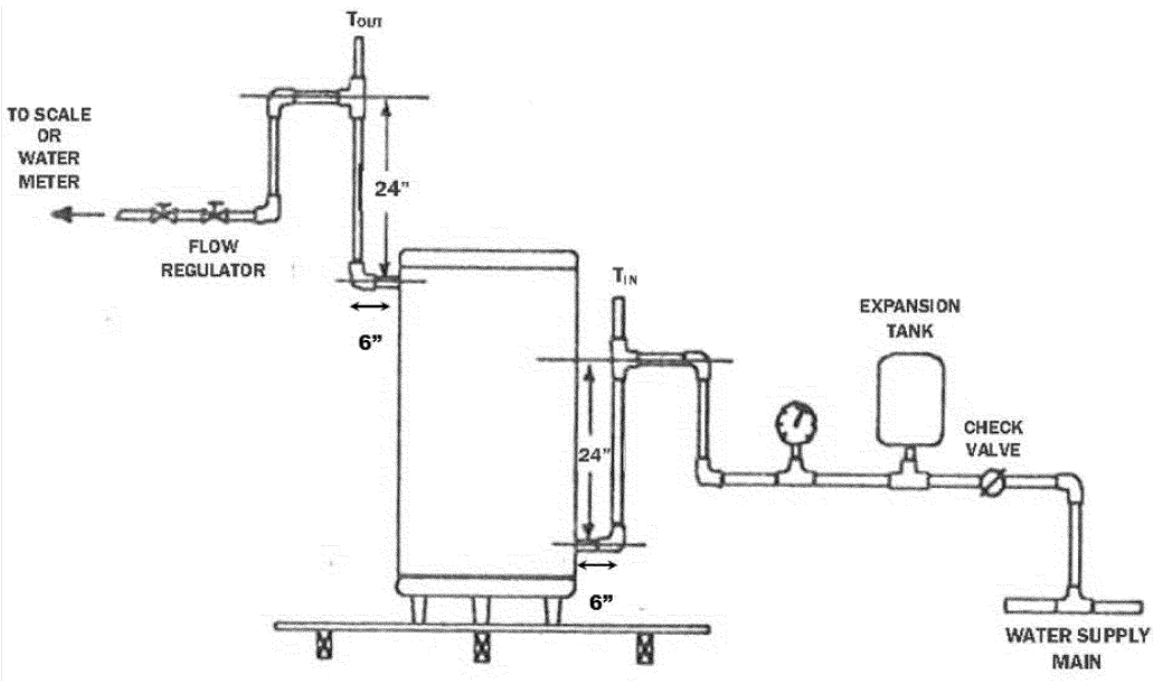

Figure 2.

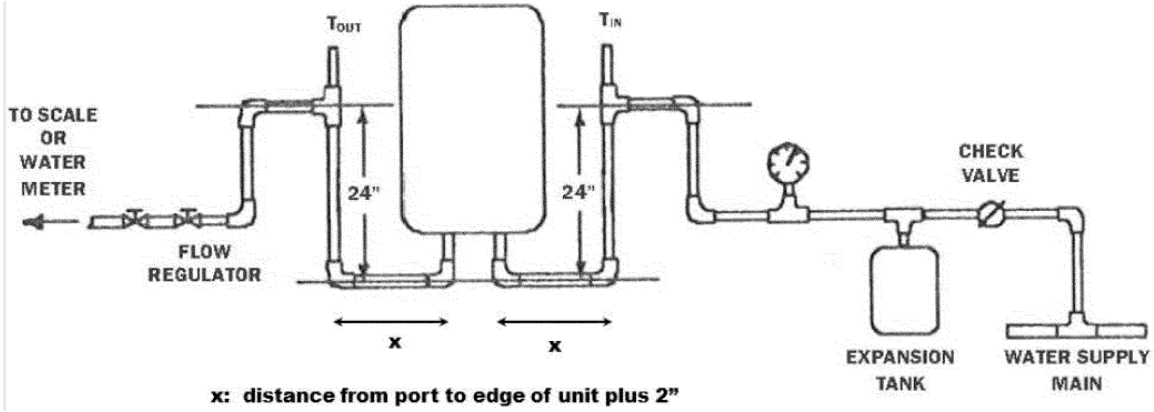

Figure 3.

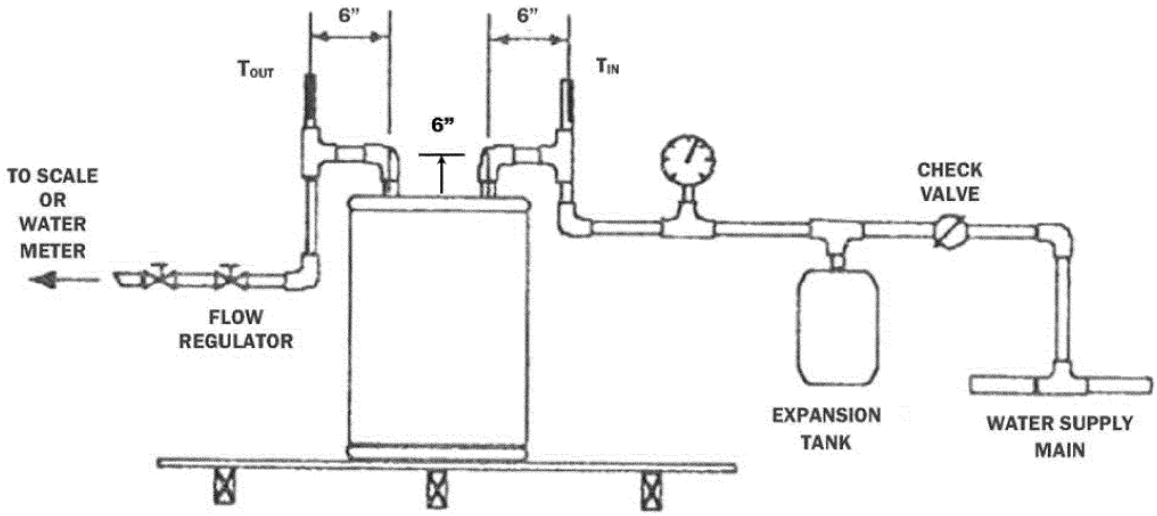

Figure 4.

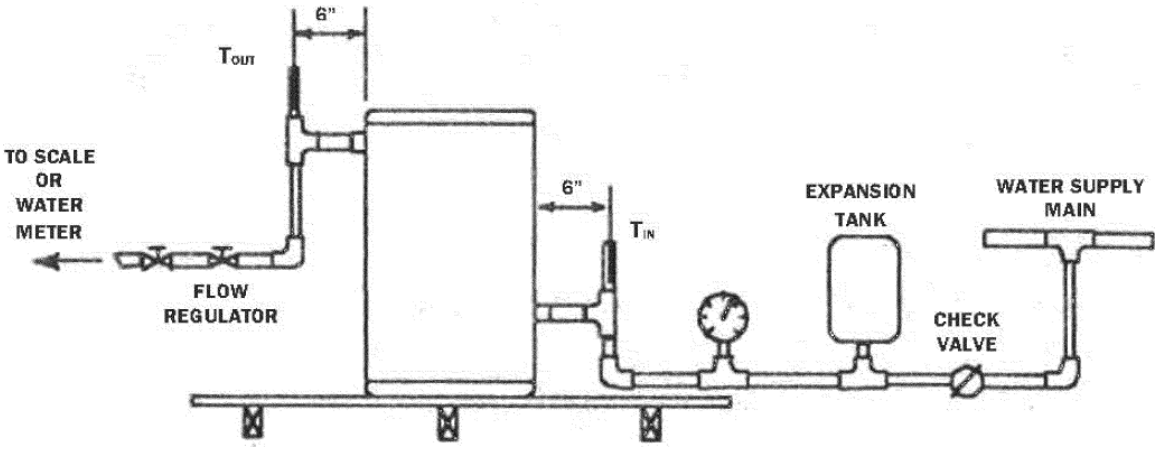

Figure 5.

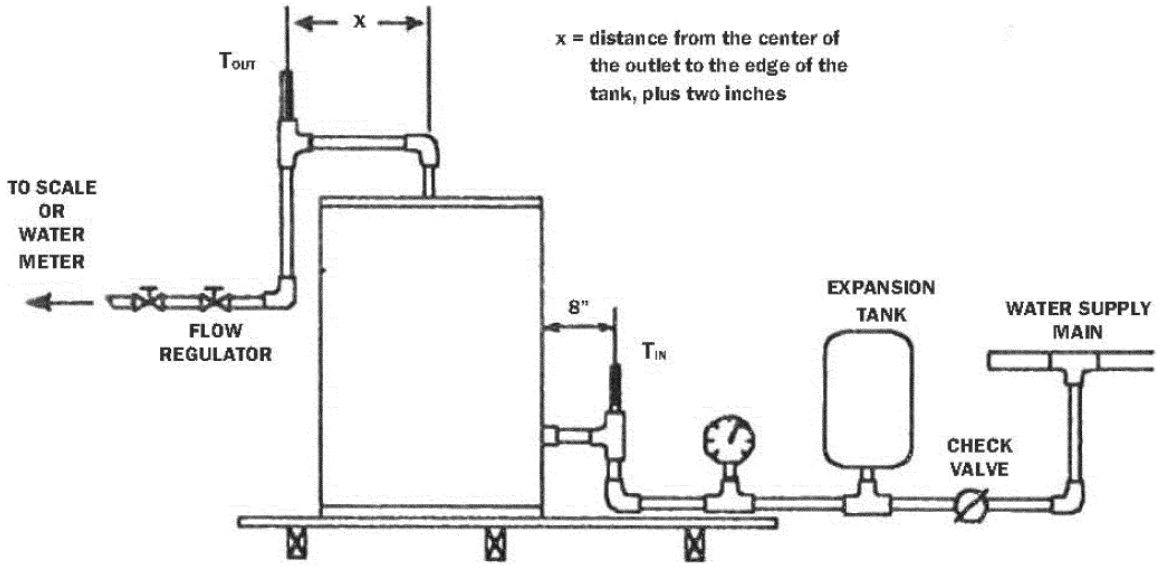

Figure 6.

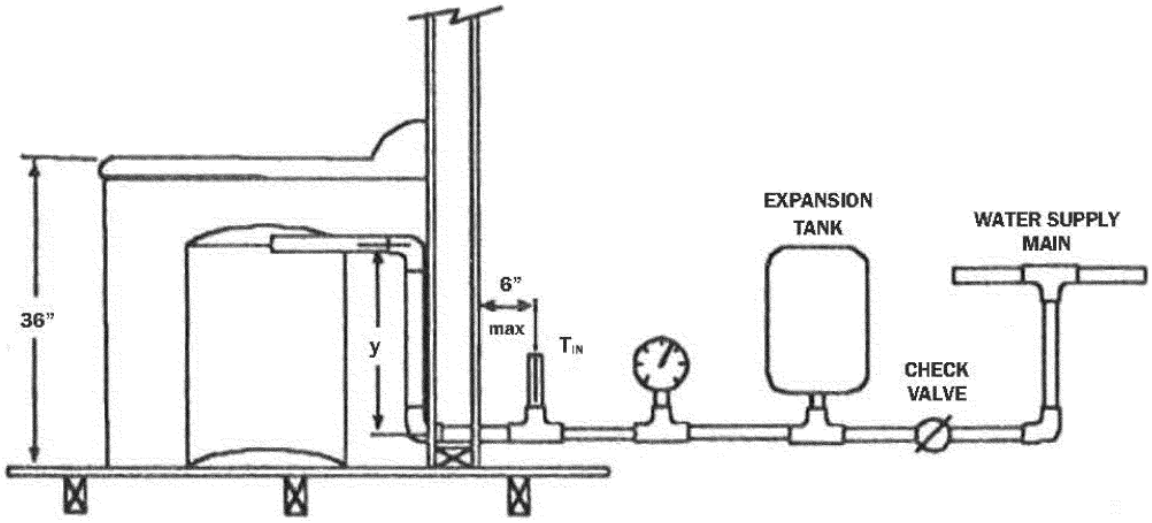

Figure 7a.

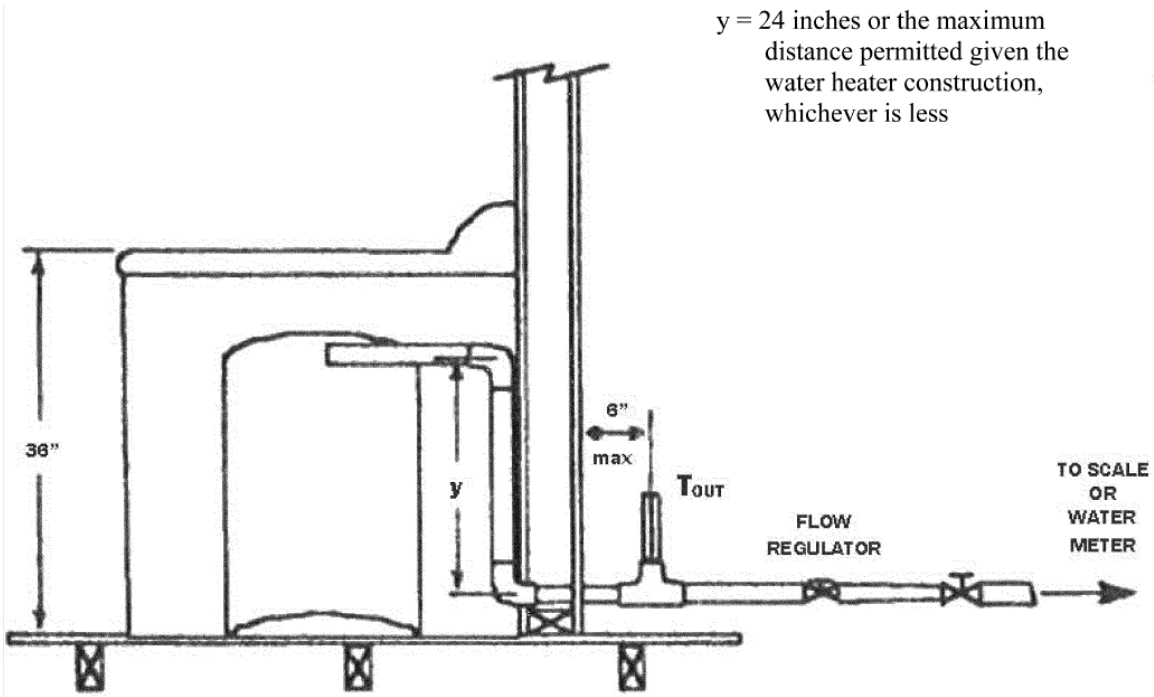

Figure 7b.

PART 431 -- ENERGY EFFICIENCY PROGRAM FOR CERTAIN COMMERCIAL AND INDUSTRIAL EQUIPMENT

8. The authority citation for part 431 continues to read as follows:

Authority: 42 U.S.C. 6291–6317; 28 U.S.C. 2461 note.

9. Amend §431.102 by adding in alphabetical order the definition of "*Commercial heat pump water heater (CHPWH)*" to read as follows:

§431.102 Definitions concerning commercial water heaters, hot water supply boilers, unfired hot water storage tanks, and commercial heat pump water heaters.

* * * * *

Commercial heat pump water heater (CHPWH) means a water heater (including all ancillary equipment such as fans, blowers, pumps, storage tanks, piping, and controls, as applicable) that uses a refrigeration cycle, such as vapor compression, to transfer heat from a low-temperature source to a higher-temperature sink for the purpose of heating potable water, and operates with a current rating greater than 24 amperes or a voltage greater than 250 volts. Such equipment includes, but is not limited to, air-source heat pump water heaters, water-source heat pump water heaters, and direct geo-exchange heat pump water heaters.

* * * * *

[FR Doc. 2021-27004 Filed: 1/10/2022 8:45 am; Publication Date: 1/11/2022]