This document is scheduled to be published in the
Federal Register on 05/09/2016 and available online at
http://federalregister.gov/a/2016-09539, and on **FDsys.gov**

[6450-01-P]

DEPARTMENT OF ENERGY

10 CFR Parts 429, 430, and 431

[Docket No. EERE-2014-BT-TP-0008]

RIN 1904-AD18

Energy Conservation Program for Certain Commercial and Industrial Equipment: Test Procedure for Commercial Water Heating Equipment

AGENCY: Office of Energy Efficiency and Renewable Energy, Department of Energy.

ACTION: Notice of proposed rulemaking (NOPR) and announcement of public meeting.

SUMMARY: The U.S. Department of Energy (DOE) proposes to revise its test procedures for commercial water heaters, unfired hot water storage tanks, and hot water supply boilers (henceforth, "commercial water heating (CWH) equipment") established under the Energy Policy and Conservation Act of 1975 (EPCA), as amended. In this NOPR, DOE proposes several changes, including: updating references of industry test standards to incorporate by reference the most recent versions of the industry standards; proposing modifications to the existing test methods for certain classes of CWH equipment; developing new test procedures for determining the efficiency of unfired hot water storage tanks, commercial heat pump water heaters, and flow-activated instantaneous water heaters; proposing clarifications on test set-up and settings for various classes of CWH equipment; revising the certification requirements for CWH equipment; and proposing associated implementing regulations including definitions. DOE announces a public meeting to receive comment on these proposed test procedure

amendments, and it also welcomes written comments and data from the public on all aspects of this proposal.

DATES: Meeting: DOE will hold a public meeting on June 6, 2016, from 9:30 a.m. to 12:00 p.m., in Washington, DC. The meeting will also be broadcast as a webinar. See section V, "Public Participation," for webinar registration information, participant instructions, and information about the capabilities available to webinar participants.

Comments: DOE will accept comments, data, and information regarding this NOPR before and after the public meeting, but no later than [**INSERT DATE 60 DAYS AFTER DATE OF PUBLICATION IN THE FEDERAL REGISTER**]. See section V, "Public Participation," for details.

ADDRESSES: The public meeting will be held at the U.S. Department of Energy, Forrestal Building, Room 8E-089, 1000 Independence Avenue, SW., Washington, DC 20585. To attend, please notify Ms. Brenda Edwards at (202) 586–2945. Further attendance instructions can be found in section V, "Public Participation."

Instructions: All comments submitted must identify the NOPR for Test Procedures for Commercial Water Heating Equipment, and provide docket number EERE-2014-BT-TP-0008 and/or regulatory identification number (RIN) 1904-AD18. Interested persons are encouraged to submit comments using the Federal eRulemaking Portal at www.regulations.gov. Follow the instructions for submitting comments. Alternatively, interested persons may submit comments by any of the following methods:

- E-mail: CommWaterHeatingEquip2014TP0008@ee.doe.gov. Include the docket number and/or RIN in the subject line of the message. Submit electronic comments in WordPerfect, Microsoft Word, PDF, or ASCII file format, and avoid the use of special characters or any form of encryption.
- Postal Mail: Ms. Brenda Edwards, U.S. Department of Energy, Building Technologies Office, Mailstop EE-5B, 1000 Independence Avenue, SW., Washington, DC, 20585-0121. If possible, please submit all items on a compact disc (CD), in which case it is not necessary to include printed copies.
- Hand Delivery/Courier: Ms. Brenda Edwards, U.S. Department of Energy, Building Technologies Office, 950 L'Enfant Plaza, SW., Suite 600, Washington, DC, 20024. Telephone: (202) 586-2945. If possible, please submit all items on a CD, in which case it is not necessary to include printed copies.

DOE will not accept telefacsimilies (faxes). For detailed instructions on submitting comments and additional information on the rulemaking process, see section V of this document (Public Participation).

Docket: The docket is available for review at www.regulations.gov, including Federal Register notices, public meeting attendee lists and transcripts, comments, and other supporting documents/materials. All documents in the docket are listed in the www.regulations.gov index. However, not all documents listed in the index may be publicly available, such as information that is exempt from public disclosure.

A link to the docket webpage can be found at: http://www.regulations.gov/#!docketDetail;D=EERE-2014-BT-TP-0008. This webpage contains a link to the docket for this rulemaking on the www.regulations.gov site. The www.regulations.gov webpage contains simple instructions on how to access all documents, including public comments, in the docket. See section V, "Public Participation," for further information on how to submit comments through www.regulations.gov.

For further information on how to submit a comment, review other public comments and the docket, or participate in the public meeting, contact Ms. Brenda Edwards at (202) 586-2945 or by email: Brenda.Edwards@ee.doe.gov.

FOR FURTHER INFORMATION CONTACT: Ms. Ashley Armstrong, U.S. Department of Energy, Office of Energy Efficiency and Renewable Energy, Building Technologies Office, EE-5B, 1000 Independence Avenue, SW., Washington, DC, 20585-0121. Telephone: (202) 586-6590. E-mail: Ashley.Armstrong@ee.doe.gov.

Mr. Eric Stas, U.S. Department of Energy, Office of the General Counsel, GC-33, 1000 Independence Avenue, SW., Washington, DC, 20585-0121. Telephone: (202) 586-9507. E-mail: Eric.Stas@hq.doe.gov.

For more information on how to submit a comment, or review other public comments and the docket, contact Ms. Brenda Edwards, U.S. Department of Energy, Office of Energy Efficiency and Renewable Energy, Building Technologies Office, Mailstop EE-5B, 1000

Independence Avenue, SW, Washington, DC 20585-0121. Telephone: (202) 586-2945. E-mail: Brenda.Edwards@ee.doe.gov.

SUPPLEMENTARY INFORMATION: DOE intends to incorporate by reference the following industry standards into part 431:

(1) Gas Appliance Manufacturers Association (GAMA) Standard IWH-TS-1, March 2003 edition, "Method to Determine Performance of Indirect-Fired Water Heaters," sections 4, 5, 6.0, and 6.1;

(2) American National Standards Institute (ANSI) Standard Z21.10.3-2015/ Canadian Standards Association (CSA) Standard 4.3-2015, "Gas-fired Water Heaters, Volume III, Storage Water Heaters with Input Ratings Above 75,000 Btu Per Hour, Circulating and Instantaneous," annex E.1;

(3) ANSI/American Society of Heating Refrigeration and Air-Conditioning Engineers (ASHRAE) Standard 118.1-2012, "Method of Testing for Rating Commercial Gas, Electric, and Oil Service Water-Heating Equipment";

(4) ASTM International (ASTM) C177-13, "Standard Test Method for Steady-State Heat Flux Measurements and Thermal Transmission Properties by Means of the Guarded-Hot-Plate Apparatus";

(5) ASTM C518-10, "Standard Test Method for Steady-State Thermal Transmission Properties by Means of the Heat Flow Meter Apparatus;" and

(6) ASTM D2156-09, "Standard Test Method for Smoke Density in Flue Gases from Burning Distillate Fuels."

Copies of GAMA IWH-TS-1, March 2003 edition, can be obtained from the Air-conditioning, Heating, and Refrigeration Institute (AHRI), 2111 Wilson Blvd, Suite 500, Arlington, VA 22201, (703) 524-8800, or by going to http://www.ahrinet.org/App_Content/ahri/files/standards%20pdfs/Indirect-Fired%20Water%20Heater%20Testing%20Standard03.pdf.

Copies of ANSI Z21.10.3-2015/CSA 4.3-2015 and ANSI/ASHRAE 118.1-2012 can be obtained from the American National Standards Institute, 25 W. 43rd Street, 4th Floor, New York, NY 10036, (212) 642-4800, or by going to http://webstore.ansi.org/.

Copies of ASTM C177-13, ASTM C518-10, and ASTM D2156-09 can be obtained from ASTM International, 100 Barr Harbor Drive, P.O. Box C700, West Conshohocken, PA 19428-2959, (610) 832-9585, or by going to http://www.astm.org/Standard/index.html.

See IV.M. for a further discussion of these standards.

Table of Contents

I. Authority and Background
II. Synopsis of the Notice of Proposed Rulemaking
III. Discussion
A. Updated Industry Test Methods
1. ANSI Z21.10.3 Testing Standard
2. ASTM Standard Test Method D2156
3. ASTM Test Standards C177-13 and C518-10
B. Test Method Repeatability and Ambient Test Conditions
C. Test Method for Unfired Hot Water Storage Tanks
D. Procedure for Setting the Tank Thermostat for Storage and Storage-Type Instantaneous Water Heaters
E. Clarifications to the Thermal Efficiency and Standby Loss Test Procedures
F. Definitions for Certain Consumer Water Heaters and Commercial Water Heating Equipment
1. Consumer Water Heaters
2. Commercial Water Heating Equipment
3. Residential-Duty Commercial Water Heaters
4. Storage-type Instantaneous Water Heaters
G. Standby Loss Test for Flow-Activated Instantaneous Water Heaters
H. Test Set Up for Commercial Instantaneous Water Heaters and Hot Water Supply Boilers
I. Changes to the Standby Loss Test for Instantaneous Water Heaters and Hot Water Supply Boilers Other than Flow-Activated Instantaneous Water Heaters
J. Test Procedure for Rating Commercial Heat Pump Water Heaters
K. Fuel Input Rate
L. Default Values for Certain Test Parameters for Commercial Water Heating Equipment
M. Certification Requirements
IV. Procedural Issues and Regulatory Review
A. Review Under Executive Orders 12866
B. Review Under the Regulatory Flexibility Act
C. Review Under the Paperwork Reduction Act of 1995
D. Review Under the National Environmental Policy Act of 1969
E. Review Under Executive Order 13132
F. Review Under Executive Order 12988
G. Review Under the Unfunded Mandates Reform Act of 1995
H. Review Under the Treasury and General Government Appropriations Act, 1999
I. Review Under Executive Order 12630
J. Review Under the Treasury and General Government Appropriations Act, 2001
K. Review Under Executive Order 13211
L. Review Under Section 32 of the Federal Energy Administration Act of 1974
M. Description of Materials Incorporated by Reference
V. Public Participation
A. Attendance at the Public Meeting
B. Procedure for Submitting Requests to Speak and Prepared General Statements for Distribution

C. Conduct of the Public Meeting
D. Submission of Comments
E. Issues on Which DOE Seeks Comment
VI. Approval of the Office of the Secretary

I. Authority and Background

Title III, Part C[1] of the Energy Policy and Conservation Act of 1975 (EPCA or the Act), Public Law 94-163 (42 U.S.C. 6311-6317, as codified), added by Public Law 95-619, Title IV, section 441(a), sets forth a variety of provisions designed to improve energy efficiency.[2] It established the "Energy Conservation Program for Certain Industrial Equipment," a program covering certain commercial and industrial equipment (hereafter referred to as "covered equipment"), which includes the commercial water heating (CWH) equipment that is the subject of this rulemaking. (42 U.S.C. 6311(1)(K)) Title III, Part B[3] of EPCA (42 U.S.C. 6291–6309, as codified) sets forth a variety of provisions designed to improve energy efficiency and established the Energy Conservation Program for Consumer Products Other Than Automobiles. This includes consumer water heaters, which are also addressed in this rulemaking. (42 U.S.C. 6292(a)(4))

Under EPCA, energy conservation programs generally consist of four parts: (1) testing; (2) labeling; (3) establishing Federal energy conservation standards; and (4) certification and enforcement procedures. The testing requirements consist of test procedures that manufacturers of covered products and equipment must use as both the basis for certifying to DOE that their

[1] For editorial reasons, Part C was codified as Part A-1 in the U.S. Code.
[2] All references to EPCA in this document refer to the statute as amended through the Energy Efficiency Improvement Act of 2015 (EEIA 2015), Public Law 114-11 (April 30, 2015).
[3] For editorial reasons, upon codification in the U.S. Code, Part B was redesignated as Part A.

products and equipment comply with the applicable energy conservation standards adopted pursuant to EPCA, and for making representations about the efficiency of that equipment. (42 U.S.C. 6293(c); 42 U.S.C. 6295(s); 42 U.S.C. 6314; 42 U.S.C. 6316)

The initial test procedures for CWH equipment were added to EPCA by the Energy Policy Act of 1992 (EPACT 1992), Public Law 102-486, and correspond to those referenced in ASHRAE and Illuminating Engineering Society of North America (IESNA) Standard 90.1-1989 (i.e., ASHRAE Standard 90.1-1989) which went into effect on October 24, 1992. (42 U.S.C. 6314(a)(4)(A)) EPCA requires that if an industry test procedure that is referenced in ASHRAE Standard 90.1 is amended, DOE must amend its test procedure to be consistent with the amended industry test procedure, unless DOE determines that the amended test procedure is not reasonably designed to produce test results that reflect the energy efficiency, energy use, or estimated operating costs of the equipment during a representative average use cycle. In addition, DOE must determine that the amended test procedure is not unduly burdensome to conduct. (42 U.S.C. 6314(a)(2), (3) and (4)(B))

If DOE determines that a test procedure amendment is warranted, it must publish a proposed test procedure in the Federal Register and offer the public an opportunity to present oral and written comments. (42 U.S.C. 6314(b)(1)-(2)) When amending a test procedure, DOE must determine to what extent, if any, the proposed test procedure would alter the equipment's energy efficiency as determined under the existing test procedure. (42 U.S.C. 6293(e); 42 U.S.C. 6314(a)(4)(C))

The Energy Independence and Security Act of 2007 (EISA 2007), Public Law 110-140, amended EPCA to require that at least once every 7 years, DOE must review test procedures for each type of covered equipment, including CWH equipment, and either: (1) amend the test procedures if the Secretary determines that the amended test procedures would more accurately or fully comply with the requirements of 42 U.S.C. 6314(a)(2)-(3),[4] or (2) publish a notice of determination not to amend a test procedure. (42 U.S.C. 6314(a)(1)(A)) Under this requirement, DOE must review the test procedures for CWH equipment no later than May 16, 2019, which is 7 years after the most recent final rule amending the Federal test method for CWH equipment.[5] The final rule resulting from this rulemaking will satisfy the requirement to review the test procedure for CWH equipment within 7 years.

DOE's test procedure for CWH equipment is found at 10 CFR 431.106, *Uniform test method for the measurement of energy efficiency of commercial water heaters and hot water supply boilers (other than commercial heat pump water heaters)*.[6] DOE's test procedure for CWH equipment provides a method for determining the thermal efficiency and standby loss of CWH equipment. In a direct final rule for test procedures for CWH equipment, DOE

---

[4] 42 U.S.C. 6314(a)(2) requires that test procedures be reasonably designed to produce test results which reflect energy efficiency, energy use, and estimated operating costs of a type of industrial equipment (or class thereof) during a representative average use cycle (as determined by the Secretary), and not be unduly burdensome to conduct.
42 U.S.C. 6314(a)(3) requires that if the test procedure is a procedure for determining estimated annual operating costs, such procedure must provide that such costs are calculated from measurements of energy use in a representative average-use cycle (as determined by the Secretary), and from representative average unit costs of the energy needed to operate such equipment during such cycle. The Secretary must provide information to manufacturers of covered equipment regarding representative average unit costs of energy.
[5] DOE published a final rule in the *Federal Register* on May 16, 2012, that, in relevant part, amended its test procedure for commercial water-heating equipment. 77 FR 28928.
[6] DOE has reserved a place in its regulations for a test procedure for commercial heat pump water heaters at 10 CFR 431.107, *Uniform test method for the measurement of energy efficiency for commercial heat pump water heaters.*

incorporated by reference certain sections of the ANSI Standard Z21.10.3-1998 (ANSI Z21.10.3-1998), *Gas Water Heaters, Volume III, Storage Water Heaters With Input Ratings Above 75,000 Btu Per Hour, Circulating and Instantaneous*. 69 FR 61974, 61983 (Oct. 21, 2004). On May 16, 2012, DOE published a final rule for certain commercial heating, air-conditioning, and water-heating equipment in the Federal Register that, among other things, updated the test procedures for certain CWH equipment by incorporating by reference ANSI Z21.10.3-2011. 77 FR 28928, 28996. These updates did not materially alter DOE's test procedure for CWH equipment.

The American Energy Manufacturing Technical Corrections Act (AEMTCA), Public Law 112-210, was signed into law on December 18, 2012, and amended EPCA to require that DOE publish a final rule establishing a uniform efficiency descriptor and accompanying test methods for consumer water heaters and certain CWH equipment. (42 U.S.C. 6295(e)(5)) AEMTCA required DOE to replace the current efficiency metric for consumer water heaters (energy factor) and the current efficiency metrics for commercial water heaters (thermal efficiency and standby loss) with a uniform efficiency descriptor. (42 U.S.C. 6295(e)(5)(C)) Further, AEMTCA required that the uniform efficiency descriptor and accompanying test method apply, to the maximum extent possible, to all water heating technologies currently in use and to future water heating technologies. (42 U.S.C. 6295(e)(5)(H)) However, AEMTCA allowed DOE to exclude from the uniform efficiency descriptor, specific categories of covered water heaters that do not have residential uses, that can be clearly described, and that are effectively rated using the current thermal efficiency and standby loss descriptors. (42 U.S.C. 6295(e)(5)(F))

DOE published a final rule for test procedures for certain CWH equipment on July 11, 2014 ("July 2014 final rule"). 79 FR 40542. The final rule modified the current consumer water heater metric (energy factor) to create uniform energy factor (UEF), the descriptor to be used as the uniform efficiency descriptor for all consumer water heaters and certain CWH equipment that have residential uses. Id. at 40544. The final rule excluded certain CWH equipment from the uniform descriptor equipment that has no residential use, that can be clearly identified and described, and that are effectively rated using the current thermal efficiency and standby loss efficiency descriptors. In the July 2014 final rule, DOE defined and adopted a new test method for "residential-duty commercial water heaters," which are commercial water heaters that have residential uses. Id.

In this rulemaking for CWH equipment test procedures, DOE only considers amended test procedures for the CWH equipment classes that do not have residential applications and that are not "residential-duty commercial water heaters" as adopted in the July 2014 final rule.[7] On February 27, 2014, DOE published in the Federal Register a request for information (February 2014 RFI) to seek public comments on several issues associated with the current test procedure for CWH equipment. 79 FR 10999. DOE accepted comments and information on the February 2014 RFI until March 31, 2014, and considered all feedback received when developing the proposals contained in this rulemaking. Each of the issues raised in the February 2014 RFI is discussed in detail in section III, along with comments received on the issues and DOE's responses. In addition, several topics not addressed in the February 2014 RFI but brought up by interested parties in their comments are discussed in section III of this NOPR.

[7] Although DOE did not consider amended test procedures for residential-duty commercial water heaters, DOE proposes to amend the definitions pertaining to these equipment, as discussed in section 0.

In support of its rulemaking effort, DOE typically seeks comments from the public and uses them to conduct in-depth technical analyses of publicly-available test standards and other relevant information. As noted above, this NOPR discusses the comments received by DOE in response to the February 2014 RFI and summarizes all proposed updates and amendments to the current test procedure. In its efforts to continually engage the public and interested parties in the rulemaking process, DOE seeks data and public input on all aspects of this rulemaking, in order to improve the testing methodologies, to accurately reflect commercial use, and to produce repeatable results. DOE also requests feedback from interested parties and stakeholders on the proposed amendments to the current test procedures for CWH equipment.

II. Synopsis of the Notice of Proposed Rulemaking

The February 2014 RFI raised several issues regarding the thermal efficiency and standby loss test methods for CWH equipment. Several other issues which were not part of the RFI were brought up through stakeholder feedback and comments on the RFI. In this NOPR, DOE discusses all issues identified by DOE and interested parties, and proposes to modify the current test procedures based on these issues, as necessary, in order to improve the consistency and accuracy of test results generated using the DOE test procedure while minimizing test burden.

As provided in 10 CFR 431.105, the current DOE test procedure incorporates by reference the ANSI Z21.10.3-2011 test method for use in 10 CFR 431.106, and that latter provision specifically directs one to follow Exhibits G.1 and G.2 of the industry test procedure. In 2013, ANSI updated its test method and released a more recent version, i.e., ANSI Z21.10.3-2013/Canadian Standards Association (CSA) 4.3-2013, *Gas-fired Water Heaters, Volume III, Storage Water Heaters with Input Ratings Above 75,000 Btu Per Hour, Circulating and*

Instantaneous (hereinafter referred to as "ANSI Z21.10.3-2013"). In the February 2014 RFI, DOE stated its plan to amend its test procedure to reference ANSI Z21.10.3-2013, the updated industry test method for measuring thermal efficiency and standby loss. 79 FR 10999, 11001-11002 (Feb. 27, 2014). However, since publication of the February 2014 RFI, ANSI updated its test method twice. First, an updated version was approved on July 2, 2014, and released in August 2014, specifically, ANSI Z21.10.3-2014/ CSA 4.3-2014, *Gas-fired Water Heaters, Volume III, Storage Water Heaters with Input Ratings Above 75,000 Btu Per Hour, Circulating and Instantaneous* (hereinafter referred to as "ANSI Z21.10.3-2014"). Another updated version was then approved on October 5, 2015, and released in November 2015, specifically, ANSI Z21.10.3-2015/ CSA 4.3-2015, *Gas-fired Water Heaters, Volume III, Storage Water Heaters with Input Ratings Above 75,000 Btu Per Hour, Circulating and Instantaneous* (hereinafter referred to as "ANSI Z21.10.3-2015"). DOE is proposing to incorporate by reference annexes E.1 of this latest industry test procedure (ANSI Z21.10.3-2015) for measuring thermal efficiency and standby loss.

After a careful review of ANSI Z21.10.3-2015, DOE found one significant difference between the sections of the test standard that are currently referenced by DOE (i.e., Exhibits G.1 and G.2 of ANSI Z21.10.3-2011) and those contained in ANSI Z21.10.3-2015 (i.e., Annexes E.1 and E.2). This difference is in the temperature differential terms used in the equations to calculate standby loss in Annex E.2 of ANSI Z21.10.3-2015 and Exhibit G.2 of ANSI Z21.10.3-2011. The equations in Annex E.2 of ANSI Z21.10.3-2015 and Exhibit G.2 of ANSI Z21.10.3-2011 are meant to calculate standby loss, which is defined as the average hourly energy required to maintain the stored water temperature expressed as a percentage of the total heat content of the

stored water above room temperature. However, the temperature differential term used in the denominator of the standby loss equation in Annex E.2 of ANSI Z21.10.3-2015 does not represent the total heat content of the water heater. Therefore, DOE has tentatively concluded that it is appropriate to use the standby loss equation in Exhibit G.2 of ANSI Z21.10.3-2011, which is both accurate and best represents the standby loss expressed as a percentage per hour of the total heat content of the stored water above room temperature. Therefore, DOE proposes to include the equation for standby loss 'S' presented in Exhibit G.2 of ANSI Z21.10.3-2011 in the DOE test procedure for all covered commercial storage water heaters and storage-type instantaneous water heaters (see section III.F for discussion on DOE's proposed definition for "storage-type instantaneous water heater"). However, for instantaneous water heaters and hot water supply boilers other than storage-type instantaneous water heaters, DOE proposes separate standby loss test procedures and equations, as discussed in sections III.G and III.I. DOE did not find any other significant differences between Annexes E.1 and E.2 of ANSI Z21.10.3-2015 and Exhibits G.1 and G.2 of ANSI Z21.10.3-2011. Therefore, other than the reference for the standby loss equation, DOE proposes to update the reference in its test procedures for CWH equipment (as applicable) to the most recent version of the industry test standard. Specifically, DOE proposes to incorporate by reference Annex E.1 of ANSI Z21.10.3-2015. This issue is further discussed in section III.A of this rulemaking.

DOE's current test procedure for oil-fired CWH equipment at 10 CFR 431.106 also refers to ASTM Standard D2156-80 ("ASTM D2156-80"), "Standard Test Method for Smoke Density in Flue Gases from Burning Distillate Fuels." Specifically, this industry method is cited to determine that smoke in the flue does not exceed a No. 1 smoke spot number. A more recent version of this standard, ASTM Standard D2156-09 ("ASTM D2156-09"), "Standard Test

Method for Smoke Density in Flue Gases from Burning Distillate Fuels," was approved in 2009 and reapproved in 2013. DOE carefully reviewed the two versions of this industry method and identified no significant differences that would affect the determination of smoke spot number as referred to in DOE's test procedure. Therefore, DOE proposes to incorporate by reference ASTM D1256-09 for the purpose of determining the smoke spot number.

However, DOE also proposes clarifications to the procedure for determining the smoke spot number. First, DOE proposes to clarify that the smoke spot number must be determined prior to taking measurements for the efficiency tests (i.e., the thermal efficiency test or standby loss test). Specifically, for the thermal efficiency test, DOE proposes to require that the smoke spot number be determined after a steady-state condition has been reached but before beginning measurements for the thermal efficiency test. For the standby loss test, DOE proposes to require that the smoke spot number be determined after the first cut-out before beginning measurements for the standby loss test. However, DOE proposes not to require that the smoke spot test be conducted prior to beginning an efficiency test (i.e., thermal efficiency or standby loss) if no settings on the water heater have been changed and the water heater has not been turned off since the end of a previously run efficiency test. DOE also proposes that the requirements for when to conduct the smoke spot test also apply to measurement of the CO_2 reading, which is required by DOE's current test procedures for oil-fired CWH equipment at 10 CFR 431.106. Second, DOE proposes to require that the smoke measuring device be connected to an open-ended tube that projects into the flue ¼ to ½ of the pipe diameter. This proposed clarification regarding the smoke measuring device is based on the requirements for commercial space-heating boilers in the ANSI/AHRI Standard 1500 ("AHRI 1500-2015"), "2015 Standard for Performance Rating of

Commercial Space Heating Boilers." Because this requirement comes from an industry-accepted test method, DOE expects this requirement to lead to minimal test burden for manufacturers and would simply serve to clarify the test set-up.

DOE's current definition for "R-value" at 10 CFR 431.102 references two industry test methods: (1) ASTM Standard Test Method C177-97 ("ASTM C177-97"), "Standard Test Method for Steady-State Heat Flux Measurements and Thermal Transmission Properties by Means of the Guarded-Hot-Plate Apparatus"; and (2) ASTM Test Standard C518-91 ("ASTM C518-91"), "Standard Test Method for Steady-State Thermal Transmission Properties by Means of the Heat Flow Meter Apparatus." More recent versions of ASTM C177 and ASTM C518 were published in October 2013 and June 2010, respectively: (1) ASTM Standard Test Method C177-13 ("ASTM C177-13"), "Standard Test Method for Steady-State Heat Flux Measurements and Thermal Transmission Properties by Means of the Guarded-Hot-Plate Apparatus"; and (2) ASTM Test Standard C518-10 ("ASTM C518-10"), "Standard Test Method for Steady-State Thermal Transmission Properties by Means of the Heat Flow Meter Apparatus." After careful review, DOE has tentatively concluded that there are no substantive differences in the procedures for measuring R-value between the two versions of ASTM C177 or between the two versions of ASTM C518. Based upon its analysis, DOE proposes to incorporate by reference ASTM Standard Test Methods C177-13 and C518-10 and update its references to these versions in the definition for "R-value" at 10 CFR 431.102, in order to maintain up-to-date references to industry test methods.

Among the comments received by DOE on the published RFI, several commenters raised concerns with regards to the repeatability of the standby loss test method as set forth in the current DOE test method (which references Exhibit G.2 of ANSI Z21.10.3-2011). To address these concerns of test repeatability, DOE proposes several improvements to both the thermal efficiency and standby loss test methods, which are discussed in detail in section III.B of this rulemaking.

Unfired hot water storage tanks are covered equipment included in the scope of this rulemaking. These tanks store hot water and do not consume fuel or electricity for the purpose of heating water, so any energy efficiency improvements would target standby loss associated with heat loss from the stored water. Currently, unfired hot water storage tanks are required to have thermal insulation with a minimum thermal resistance (R-value) of 12.5 $°F \cdot ft^2 \cdot hr/Btu$. See 10 CFR 431.110. In the February 2014 RFI, DOE requested comment on whether the R-value requirement was an appropriate energy efficiency descriptor and whether it should adopt a standby loss test and metric to replace the current R-value requirement. DOE also noted that determining the R-value of a single sample does not assess whether this value is applicable to the entire tank surface area, including bottom, top, and fitting areas. 79 FR 10999, 11002 (Feb. 27, 2014). After considering public comments from stakeholders and interested parties, DOE proposes to adopt a standby loss test for unfired storage tanks that is based, in part, on existing industry test methods (i.e., GAMA Testing Standard IWH-TS-1 (March 2003 edition)). Energy conservation standards for unfired hot water storage tanks will remain in terms of the current insulation R-value requirement until DOE completes a future rulemaking to establish standards in terms of the proposed standby loss metric, presuming such metric is adopted in the test

procedure final rule. This proposed standby loss test method is discussed in detail in section III.C.

Another issue raised by DOE in the February 2014 RFI regarded the method of setting the tank thermostat prior to conducting the thermal efficiency test. 79 FR 10999, 11002-03 (Feb. 27, 2014). The current Federal test procedure at 10 CFR 431.106 references Exhibits G.1 and G.2 of ANSI Z21.10.3-2011, which requires water heaters to achieve a maximum mean tank temperature of 140 °F ± 5 °F after the thermostat reduces the gas supply to a minimum. However, some CWH equipment may experience difficulty in attaining a mean tank temperature of 140 °F ± 5 °F due to the design of the heat exchanger and positioning of the thermostat sensor. Such systems may in fact be able to supply water at a temperature of 140 °F ± 5 °F, but yet not meet the mean tank temperature requirement. As a result, DOE proposes to modify the test procedure for gas-fired and oil-fired storage water heaters and storage-type instantaneous water heaters to use the outlet water temperature as the set point for setting the thermostat, rather than the mean tank temperature. This change would still ensure the water heater provides water at the specified temperature, while accommodating models that are not designed to have high mean tank temperatures (i.e., condensing water heaters) or that rely upon stratification. The set point temperature value would remain the same at 140 °F ± 5 °F. However, for electric storage water heaters, DOE proposes to maintain a mean tank temperature requirement for the standby loss test because of complications with setting the thermostats for each electric heating element. Specifically, it is unclear how each thermostat could be set to provide a designated outlet water temperature in a way that would differ from the method used for a mean tank temperature requirement. Additional discussion of this issue is contained in section III.D.

In the February 2014 RFI, DOE requested information on whether any clarifications are needed in the thermal efficiency test procedure to indicate water flow requirements or to account for changes in thermal energy stored within the water heater during the duration of the test. 79 FR 10999, 11003 (Feb. 27, 2014). Based on the comments received, DOE has tentatively concluded that the current test procedure prescribed in 10 CFR 431.106 does not require any amendment to account for changes in stored thermal energy or water flow requirements during the thermal efficiency test method. The existing test procedure requires the water heater to attain steady-state conditions with no variation of outlet water temperature in excess of 2 °F over a period of 3 minutes. Once steady-state conditions are achieved, the internal tank temperature maintains a constant value, indicating that the stored energy in the water heater remains constant as long as the firing rate remains constant. While DOE has tentatively concluded that an amendment to account for stored energy changes is not needed, DOE proposes to introduce a statement clarifying that during the thermal efficiency test, the burner must continuously fire at the full firing rate (i.e., no modulation or cut-outs) for the entire duration of the thermal efficiency test, and the outlet water temperature must be maintained at 70 °F ± 2 °F above the supply water temperature. DOE also proposes to clarify that during the thermal efficiency and standby loss tests, no settings on the water heating equipment can be changed until measurements for the test have finished. Additional discussion of these issues is contained in section III.E.

In this NOPR, DOE proposes several changes to the definitions included in the regulations for consumer water heaters at 10 CFR 430.2 and for CWH equipment at 10 CFR 431.102. For consumer water heaters, DOE proposes to remove exemptions from the definitions that exclude units that heat water to temperatures greater than 180 °F and units with a storage

capacity greater than 120 gallons. DOE also proposes to remove the definitions for consumer "electric heat pump water heater" and "gas-fired heat pump water heater." DOE proposes the following changes to the definitions for CWH equipment: (1) replacing all mentions of the terms "input rating" or "rated input" with the term "fuel input rate" in the context of gas-fired or oil-fired CWH equipment, based on the proposed changes regarding fuel input rate that are further discussed in section III.K; (2) modifying DOE's definitions for "instantaneous water heater" and "storage water heater" by adding the input criteria that separate consumer water heaters and commercial water heaters and removing several phrases that do not serve to clarify coverage of units under the definitions; and (3) removing the definition of "packaged boiler." DOE also proposes to modify the definition for "residential-duty commercial water heater" by removing from its scope the following classes, for which the input criteria indicating residential application do not allow classification of any units: electric storage water heaters, heat pump water heaters with storage, gas-fired instantaneous water heaters, and oil-fired instantaneous water heaters. Additional discussion of these proposed changes to DOE's definitions for consumer water heaters and CWH equipment is provided in section III.F.

Water heaters with storage tanks and submerged fire-tube heat exchangers that have input ratings above 4,000 Btu/h per gallon of water stored are currently classified as instantaneous water heaters and hot water supply boilers with a storage volume greater than or equal to 10 gallons. However, DOE believes that these units that are equipped with storage tanks are fundamentally different from other instantaneous water heaters, and, therefore, the Department proposes to define the term "storage-type instantaneous water heater." DOE also proposes that such units would be tested according to the same method as used for commercial storage water heaters. Additional discussion of these issues are contained in section III.F.4.

Instantaneous water heaters and hot water supply boilers are covered equipment subject to the current Federal test procedure as set forth in 10 CFR 431.106. In response to the February 2014 RFI, AHRI raised an issue with regards to the applicability of the standby loss test procedure described in Exhibit G.2 of ANSI Z21.10.3-2011 for instantaneous water heaters and hot water supply boilers that have no means of initiating burner operation without an active flow of water through the equipment. Additionally, ANSI Z21.10.3-2015 was updated from previous versions of the industry testing standard to include a new test method for measuring the standby loss of tube-type instantaneous water heaters, which AHRI recommended DOE use for determining the standby loss of such instantaneous water heaters and hot water supply boilers. DOE identified numerous problematic issues with this procedure and tentatively decided not to incorporate it by reference in its test procedures for CWH equipment. (The AHRI comments and this test method are discussed it in greater detail, along with DOE's proposed standby loss test procedure for flow-activated instantaneous water heaters, in section III.G.) The current standby loss test procedure involves shutting off the flow of water through the water heater and calculating the amount of energy required to raise the internally stored water temperature to a thermostatically-set value when it drops to a point at which it needs to be reheated. For such a test, it is assumed that when the stored water reaches the minimum allowable water temperature (below the thermostat set point) a control signal activates that will initiate the next firing or heating cycle. This is true for most CWH equipment; however, flow-activated instantaneous water heaters require flow of water through the heater to initiate the next firing or heating cycle. In these designs, if there is no continuous water flow, the next firing or heating cycle is not triggered even if the temperature of hot water inside the heater falls below the thermostat set point. To address this issue, DOE proposes to adopt a separate standby loss test for flow-

activated instantaneous water heaters. DOE currently only prescribes standby loss standards for gas-fired and oil-fired instantaneous water heater and hot water supply boilers with a storage capacity greater than or equal to 10 gallons. The proposed test method would apply to all units that meet the proposed definition for "flow-activated instantaneous water heater," and is described in detail in section III.G.

The current thermal efficiency and standby loss test method requires the water heater to be set up as per Figure 2 in ANSI Z21.10.3-2011, which is identical to Figure 3 in ANSI Z21.10.3-2015. Although the figures provide an unscaled pictorial arrangement of the test set up, neither Figure 2 in ANSI Z21.10.3-2011 nor Figure 3 in ANSI Z21.10.3-2015 specifies the exact location of the outlet water temperature measurement. DOE understands that this unspecified location for outlet water temperature measurement could lead to inconsistent test results and an inaccurate representation of the actual outlet water temperature, especially if the outlet water temperature represents the internal stored water temperature for instantaneous water heaters and hot water supply boilers (as proposed in this NOPR and discussed in section III.G and III.I). Moreover, the temperature-sensing installations, as set forth in Annex E.1 of ANSI Z21.10.3-2015, do not provide clear instructions for installing temperature-sensing means for instantaneous water heaters and hot water supply boilers. Considering the issues related to temperature measurement for instantaneous water heaters and hot water supply boilers, DOE proposes to specify the temperature-sensing location for the outlet water temperature such that the tip or junction of the sensor is less than or equal to 5 inches away from the water heater jacket and requirements for placement of the temperature-sensing probe in the water line for both supply and outlet water measurement. In addition to this issue, DOE also proposes to add supply and outlet water valves at locations closer to the water heater. Specifically, DOE proposes to add

a supply water valve within a distance of 5 inches from the water heater jacket and an outlet water valve within a distance of 10 inches from the water heater jacket. Currently, the test set up does not clearly indicate the location of the water supply valves. These valves would be turned off at the start of the standby loss test for instantaneous water heaters and hot water supply boilers (as proposed in this NOPR and discussed in section III.G and III.I). DOE also proposes to add provisions for outlet water temperature measurement and placement of water valves for instantaneous water heaters and hot water supply boilers that have multiple supply and outlet water connections and that are shipped with piping installed by the manufacturer. Finally, DOE proposes to clarify the conditions for using a re-circulating loop. The proposed provisions are similar to those specified in ANSI Z21.10.3-2011 (and ANSI Z21.10.3-2015), and further details on this issue are contained in section III.H.

In response to the RFI, manufacturers also raised the issue of the applicability of the current Federal standby loss test procedure to instantaneous water heaters and hot water supply boilers that are not tank-type water heaters and that have a storage capacity of ten gallons or more (all comments on this topic are discussed in section III.I of this NOPR). The Federal standby loss test procedure in 10 CFR 431.106 incorporates by reference Exhibit G.2 of ANSI Z21.10.3-2011, which requires the measurement of mean tank temperature to calculate standby loss. Instantaneous water heaters and hot water supply boilers generally are not equipped with an integral storage tank, but rather the stored water is contained within the heat exchanger. Therefore, measuring the mean tank temperature for such type of equipment would not be possible (as a storage tank does not exist). Moreover, due to the complex geometry and design of the heat exchangers of such equipment, obtaining an accurate value of the mean stored water temperature inside the heat exchanger would be difficult, or in some cases, may be impossible.

To address this issue, DOE proposes to use the outlet water temperature as a conservative estimate for the mean tank temperature. This approach is similar to that used for the standby loss test for flow-activated water heaters and would be significantly less burdensome than using other means to accurately measure the stored water temperature inside the heat exchanger. Additional details on this test procedure are provided in section III.I.

In the February 2014 RFI, DOE also requested comments on development of a test procedure for commercial heat pump water heaters (CHPWHs). 79 FR 10999, 11003 (Feb. 27, 2014). Based on the comments received, DOE proposes to incorporate by reference ANSI/ASHRAE Standard 118.1-2012, *Method of Testing for Rating Commercial Gas, Electric, and Oil Service Water-Heating Equipment* (ANSI/ASHRAE Standard 118.1-2012) to use as the basis for the Federal CHPWH test method, with several modifications discussed in further detail in III.J. DOE also proposes to adopt rating conditions for four categories of CHPWHs: (1) air-source CHPWHs; (2) direct geo-exchange CHPWHs; (3) ground water-source CHPWHs; and (4) indoor water-source CHPWHs. The proposed rating conditions are based on ANSI/AHRI Standard 1300 (I-P)-2013: *Performance Rating of Commercial Heat Pump Water Heaters*. Additional discussion of this proposed test procedure is contained in section III.J.

In its current regulations for CWH equipment in subpart G to 10 CFR part 431, DOE includes several terms referring to the input capacity, and does not include any method for determining or verifying the input capacity during testing. In this NOPR, DOE proposes to define "fuel input rate" for gas-fired and oil-fired CWH equipment and proposes a procedure for calculating the fuel input rate during the thermal efficiency test. DOE proposes that the gas consumption be measured every 10 minutes, and that the calculated fuel input rates for each 10-

minute interval of the thermal efficiency test cannot vary by more than ± 2 percent between each reading. DOE also proposes means to verify the fuel input rate. Additional discussion of these proposed changes regarding fuel input rate is contained in section III.K.

In this NOPR, DOE proposes several changes to its certification requirements at 10 CFR part 429. First, DOE proposes to add requirements to 10 CFR 429.44 that manufacturers must certify whether gas-fired and oil-fired instantaneous water heaters and hot water supply boilers contain submerged heat exchangers, so that such models can be classified under DOE's proposed definition for "storage-type instantaneous water heaters." Second, DOE proposes to require manufacturers to certify whether instantaneous water heaters and hot water supply boilers require flow through the water heater to initiate burner ignition. Further discussion of these proposed changes are included in section III.M. Additionally, DOE proposes default values for these parameters to be used in testing if the parameters are not reported in manufacturer literature shipped with the equipment or the supplemental test instructions. Further discussion of these proposed default values are included in section III.L.

In any rulemaking to amend a test procedure, DOE must determine to what extent, if any, the proposed test procedure would alter the measured energy efficiency of any covered product as determined under the existing test procedure. (42 U.S.C. 6293(e)(1); 42 U.S.C. 6314(a)(4)(C)) DOE expects that the proposed changes to the test procedure will not significantly alter the efficiency ratings for a most classes of CWH equipment. There could, however, be changes to the measured energy efficiency for unfired hot water storage tanks. If DOE adopts the changes to the existing test procedures proposed in this NOPR for those

products, then DOE will establish energy conservations standards for unfired hot water storage tanks in terms of a new standby loss metric in a separate rulemaking, and the test procedure changes related to unfired hot water storage tanks will not apply until compliance is required with the new standards. DOE also proposes a new test procedure for measuring standby loss of flow-activated instantaneous water heaters with a storage capacity greater than or equal to 10 gallons. However, DOE does not believe this proposed test procedure will affect the measured energy efficiency of flow-activated instantaneous water heaters.

III. Discussion

In response to the February 2014 RFI, DOE received eight written comments from the following interested parties: Bradford White Corporation (Bradford White); A.O. Smith Corporation (A. O. Smith); HTP, Inc. (HTP); Rheem Manufacturing Company (Rheem); Edison Electric Institute (EEI); Air-Conditioning, Heating, and Refrigeration Institute (AHRI); American Public Power Association (APPA); and the American Council for an Energy-Efficient Economy (ACEEE) and National Resources Defense Council (NRDC), who filed a joint comment (henceforth referred to as "Joint Advocates"). These interested parties commented on a range of issues, including those identified by DOE in the February 2014 RFI, as well as several other pertinent issues. The issues, the comments received, DOE's responses to those comments, and the resulting proposed changes to the test procedures for CWH equipment, are discussed in the following subsections.

Updated Industry Test Methods

DOE's test procedure for measuring the energy efficiency for CWH equipment currently incorporates by reference the industry standard ANSI Z21.10.3-2011 at 10 CFR 431.105. Additionally, DOE lists ASTM Standard Test Methods D2156-80, C177-13, and C518-10 as sources of information and guidance in 10 CFR 431.104. DOE defines "ASTM Standard Test Method D2156-80" at 10 CFR 431.102, and points to this source in DOE's current test procedure at 10 CFR 431.106. DOE points to ASTM C177-13 and ASTM C518-10 in its definition for "R-value" at 10 CFR 431.102. The following subsections discuss proposed revisions to DOE's test procedure for CWH equipment vis-à-vis these industry standards.

1. ANSI Z21.10.3 Testing Standard

As noted above, DOE's test procedure for measuring the energy efficiency for CWH equipment currently incorporates by reference the industry standard ANSI Z21.10.3-2011 at 10 CFR 431.105. Specifically, the DOE test procedures at 10 CFR 431.106 directs one to follow Exhibits G.1 and G.2 of ANSI Z21.10.3-2011 for measuring thermal efficiency and standby loss, respectively. An updated edition of the industry test method, ANSI Z21.10.3-2013/CSA 4.3-2013, was approved on March 25, 2013, and released in July 2013.

In the February 2014 RFI, DOE requested feedback on the appropriateness of replacing references to ANSI Z21.10.3-2011 with equivalent references to ANSI Z21.10.3-2013 (which, at that time, was the most current industry testing standard). 79 FR 10999, 11001-02 (Feb. 27, 2014). All parties that commented on this issue agreed with DOE that ANSI Z21.10.3-2013 was

an appropriate replacement for ANSI Z21.10.3-2011. (Bradford White, No. 8 at p. 1;[8] Rheem, No. 3 at p. 1; HTP, No. 5 at pp. 1-2; A. O. Smith, No. 7 at p. 1; Joint Advocates, No. 4 at p. 1; and AHRI, No. 2 at p. 1)

However, since publication of the February 2014 RFI, ANSI updated its test method twice. First, an updated version was approved on July 2, 2014, and released in August 2014 – ANSI Z21.10.3-2014/Canadian Standards Association (CSA) 4.3-2014, *Gas-fired Water Heaters, Volume III, Storage Water Heaters with Input Ratings Above 75,000 Btu Per Hour, Circulating and Instantaneous* (hereinafter referred to as "ANSI Z21.10.3-2014"). Another updated version was then approved on October 5, 2015, and released in November 2015 – ANSI Z21.10.3-2015/CSA 4.3-2015, *Gas-fired Water Heaters, Volume III, Storage Water Heaters with Input Ratings Above 75,000 Btu Per Hour, Circulating and Instantaneous* (hereinafter referred to as "ANSI Z21.10.3-2015"). DOE reviewed ANSI Z21.10.3-2015 and compared it with ANSI Z21.10.3-2011, and found one significant difference between the sections of the test method that DOE currently references in its test procedures for CWH equipment (i.e., Exhibits G.1 and G.2 of ANSI Z21.10.3-2011) and those contained in ANSI Z21.10.3-2015 (i.e., Annexes E.1 and E.2). In Exhibit G.2 of ANSI Z21.10.3-2011, the current DOE test procedure, the equation for standby loss 'S' is presented as:

$$S = \left\{ \left[\frac{(Cs)(Qs)(H) + Ec}{(K)(Va)(\Delta T_3)(t)} \right] - \left[\frac{\Delta T_4}{(\Delta T_3)(t)\left(\frac{E_t}{100}\right)} \right] \right\} \times 100$$

[8] A notation in this form provides a reference for information that is in the docket of DOE's rulemaking to develop test procedures for commercial water heating equipment (Docket No. EERE–20014–BT–TP–0008), which is maintained at www.regulations.gov. This notation indicates that the statement preceding the reference is document number 8 in the docket for the test procedure rulemaking for commercial water heating equipment, and appears at page 1 of that document.

In Annex E.2 of ANSI Z21.10.3-2015, the equation is exactly the same, except that the ΔT_3 term in the denominator of the second term of the equation is replaced by ΔT_4. Based on the definitions for the terms provided in both ANSI Z21.10.3-2011 and ANSI Z21.10.3-2015, ΔT_3 refers to the difference between the average value of the mean tank temperature and the average value of the ambient room temperature expressed in °F. The term ΔT_4 is defined as the difference between the final and the initial mean tank temperature.

DOE has tentatively concluded that the standby loss equation provided in ANSI Z21.10.3-2011 (and ANSI Z21.10.3-2013) is appropriate. If the ΔT_3 term is replaced with the ΔT_4 term in the second term of the standby loss equation as specified by ANSI Z21.10.3-2015, then the term ΔT_4 would cancel out, and the equation will not include the temperature difference between the final and initial mean tank temperature that corresponds to the heat lost by the water heater during the course of the test. Therefore, DOE proposes to adopt as part of appendices A and B to subpart G of part 431 the standby loss equation as specified in Exhibit G.2 of ANSI Z21.10.3-2011 (and also included in ANSI Z21.10.3-2013) for calculating the standby loss of all storage water heaters and storage-type instantaneous water heaters. DOE also proposes to re-arrange the terms of the equation to improve the readability of the equation, and remove the gas consumption term for electric water heaters. For instantaneous water heaters and hot water supply boilers other than storage-type instantaneous water heaters, DOE proposes separate standby loss test procedures and equations in sections III.G and III.I.

DOE did not find any other substantive differences between Exhibits G.1 and G.2 of ANSI Z21.10.3-2011 and Annexes E.1 and E.2 of ANSI Z21.10.3-2015. Therefore, DOE

proposes to incorporate by reference Annex E.1 of ANSI Z21.10.3-2015 in its proposed test procedures for CWH equipment. DOE does not propose to incorporate by reference Annex E.2 of ANSI Z21.10.3-2015; however, DOE has included certain language from Annex E.2 in its standby loss test procedures proposed in this NOPR.

ANSI Z21.10.3-2015 also includes a new efficiency test procedure – Annex E.3, "Method of test for measuring standby loss for tube type instantaneous water heaters with 10 or greater gallons of storage." This procedure provides a method to test standby loss of instantaneous water heaters and hot water supply boilers, including those that require flow of water to activate the burner or heating element (i.e., "flow-activated instantaneous water heaters"). DOE reviewed this test procedure, and it is discussed in further detail in section III.G, where DOE proposes a new standby loss test procedure for flow-activated instantaneous water heaters.

DOE also proposes a procedure similar to that specified in section 5.27 of ANSI Z21.10.3-2015 for determining the storage volume of CWH equipment. DOE's proposed language only includes clarifying differences from the language in section 5.27 of ANSI Z21.10.3-2015, and DOE believes that the clarifying differences would not affect conduct of the test procedure between DOE's proposed procedure and the method included in section 5.27 of ANSI Z21.10.3-2015. DOE's proposed procedure for determining storage volume is discussed in further detail in section III.G.

2. ASTM Standard Test Method D2156

DOE's current test procedure for oil-fired CWH equipment at 10 CFR 431.106 points to ASTM Standard Test Method D2156-80. Specifically, DOE requires that smoke in the flue does not exceed No. 1 smoke as measured by the procedure in ASTM D2156-80. However, there is a more recent version of ASTM D2156 that was approved on December 1, 2009, and reapproved on October 1, 2013. After careful review of D2156-80 and D2156-09, DOE has tentatively concluded that no substantive changes were made between these versions in the test method for determining the smoke spot number. Therefore, DOE proposes to incorporate by reference this newer version, ASTM D2156-09, in its test procedures for oil-fired CWH equipment, in appendices A, C, and E to subpart G of 10 CFR part 431.

DOE's current requirement for smoke spot number of flue gas for oil-fired CWH equipment requires that the smoke in the flue does not exceed No. 1 smoke, but does not specify when during the test to determine the smoke spot number. To improve consistency and repeatability of testing of CWH equipment, DOE is proposing to specify when to conduct the smoke spot test. DOE considered several options for this specification. The first option DOE considered would be to require determination of the smoke spot number after steady-state operation has been achieved, but prior to beginning measurement for the thermal efficiency test. The second option considered would be to require determination of the smoke spot number before and after conduct of the test. The third option considered would be to require determination of the smoke spot number before, after, and during the test. Specifically, in the third option, the smoke spot number would be determined during the thermal efficiency test 15 minutes after the beginning of the test. This is similar to the requirement to determine the smoke

spot number every 15 minutes during the thermal efficiency and combustion efficiency tests that is specified for commercial space heating boilers in AHRI 1500-2015.

After considering these three options and the relative benefits and test burden they might provide, DOE has tentatively concluded that determining the smoke spot number prior to conduct of efficiency testing sufficiently assesses the combustion performance while minimizing test burden for manufacturers. DOE reasoned that it is unlikely for the smoke density to change to a significant extent during a steady-state test if the burner settings are maintained throughout the test. As discussed in section III.E, DOE is also proposing to add a clarifying statement to the test procedure stating that the settings on CWH equipment during the thermal efficiency test are not be changed once steady-state conditions have been established. Therefore, DOE has tentatively concluded that it is not necessary to require determination of the smoke spot number during or after efficiency testing, and rather proposes to require determination of the smoke spot number before beginning measurement for efficiency testing. Specifically, for the thermal efficiency test, DOE proposes to require determination of the smoke spot number after steady-state condition has been reached (as determined by no variation of outlet water temperature in excess of 2 °F over a 3-minute period). For the standby loss test, DOE proposes to require determination of the smoke spot number after the first cut-out before beginning measurements for the standby loss test. DOE also proposes to require that the CO_2 reading, which is required to be measured when testing oil-fired CWH equipment under DOE's current test procedures specified at 10 CFR 431.106, also be measured at the time required for determination of the smoke spot number.

DOE also proposes to clarify that the smoke spot test and measurement of CO_2 reading are required before conduct of the thermal efficiency test or standby loss test (as applicable) of oil-fired CWH equipment with one exception. DOE proposes that, if no settings on the water heater have been changed and the water heater has not been turned off since the end of a previously run efficiency test, a second smoke spot test or CO_2 reading is not required prior to beginning another efficiency test (i.e., thermal efficiency or standby loss).

Additionally, to further clarify the appropriate method for determining the smoke spot number, DOE proposes to adopt specifications to the test procedure for the set-up for measuring the smoke density. Specifically, DOE proposes to require that the smoke measuring device be connected to an open-ended tube, and that this tube must project into the flue ¼ to ½ of the pipe diameter. These proposed requirements are from the same as those specified for commercial space-heating boilers in AHRI 1500-2015.

Issue 1: DOE seeks comment on its proposed incorporation by reference of ASTM D2156-09, and on its proposed additional specifications for how to set up the smoke spot test, and when to conduct the smoke spot test and measure the CO_2 reading.

3. ASTM Test Standards C177-13 and C518-10

DOE's current definition for "R-value" at 10 CFR 431.102 references two industry test methods: ASTM Standard Test Method C177-97 and ASTM Test Standard Method C518-91.

A more recent version of ASTM C177 was approved in September 2013 and published in October 2013 (ASTM C177-13). After careful review, DOE has tentatively concluded that there are no substantive differences in the procedures for measuring R-value between the two versions of ASTM C177. Additionally, a more recent version of ASTM C518 was approved in May 2010 and published in June 2010 (ASTM C518-10). After careful review, DOE has tentatively concluded that there are no substantive differences in the procedures for measuring R-value between the two versions of ASTM C518. Therefore, DOE proposes to incorporate by reference ASTM Standard Test Methods C177-13 and C518-10 and to update its references to these versions in the definition for "R-value" at 10 CFR 431.102.

Issue 2: DOE seeks comment on its proposed incorporation by reference of ASTM C177-13 and C518-10 for the definition of "R-value."

B. Test Method Repeatability and Ambient Test Conditions

As discussed in section III.A of this rulemaking, the DOE test procedure for CWH equipment currently incorporates by reference ANSI Z21.10.3-2011 at 10 CFR 431.105, and DOE proposes to incorporate by reference Annex E.1 of the updated version of the standard, ANSI Z21.10.3-2015, for measuring thermal efficiency and standby loss, respectively.

The test method for thermal efficiency of CWH equipment in Annex E.1 of ANSI Z21.10.3-2015 (and also in Exhibit G.1 of ANSI Z21.10.3-2011) requires that the thermostat be set so that the gas supply is reduced to a minimum, once the mean tank temperature reaches 140 °F ± 5 °F. Then water is supplied continuously to the water heater at a temperature of 70 °F ± 2

°F. The outlet water temperature is adjusted by varying the flow rate until the temperature is constant at 70 °F ± 2 °F above the supply water temperature. After the outlet water reaches steady state, water flow (measured by weight) is recorded for a 30-minute test period, along with supply and outlet water temperatures, the ambient room temperature, and fuel and electricity consumption. These data collected during the 30-minute test period are used to calculate the thermal efficiency.

The standby loss test method in Annex E.2 of ANSI Z21.10.3-2015 (and also in Exhibit G.2 of ANSI Z21.10.3-2011) stipulates that a commercial water heater must be set up as described for the thermal efficiency test and that the unit must be put into operation with the burner gas supply opened. After the first burner cut-out,[9] the unit is allowed to remain in standby mode until the second burner cut-out, at which point the collection of test data begins. Test data are recorded at 15 minute intervals, and the test ends at either the first cut-out after 24 hours have elapsed, or when 48 hours have elapsed, whichever occurs first. The ambient room temperature, mean tank temperature, fuel and electricity consumption, and time are measured during the test and used to calculate the standby loss.

In the February 2014 RFI, DOE requested information and data pertaining to the repeatability of thermal efficiency and standby loss test methods included in the ANSI Z21.10.3-2011 and ANSI Z21.10.3-2013 test methods. 79 FR 10999, 11001-02 (Feb. 27, 2014).

[9] By "burner cut-out," DOE refers to when the energy supply to a burner is reduced to a minimum.

HTP commented that the thermal efficiency test is repeatable and is reasonably consistent between testing sites. (HTP, No. 5 at p. 2) No other interested parties provided information on the repeatability of the thermal efficiency test method in ANSI Z21.10.3.

Several parties provided comments regarding the repeatability of the standby loss test method. HTP commented that the standby loss test method produces data with significant lab-to-lab variation in test results and attributed this variation to the physics of the test and the ambient conditions of the test. HTP suggested investigating the effects of stipulating a maximum air draft in the test environment on repeatability of the standby loss test. (HTP, No. 5 at p. 2) HTP and AHRI commented that due to the small amount of energy consumption measured during the standby loss test, the error and variation associated with the tolerances of commercially-available test instrumentation has a larger influence on test results, resulting in a greater degree of variance for the standby loss test compared to the thermal efficiency test. (HTP, No. 5 at p. 2 and AHRI, No. 2 at p. 1)

Based on these comments from interested parties, DOE investigated various potential test procedure modifications to reduce the variability of results from the test procedures for thermal efficiency and standby loss. In addition, DOE conducted investigative testing that helped inform the proposals discussed in this NOPR. DOE proposes the following seven modifications to the current thermal efficiency and standby loss test procedures, after tentatively determining that these modifications would reduce variation in results: (1) stipulating a maximum air draft requirement of 50 ft/min as measured prior to beginning the thermal efficiency or standby loss tests; (2) tightening the ambient room temperature tolerance from ± 10.0 °F to ± 5.0 °F and the

allowed variance from mean ambient temperature from ± 7.0 °F to ± 2.0 °F; (3) requiring measurement of test air temperature – the temperature of entering combustion air – and requiring the test air temperature not vary by more than ± 5 °F from the ambient room temperature at any measurement interval during the thermal efficiency and standby loss tests for gas-fired and oil-fired CWH equipment; (4) establishing a requirement for ambient relative humidity of 60 percent ± 5 percent during the thermal efficiency and standby loss tests for gas-fired and oil-fired CWH equipment; (5) requiring a soak-in period prior to testing in which the water heater must sit without any draws taking place for at least 12 hours from the end of a recovery from a cold start; (6) specifying the locations of inlet and outlet temperature measurements for storage water heaters, storage-type instantaneous water heaters, and UFHWSTs; and (7) decreasing the time interval for data collection from fifteen minutes to 30 seconds in the thermal efficiency and standby loss tests. While manufacturers cited concerns regarding only the repeatability of the standby loss test in response to comments to the February 2014 RFI, DOE has tentatively concluded that the following proposed modifications would improve the repeatability of both tests. Unless otherwise specified in the following paragraphs, DOE proposes that these changes would apply to thermal efficiency and standby loss tests for all CWH equipment (as applicable).

(1) Addition of a maximum air draft stipulation, as recommended by HTP. This modification would allow for more consistent ambient conditions between tests and testing locations, as well as limit the effect of air draft on testing results. DOE proposes to add a requirement that while conducting the thermal efficiency and standby loss tests and during the proposed soak-in period (as applicable), a water heater must be protected from drafts of more than 50 ft/min from room ventilation registers, windows, or other

external sources of air movement, to be measured within three feet of the jacket of the water heater. This requirement is similar to the requirement adopted for testing consumer water heaters and certain commercial water heaters in the July 2014 final rule. 79 FR 40542, 40569 (July 11, 2014). DOE notes that Annex E.1 of ANSI Z21.10.3-2015 requires that water heater placement in the test room shall be protected from drafts. This modification simply clarifies the meaning of "protected from drafts" by setting a requirement for the maximum allowable draft during the test. DOE proposes that the air draft be measured prior to beginning the soak-in period and thermal efficiency and standby loss tests, and that no actions can be taken during the conduct of the tests or the soak-in period that would increase the air draft near the water heater being tested.

(2) A decrease in the allowed maximum variance for ambient room temperature for both the thermal efficiency and standby loss tests. The current test procedure at 10 CFR 431.106 references Exhibits G.1 and G.2 of ANSI Z21.10.3-2011, which require that the ambient room temperature be maintained at 75 °F ± 10 °F, and that the ambient room temperature not vary by more than ± 7 °F from the average ambient room temperature during the test. DOE proposes requiring that the ambient room temperature be maintained at 75 °F ± 5 °F and that the room temperature not vary by more than ± 2.0 °F from the average ambient room temperature while setting thermostats and verifying steady-state operation, between the first and second cut-outs prior to the standby loss test (as applicable), and during the thermal efficiency and standby loss tests and proposed soak-in period (as applicable) for all CWH equipment.

(3) Addition of a requirement for measurement of test air temperature for gas-fired and oil-fired commercial water heating equipment. DOE understands that the entering air temperature can have a significant impact on combustion in gas-fired and oil-fired CWH equipment. To improve repeatability of the thermal efficiency and standby loss tests for these classes of equipment, DOE proposes to require measurement of test air temperature, within 2 feet of the air inlet to the water heater. For CWH equipment that does not have a specific air inlet, DOE proposes that the test air temperature be measured within 2 feet of the jacket of the water heater closest to where air would be drawn for combustion. DOE also proposes a requirement that the test air temperature may not vary by more than ± 5 °F from the ambient room temperature at any measurement interval during the course of the thermal efficiency or standby loss tests (as applicable) or while establishing steady-state operation prior to the thermal efficiency test for gas-fired and oil-fired CWH equipment. For units with multiple air inlets, DOE proposes that the test air temperature must be measured at each air inlet, and that the specified tolerance on deviation from the ambient room temperature must be maintained at each air inlet. This required tolerance for test air temperature was modeled after AHRI 1500-2015 in order to remain consistent with common industry practices. However, DOE proposes that this test air temperature requirement not apply to the standby loss test for flow-activated instantaneous water heaters proposed in section III.G of this NOPR, because the burner will not activate during the test. DOE also does not propose a test air temperature requirement for electric water heaters because electric water heaters are not powered by combustion, and, therefore, the test air temperature does not affect the efficiency of the heating elements.

(4) Establishment of a requirement for ambient relative humidity of 60 percent ± 5 percent for gas-fired and oil-fired commercial water heating equipment. DOE understands that humidity can have a significant effect on the tested efficiency of gas-fired and oil-fired CWH equipment, particularly condensing equipment. High humidity would enable equipment to capture more latent heat from combustion gases, thereby resulting in a higher measured efficiency. Therefore, the lack of a specification for ambient humidity in DOE's current test procedures for gas-fired and oil-fired CWH equipment can lead to variation in test results between test labs. DOE recognizes that this effect would be noticeable in tests for both thermal efficiency and standby loss. Therefore, DOE proposes to amend its test procedures by specifying a requirement that ambient relative humidity be set and maintained at 60 percent ± 5 percent for gas-fired and oil-fired CWH equipment while verifying steady-state operation and during the thermal efficiency and standby loss tests, so as to minimize this effect, which should reduce variability in test results. However, DOE proposes that this ambient humidity requirement not apply to the standby loss test for flow-activated instantaneous water heaters proposed in section III.G of this NOPR, because the burner will not activate during the test. DOE also does not propose an ambient humidity requirement for electric water heaters because electric water heaters are not powered by combustion and, therefore, the ambient air humidity does not affect the efficiency of the heating elements. Also, DOE proposes that the ambient relative humidity be measured and recorded at the same location as the test air temperature, and at 30-second intervals during the entire test. For units with multiple air inlets, DOE proposes that the ambient relative humidity must be measured at each air inlet, and that 60 percent ± 5 percent must be maintained at each air inlet. DOE proposes

that the ambient relative humidity must remain within the specified range at all times during conduct of the thermal efficiency and standby loss tests.

(5) Addition of a requirement to perform a pre-test conditioning phase, also known as a soak-in period, for storage water heaters and storage-type instantaneous water heaters. This proposed provision would require that the water heater remain idle (i.e., no water draws) for at least 12 hours with the thermostats maintained at settings that would achieve the required water temperature (see section III.D for further detail on proposed requirements for setting the tank thermostat), prior to conducting either a thermal efficiency test or standby loss test. This modification is similar to the soak-in period requirement adopted for consumer water heaters and certain commercial water heaters in the July 2014 final rule. 79 FR 40542, 40571 (July 11, 2014). This requirement would help minimize transient heat transfer effects that may reduce the reproducibility of the current standby loss test. However, DOE proposes not to require a soak-in period be conducted prior to beginning an efficiency test (i.e., thermal efficiency or standby loss) if no settings on the water heater have been changed and the water heater has not been turned off since the end of a previously run efficiency test. DOE proposes a requirement for a soak-in period for unfired hot water storage tanks with different test conditions in section III.C.

(6) Specifying the locations for inlet and outlet water temperature measurement for storage water heaters, storage-type instantaneous water heaters, and unfired hot water storage tanks. DOE's current test procedure for CWH equipment incorporates by reference the requirement in Exhibit G.1 of ANSI Z21.10.3-2011 that the inlet and outlet piping be

immediately turned vertically downward from the connections on a tank-type water heater to form heat traps and that the thermocouples for measuring inlet and outlet water temperatures be installed before the inlet heat trap piping and after the outlet heat trap piping. While DOE agrees with the general position of the inlet and outlet thermocouples relative to the heat trap piping, the precise location of the thermocouples in terms of distance away from the water heater is not specified. The absence of a clearly defined location for the thermocouples can contribute to variability in the test results. Considering this issue, DOE proposes that the thermocouples be placed with total vertical piping length of 24 inches. For water heaters with vertical connections, the 24 inches of total vertical piping distance is divided into 6 inches of vertical piping upstream from the turn for the heat trap and 18 inches downstream from the turn for the heat trap. For water heaters that have horizontal water connections, DOE proposes that the thermocouples be placed with total horizontal piping length between the thermocouple location and the connection port of six inches. For water heaters that have vertical water connections, due to the differences in the size and dimensions of water heaters, it may not be possible to have the inlet and outlet water piping be turned vertically downward after a fixed horizontal distance of 6 inches away from the connection port. Therefore, for water heaters with vertical connections (opening top or bottom), DOE proposes that the horizontal distance be equal to the distance from the connection port to the edge of the water heater plus 2 inches. Figure III.1, Figure III.2, and Figure III.3 show the three proposed configurations for placement of inlet and outlet water thermocouples for tank-type water heaters. All dimensions shown in the figures and specified in this paragraph are measured from the outer surface of the pipes or water heater jacket (as applicable).

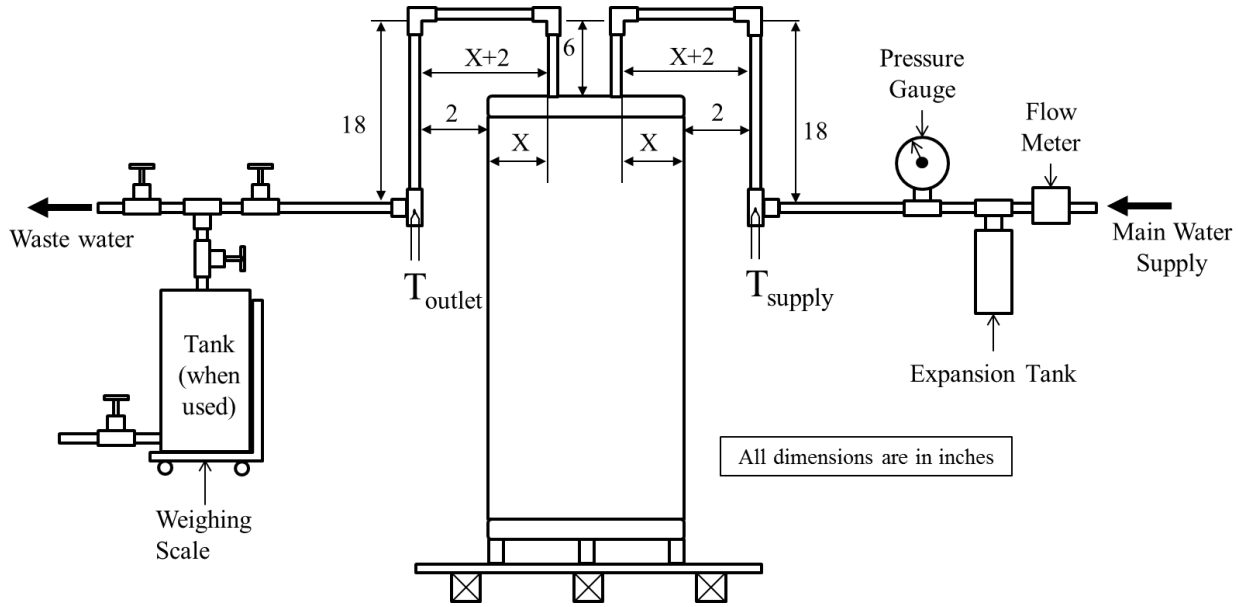

Figure III.1 Proposed test set-up for storage water heaters, storage-type instantaneous water heaters, and unfired hot water storage tanks with vertical (top) connections.

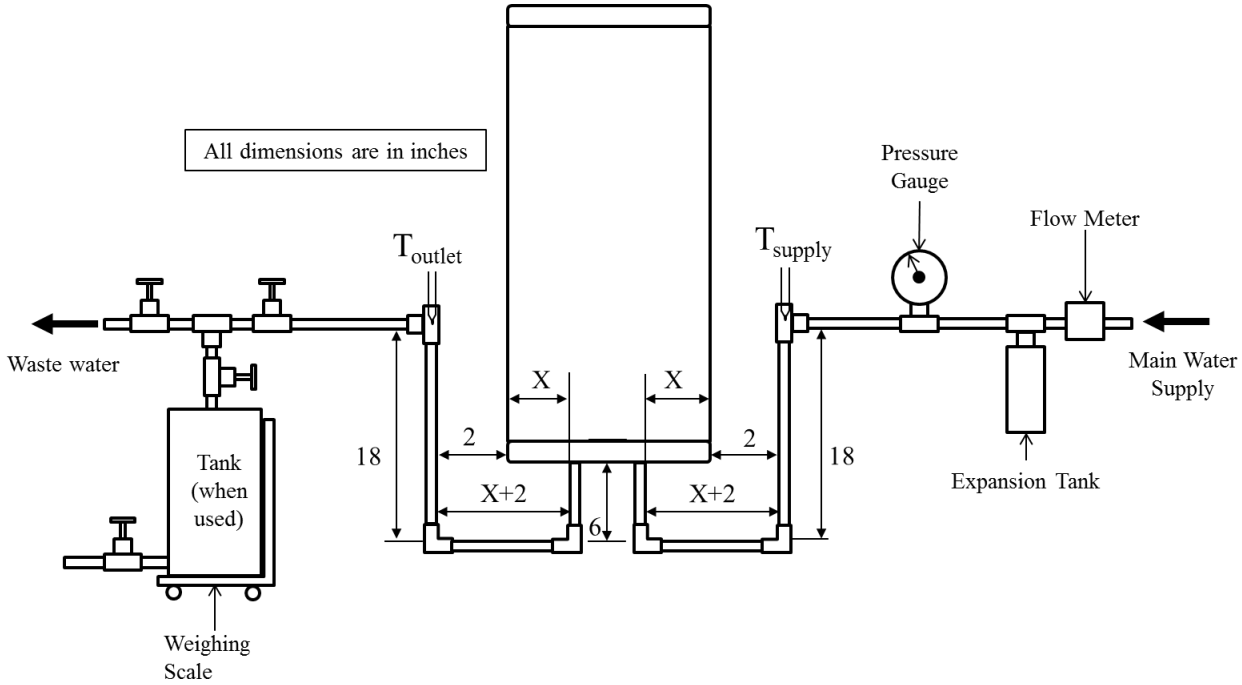

Figure III.2 Proposed test set-up for storage water heaters, storage-type instantaneous water heaters, and unfired hot water storage tanks with vertical (bottom) connections.

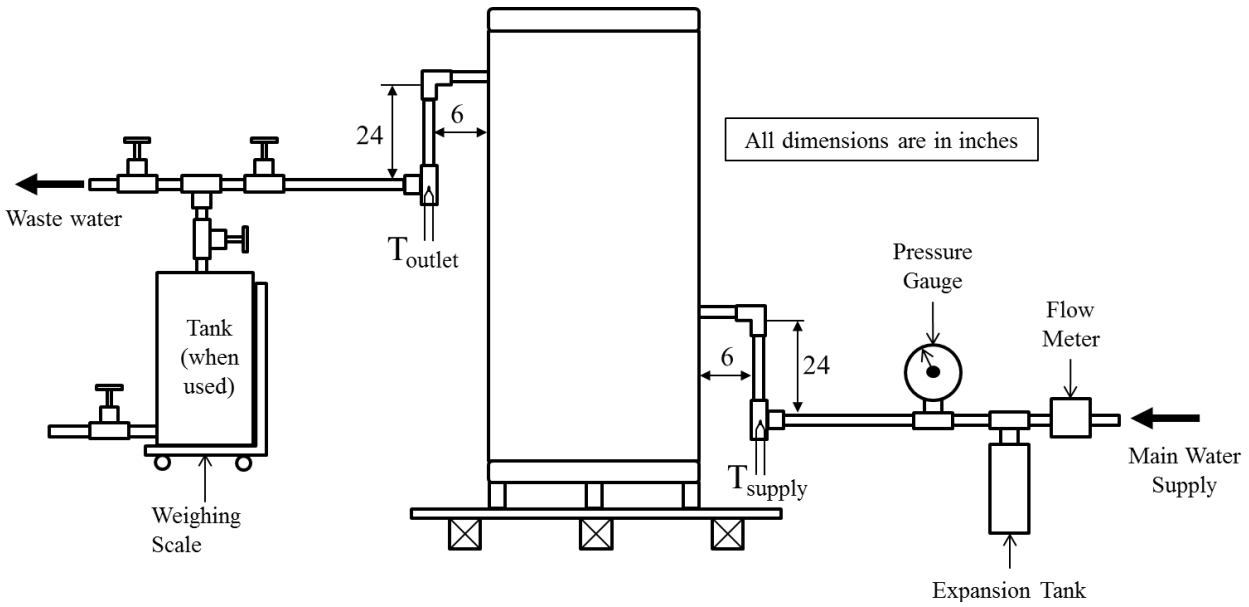

Figure III.3 Proposed test set-up for storage water heaters, storage-type instantaneous water heaters, and unfired hot water storage tanks with horizontal connections.

(7) Increasing the frequency of data collection. To further reduce variability in test results, DOE proposes to decrease the length of the time interval between data collection during the thermal efficiency test from 1 minute to 30 seconds and during the standby loss test from 15 minutes to 30 seconds for all CWH equipment (as applicable). This time interval would apply to the measurement of ambient room temperature, test air temperature, and ambient relative humidity for both the thermal efficiency and standby loss tests (as applicable). For the thermal efficiency test, the 30-second time interval would also apply to the measurement of supply and outlet water temperatures. For the standby loss test the 30-second time interval would apply to the measurement of mean tank temperature for storage and storage-type instantaneous water heaters (storage-type instantaneous water heaters are discussed in section III.F), and to measurement of outlet water temperature for instantaneous water heaters and hot water supply boilers. Additionally, DOE proposes that the fuel (i.e., gas or oil) consumption be measured at 10-minute intervals during the

thermal efficiency test. These increases in frequency of data collection would increase data granularity, thereby providing more information to identify testing irregularities contributing to test result variance. This modification would also allow for more accurate timing of test start and stop, which may lead to more repeatable results.

DOE also considered three other modifications to improve standby loss test repeatability, but ultimately decided against proposing these modifications for the reasons provided. The three additional considered but rejected modifications include:

(1) An increase in the number of temperature sensors measuring internal tank temperature from six to twelve. These sensors would be located at the vertical midpoint of 12 equal volumes of water within the water heater. It was thought that this modification could potentially increase the reliability of the internal tank temperature data and allow better resolution of temperature stratification within the tank. However, based on preliminary test data, DOE observed that increasing the number of sensors had little effect on the outcome of the test and, thus, does not justify the additional burden.

(2) An increase in the number of thermal probes used to measure ambient temperature from one to at least four. These probes could be located at the vertical midpoint of the tank at a perpendicular distance of 24 inches (61 cm) from the surface of the jacket, and in each cardinal direction (i.e., North, South, East, and West). It was thought that this modification could potentially help reduce uncertainty of the true ambient temperature profile around the water heater and the associated effect of this uncertainty on the measured standby loss of tested CWH equipment. However, based on preliminary test data, DOE observed that increasing the number of sensors had little effect on the ambient

temperature readings, and, thus, little impact on the outcome of the test. Consequently, it would not justify the additional burden.

(3) Lengthening the required period for establishing steady-state operation prior to the thermal efficiency test to thirty minutes. DOE's current test procedure references Exhibit G.1 of ANSI Z21.10.3-2011, which requires that the outlet water temperature be established as constant prior to conducting the thermal efficiency test, as determined by no variation in excess of 2 °F over a 3-minute period. For some equipment, a 3-minute period may not be long enough to establish steady-state operation of gas-fired or oil-fired CWH equipment, and a water heater could conceivably exhibit no variation in excess of 2 °F over a 3-minute period before establishing steady-state operation. Additionally, DOE notes that the current test procedure does not impose requirements for maximum variation in inlet water temperature or water flow rate during this period for verifying steady-state operation. Thus, DOE believes that extending the period for determining steady-state operation could improve test method repeatability, and DOE is seeking information and data regarding such a change. DOE notes that for commercial packaged boilers, which are similar equipment to some classes of CWH equipment, AHRI 1500-2015 specifies a 30-minute warm-up period for determining steady-state operation has been achieved.

Issue 3: DOE requests comments and data on its proposed changes to improve the repeatability of the thermal efficiency and standby loss test procedures for certain commercial water heating equipment. Specifically, DOE requests comment on its proposed requirements for ambient relative humidity. DOE does not propose this requirement for testing of electric water

heaters, and seeks feedback on whether including such a requirement would improve the repeatability of the standby loss test for electric water heaters. DOE is also seeking comments regarding any additional changes that would improve the repeatability of the thermal efficiency and standby loss tests.

Issue 4: DOE requests comment on the changes to improve test repeatability for its test procedures for certain CWH equipment that were identified but not proposed in this NOPR. If comments suggest that DOE should implement these changes, then DOE will evaluate whether it can adopt those changes in the final rule or must engage in further rulemaking. Particularly, DOE requests data showing what duration for the steady-state verification period would ensure steady-state operation is reached for gas-fired and oil-fired CWH equipment prior to the thermal efficiency test. DOE also seeks data that suggest suitable tolerances for water temperature and flow rate for this steady-state verification period. Additionally, DOE seeks comment on whether different requirements for establishing steady-state operation are warranted for each equipment class of CWH equipment.

C. Test Method for Unfired Hot Water Storage Tanks

EPCA defines an "unfired hot water storage tank" (UFHWST) as a tank used to store water that is heated externally. (42 U.S.C. 6311(12)(C)) The current Federal standard for this equipment type requires a minimum thermal insulation (R-value) of 12.5. 10 CFR 431.110. DOE defines "R-value" as the thermal resistance of insulating material as determined based on ASTM Standard Test Method C177-97 or ASTM Standard Test Method C518-91 and expressed in $°F \cdot ft^2 \cdot h/Btu$. 10 CFR 431.102. In section III.A.3 of this rulemaking, DOE proposes to update

references to these standards in its definition for "R-value" by incorporating by reference ASTM C177-13 and ASTM C518-10.

DOE is aware that some manufacturers ship UFHWSTs without insulation, and that uninsulated UFHWSTs may or may not then be insulated on-site. In this rulemaking, DOE makes clear that UFHWSTs shipped without insulation are not compliant with the Federal R-value standard. All UFHWSTs must either be shipped insulated to the R-value standard or shipped together with insulation meeting the R-value standard. Manufacturers of UFHWSTs must certify that the insulation meets the R-value standard prescribed in 10 CFR 431.110, and this certification must be based on testing according to the methods prescribed in the R-value definition. A UFHWST manufacturer may demonstrate compliance with the insulation requirements either by conducting testing itself or by using test data from the insulation material producer. Further, manufacturers of UFHWSTs are responsible for retaining records of the underlying test data used for certification in accordance with current maintenance of records requirements set forth at 10 CFR 429.71.

Because DOE includes ASTM test methods for measuring R-value in its definition of "R-value," DOE does not currently specify a test procedure for measuring energy efficiency of UFHWSTs in 10 CFR 431.106. In the February 2014 RFI, DOE requested comment on whether the R-value is an adequate energy efficiency descriptor for UFHWSTs. DOE also requested comment on the potential for replacing R-value with standby loss, or another metric, as the energy efficiency descriptor for UFHWSTs, and how to establish a standby loss test or other test for this equipment if such a metric is appropriate. 79 FR 10999, 11002 (Feb. 27, 2014).

A. O. Smith, AHRI, and Rheem commented that there is no need for a test procedure to measure the R-value of the insulation on UFHWSTs. (A. O. Smith, No. 7 at pp. 1-2; AHRI, No. 2 at pp. 2-3; Rheem, No. 3 at pp. 1-2) AHRI also commented that the R-value requirement is in no way a measurement of the "efficiency" of an unfired storage tank, and that ASHRAE deliberately did not include a thermal efficiency or standby loss requirement for this equipment in ASHRAE Standard 90.1. (AHRI, No. 2 at pp. 2-3) Bradford White and HTP support the current requirement of a minimum insulation R-value, and Bradford White estimated that replacing the R-value metric with a metric requiring an efficiency test would require 3 days of testing per model. (Bradford White, No. 8 at p. 1; HTP, No. 5 at p. 2) AHRI, HTP, and Rheem also expressed support for the current two ASTM test methods (C177-97 and C518-91) for testing the R-value of insulation for UFHWSTs. (AHRI, No. 2 at pp. 2-3; HTP, No. 5 at p. 2; Rheem, No. 3 at pp. 1-2)

Joint Advocates noted that the two ASTM test methods are intended for flat samples, while UFHWSTs are generally pressure vessels with curved surfaces. (Joint Advocates, No. 4 at p. 2) Joint Advocates recommended replacing the present R-value requirement for UFHWSTs with a standby loss test similar to the test used for electric and fuel-fired commercial water heaters because the current R-value requirement does not ensure that all surfaces of the tank are adequately insulated, nor does it encourage other methods to reduce heat loss, such as anti-siphon connections and/or eliminating thermal bridges. Joint Advocates also recommended that for any units with legitimate needs for field insulation of UFWHSTs, DOE could either allow for a waiver or establish a separate class of uninsulated UFHWSTs. (Joint Advocates, No. 4 at p. 2)

A.O. Smith and AHRI also pointed out that there exists a group of UFHWSTs that are larger than standard volume models and are often built to order. (A.O. Smith, No. 7 at p. 2; AHRI, No. 2 at pp. 2-3) A.O. Smith and AHRI stated that these units are often shipped without insulation and subsequently field-insulated due to shipping and installation considerations that make it impractical to insulate at the site of manufacture. (A.O. Smith, No. 7 at p. 2; AHRI No. 2 at pp. 2-3)

After considering these comments, DOE has tentatively determined that a measurement of energy efficiency of UFHWSTs is necessary to more fully comply with the requirements of 42 U.S.C. 6314(a)(2)-(3), and proposes a standby loss metric and test method to replace the current R-value requirement. Although DOE recognizes that requiring use of a standby loss test will increase test burden for manufacturers, DOE has tentatively concluded that the benefits of such a metric would outweigh this additional burden. Primarily, DOE agrees with Joint Advocates that a standby loss metric would encourage and credit energy-saving technologies that are not measured by the R-value of the insulation and ensure that all surfaces are adequately insulated. As a result, DOE proposes to establish a standby loss test method for UFHWSTs that monitors the decrease in tank temperature from a set temperature. In addition, DOE proposes to amend the definition of "standby loss" at 10 CFR 431.102 to include unfired hot water storage tanks.

Regarding the points from AHRI, A. O. Smith, and Joint Advocates about UFHWSTs that are shipped without insulation and subsequently field-insulated, DOE reiterates that all UFHWSTs must have a minimum thermal insulation R-value of 12.5 when they are shipped

from the manufacturer. Any units shipped without a minimum thermal insulation of R-12.5 and then insulated on-site would not be compliant with DOE's current regulations.

To determine the standby loss of an UFHWST, the storage capacity of the tank must first be determined. Section 5.27 of ANSI Z21.10.3-2015 includes a method for measuring the storage capacity, and it states that this method is applicable to water heaters including storage vessels. DOE examined this method and found no reason why it would be inapplicable to UFHWSTs. Therefore, DOE proposes to use the test method described in section 5.27 of ANSI Z21.10.3-2015 to measure the storage capacity of UFHWSTs. DOE includes a procedure for determining storage volume in its proposed test procedure for UFHWSTs that has only clarifying differences from the method presented in section 5.27 of ANSI Z21.10.3-2015. DOE's proposed procedure for determining storage volume is discussed in further detail in section III.G.

Next, DOE considered three possible test methods to determine the standby loss coefficient and hourly standby losses of an UFHWST. The first method considered -- and the one that DOE proposes as the test method for UFHWSTs -- is based on a method for assessing the energy efficiency of indirect water heaters, which was originally developed by the GAMA,[10] and set forth in Testing Standard IWH-TS-1, "Method to Determine Performance of Indirect-Fired Water Heaters" (March 2003 edition).[11] Under this procedure, the tank is set up as would normally be done in the field, with potable water inlet and outlet piping and supply and return piping connected to an external heat source. This procedure specifies bringing the water in the

[10] The Air-Conditioning and Refrigeration Institute (ARI) and GAMA merged to become AHRI on January 1, 2008.
[11] Available at: http://www.ahrinet.org/App_Content/ahri/files/standards%20pdfs/Indirect-Fired%20Water%20Heater%20Testing%20Standard03.pdf (last accessed February 12, 2015)

tank to a mean temperature of 140 °F by the external heat source, and then monitoring the stored water temperature while the heat source is inactive and the water temperature inside the tank decreases. A linear fit is applied to temperature data as the mean tank temperature drops from 137 °F to 133 °F to yield a temperature decay term with units of °F/h. DOE proposes to use this test method as the basis of a test method to determine the standby loss of UFHWSTs but with several modifications. DOE has tentatively concluded that the use of Testing Standard IWH-TS-1 would sufficiently capture the heat loss of UFHWSTs and reduce burden to manufacturers relative to alternative methods, because it is already an industry-accepted procedure that is used in AHRI's certification program for indirect water heaters.

As noted in this preamble, DOE proposes several modifications to Testing Standard IWH-TS-1 to be included in DOE's proposed test procedure for standby loss of UFHWSTs. First, because the nominal tank temperature for determining standby loss for commercial storage water heaters is 140 °F, DOE proposes to calculate standby loss of UFHWSTs using temperature data collected as the mean tank temperature drops from 142 °F to 138 °F instead of 137 °F to 133 °F. To do so, DOE proposes that the tank be filled with water that is heated sufficiently to achieve a mean tank temperature of 145 °F and then be allowed to decrease from that point. Consequently, DOE also proposes to update the water density and specific heat capacity constants used in calculation of standby loss to 8.205 lb/gallon and 0.999 Btu/°F·lb respectively, to correspond to the mid-point of DOE's proposed temperature range (140 °F), instead of the mid-point of the temperature range specified in Testing Standard IWH-TS-1 (135 °F). However, DOE notes that the value for specific heat capacity of water does not change as the temperature

increases from 135 °F to 140 °F, with the number of significant figures specified in Testing Standard IWH-TS-1.

DOE also proposes to adopt the same ambient room temperature requirement for all CWH equipment that is discussed in section III.B. Specifically, DOE proposes that the ambient room temperature must be maintained at 75 °F ± 5 °F during the test (as measured at each 30-second interval), and the measured room temperature must not vary by more than ± 2.0 °F from the average ambient room temperature during the test. While Testing Standard IWH-TS-1 specifies an ambient room temperature of 70 °F, DOE notes that many manufacturers of UFHWSTs also manufacture storage water heaters. Therefore, DOE expects that manufacturer burden would be reduced if storage water heaters and UFHWSTs can be tested in the same test room, and DOE's proposal is consistent with that objective. Additionally, DOE proposes a requirement for maximum air draft in section III.B that applies to the soak-in period and standby loss test for UFHWSTs. Similar to ambient room temperature, DOE expects that aligning this requirement with that for other classes of CWH equipment will reduce testing burden for CWH manufacturers. DOE also proposes a requirement for a soak-in period to be conducted prior to beginning the standby loss test for UFHWSTs. In this soak-in period, the tank must sit without any draws taking place for at least 12 hours after being filled with water such that a mean tank temperature of 145 °F ± 5 °F is achieved. After completion of the soak-in period, DOE would require that the UFHWST be filled again such that a mean tank temperature of 145 °F ± 5 °F is achieved, because the stored water temperature would decrease during the soak-in period. Additionally, DOE proposes requirements for piping insulation and water supply similar to those for other classes of CWH equipment included in Annex E.1 of ANSI Z21.10.3-2015.

DOE also proposes to collect temperature data at intervals of 30 seconds during this test, as opposed to the 15-minute intervals specified by the IWH-TS-1 test method. DOE has determined that a higher number of data points will improve the accuracy of the least-squares regression and that, given the data storage capacity of modern data acquisition equipment, the higher frequency of data collection will pose only a negligible additional burden upon laboratories, as compared to the current 15-minute data collection interval. DOE also proposes to convert the decay rate metric to the standby loss metric currently applied to commercial storage water heaters, which has units of Btu/h.

DOE also considered two other approaches to determine the standby loss for UFHWSTs and is presenting these alternatives as part of this NOPR for comment on their merits compared to the proposed method. The first alternative is similar to the method proposed, but uses a different condition to end the standby loss test. Specifically, under this approach, the test would end 24 hours after the beginning of the test, instead of after the mean tank temperature reaches a specified temperature. However, the use of such a test ending condition would result in different final water temperatures for units with different rates of heat loss. This variation in final water temperature would impart an undesirable benefit to UFHWSTs that lose heat more quickly, because the rate of heat transfer from water to the surrounding air decreases as the corresponding temperature difference decreases. Additionally, DOE believes that a change in test ending condition to a 24-hour time limit may result in unnecessary test burden for manufacturers, as it would likely extend the duration of the test. In light of the potential downsides to this alternative, DOE has tentatively concluded that the test method proposed in this document (based

on the industry-accepted IWH-TS-1 test method) would sufficiently capture the rate of heat loss from the tank while potentially allowing for a shorter test time.

DOE also considered a second alternative test method that would maintain the set point of the hot water within the UFHWST, by connecting an UFHWST to an external heat source (i.e., a water heater or boiler) that would replace water in the tank that has cooled down with water that has been heated by the external source. Circulation from the external heat source to the water heater would be controlled based on the internal tank temperature. The amount of water circulated into the UFHWST from the external source and the temperature of supply water and return water would be monitored during reheat cycles to determine the amount of energy supplied to the tank. This test would start one hour after a reheat cycle and would progress until one hour after completion of the first reheat cycle after 24 hours have elapsed since the start of the test. Calculation of standby loss would include the change in stored energy within the UFHWST, as well as energy supplied to the UFHWST by the external heat source. While this test method would more closely align with DOE's standby loss test procedures for electric and fuel-fired CWH equipment and be more representative of field use of UFHWSTs, DOE has tentatively concluded that this method would be overly burdensome to manufacturers and could lead to increased variability in test results. Use of other CWH equipment to heat water being supplied to the UFHWST could lead to variability based on variation in the equipment and piping used for testing. Based on preliminary test data, DOE observed similar results for a method that uses circulation with an external heat source and a method that does not; therefore, DOE has tentatively concluded that a method using circulation with an external heat source

would not provide a more accurate result that would be commensurate with the additional testing burden of such an approach.

Issue 5: DOE requests comment on the proposed test procedure to determine the standby loss for UFHWSTs, and on whether any other methods, including those detailed in this NOPR, would lead to a better test. Specifically, DOE solicits feedback on whether the proposed test would be long enough to determine an accurate standby loss rating, whether the use of a linear approximation of the temperature decay is sufficient to estimate the standby loss, whether running the test by simply letting the temperature decay (rather than providing external heat to bring the temperature of the water back to operational temperature) is appropriate, and whether the adoption of test conditions (i.e., ambient room temperature, maximum air draft, water temperature) similar to that of other classes of CWH equipment is appropriate. DOE also seeks comment on whether any of its identified alternatives could be modified to improve their repeatability and to decrease test burden, thereby supporting further consideration.

D. Procedure for Setting the Tank Thermostat for Storage and Storage-Type Instantaneous Water Heaters

DOE's test method for measuring the energy efficiency of CWH equipment currently requires that the thermostat be set to achieve specific conditions for the mean tank temperature before the test may begin. In particular, section g of Exhibit G.1 of ANSI Z21.10.3-2011 (which is currently incorporated by reference into the DOE test procedure) requires that before starting testing, the thermostat setting must be adjusted such that, when starting with the water in the system at 70 °F ± 2 °F, the maximum mean tank temperature will be 140 °F ± 5 °F after the

thermostat reduces the gas supply to a minimum. DOE understands that some units may have difficulty achieving the required mean tank temperature condition, and in the February 2014 RFI DOE requested feedback on potential test procedure amendments to address this issue. 79 FR 10999, 11003 (Feb. 27, 2014).

In response to the February 2014 RFI, the four manufacturers among the interested parties (A. O. Smith, Bradford White, HTP, and Rheem), as well as AHRI, expressed support for changing the set point conditions to require monitoring the outlet water temperature rather than the mean tank temperature. (Bradford White, No. 8 at p. 1; Rheem, No. 3 at p. 2; HTP, No. 5 at p. 2; A. O. Smith, No. 7 at p. 2; AHRI, No. 2 at p. 4) A. O. Smith, Rheem, and AHRI expressed support for maintaining the set point condition at 140 °F ± 5 °F for the outlet water temperature. (A. O. Smith, No. 7 at p. 2; Rheem, No. 3 at p. 2; AHRI, No. 2 at p. 4) A. O. Smith stated that certain designs of CWH equipment cannot reach a mean tank temperature of 140 °F ± 5 °F, including down-fired, condensing equipment with reduced firing rates, and solar or other renewable source equipment. (A. O. Smith, No. 7 at p. 2) DOE received no comments opposing a potential change from setting the thermostat based on the mean tank temperature to setting the thermostat based on the temperature of the delivered water.

After carefully considering these comments, DOE proposes to modify the thermal efficiency and standby loss test procedures for gas-fired and oil-fired storage water heaters and storage-type instantaneous water heaters to require that before starting testing, the thermostat setting be adjusted such that, when starting with the water in the system at 70 ± 2 °F, the maximum outlet water temperature will be 140 °F ± 5 °F after the thermostat reduces the gas

supply to a minimum. DOE has tentatively concluded that changing from a mean tank temperature requirement to an outlet temperature requirement would better accommodate designs of gas-fired and oil-fired water heaters that are not designed to have high mean tank temperatures (e.g., condensing water heaters) or that rely upon stratification.

DOE does not propose changing the mean tank temperature requirement to an outlet water temperature requirement for electric storage water heaters because of complications with setting tank thermostats. Electric storage water heaters have multiple heating elements and a thermostat corresponding to each element, and each thermostat needs to be set prior to beginning the standby loss test. Therefore, DOE reasons that electric storage water heaters, which vary in configuration and number of heating elements, are not well-suited to an outlet water temperature requirement because it is unclear how the lower thermostats would be set to achieve a designated outlet water temperature. A consistent, reproducible process for setting the thermostats is essential to having a repeatable test. Therefore, DOE proposes to maintain a mean tank temperature requirement for the standby loss test for electric storage water heaters. However, DOE proposes to clarify its language specifying the method for setting thermostats in an electric storage water heater with multiple thermostats. Specifically, DOE proposes to clarify that the thermostats are to be set in immediate succession, starting from the topmost thermostat. DOE also proposes to clarify that when setting each thermostat, the mean tank temperature is calculated using only temperature readings measured at locations higher in the tank than the heating element corresponding to the thermostat being set, with the exception of the bottommost thermostat. Finally, DOE proposes to clarify that all thermostats below the thermostat being tested must be turned off so that no elements below the thermostat being tested are in operation.

Issue 6: DOE seeks comment on its proposed change to its requirements for setting the tank thermostat in the thermal efficiency and standby loss test procedures for gas-fired and oil-fired storage and storage-type instantaneous water heaters from measurement of mean tank temperature to measurement of outlet water temperature.

Issue 7: DOE seeks comment on its tentative decision to maintain a mean tank temperature requirement for the standby loss test for electric storage water heaters. DOE also requests comment on its clarifying language for setting tank thermostats for electric storage water heaters with multiple thermostats.

E. Clarifications to the Thermal Efficiency and Standby Loss Test Procedures

The calculation of thermal efficiency included in the current DOE test procedure for gas-fired and oil-fired CWH equipment at 10 CFR 431.106 (which incorporates the method used in Exhibit G.1 of ANSI Z21.10.3-2011) does not consider change in internal stored energy of the stored water.[12] In the February 2014 RFI, DOE sought public comment on whether it is necessary to account for the potential variation in stored thermal energy inside the water heater during the course of the test, and specifically whether there is a need to account for losses in the internal stored energy in the thermal efficiency calculation. 79 FR 10999, 11003 (Feb. 27, 2014). In addition, DOE sought feedback on whether there is need for clarification to ensure that

[12] The thermal efficiency test procedure in Exhibit G.1. of ANSI Z21.10.3-2011 is a steady-state procedure where the supply water temperature is maintained at 70 °F ± 2 °F, outlet water temperature is maintained at 70 °F ± 2 °F above the supply water temperature, and the flow rate is adjusted to a constant value that can maintain these temperatures throughout the duration of the test. Because the supply and outlet water temperatures and the water flow rate are not varied while taking the measurements to calculate the thermal efficiency, rate of change of stored energy in the water heater would be zero.

the water flow rate is adjusted so that the burner is fired at a constant firing rate or whether cycling of the burner is allowed. Id.

In response, DOE received several comments from interested parties and stakeholders. AHRI commented that no change is required to the test procedure to address this issue. According to AHRI, the intent of the test method is that the burner be operated at a continuous, full-input firing rate, and once steady state is achieved, there would not be any issue with regards to potential changes in stored heat within the water heater. (AHRI, No. 2 at p. 4) Rheem deferred to AHRI's comments of not requiring any change in the thermal efficiency test method. (Rheem, No. 3 at p. 2) Bradford White, HTP, and A. O. Smith also commented on this issue. Bradford White did not see any merit in modifying the test procedure to account for variation in thermal energy stored in the tank. As a possible clarification, Bradford White suggested adding a sentence stating that, "flow rate must achieve continuous full rate burner operation at the required stable outlet water temperature." According to Bradford White, stored energy would only be a significant consideration if the test conditions are not allowed to stabilize sufficiently or if the conditions are not controlled tightly. Bradford White recommended additional investigation of any modification that is proposed if DOE decides to amend the test procedure to account for stored energy changes. (Bradford White, No. 8 at pp. 1-2) A. O. Smith commented that the current test procedure for determining thermal efficiency has been used for a very long time without any confusion, and accordingly, A. O. Smith did not recommend any changes in the current test procedure. (A. O. Smith, No. 7 at p. 2) HTP commented that units are commonly pre-conditioned before the test, and recommended requiring products be pre-conditioned as part of the DOE test method. Further, HTP asserted that if tanks are pre-conditioned, it would not

expect any additional accuracy achieved by accounting for the difference in energy maintained within the storage tank during the test. (HTP, No. 5 at p. 3) Joint Advocates encouraged any changes that would minimize systematic errors if the current test procedure is insufficiently specific and if an agreement can be reached on a reasonable method whose cost is commensurate to the value of the change. (Joint Advocates, No. 4 at p. 2)

DOE considered all comments received from interested parties in response to this issue. Based on the comments received, DOE has tentatively decided not to implement any changes in the current thermal efficiency test methods or calculations for CWH equipment to account for changes in thermal energy stored in the water heater during the course of the 30-minute test. However, DOE proposes to clarify the requirements for maintaining steady-state operation throughout the thermal efficiency test. Specifically, DOE proposes to clarify that no settings on the water heater may be changed during the course of the thermal efficiency test, once steady-state operation is achieved, as determined by no variation of outlet water temperature in excess of 2 °F over a 3-minute period. This includes setting the flow rate during testing such that the heater operates at full firing rate (i.e., no modulation or cut-outs) for the entire duration of the test. Although the current test method is clear in requiring the test conditions to reach steady state prior to starting the test, there could be some confusion on whether these conditions are required to be maintained for the entire duration of the test. DOE proposes to add a statement to clarify steady-state operation during the thermal efficiency testThe proposed clarifying statement specifies that the test entity must maintain the outlet water temperature at 70 °F ± 2 °F above the supply water temperature and ensure the burner fires continuously at the full firing rate (i.e., no modulation or cut-outs) for the entire duration of the thermal efficiency test. Further, the

proposed statement clarifies that once steady-state operation is achieved, as determined by no variation of the outlet water temperature in excess of 2 °F over a 3-minute period, no settings on the water heating equipment may be changed until measurements for the thermal efficiency test are finished.

Additionally, DOE proposes to clarify a similar requirement for the standby loss test for CWH equipment other than those meeting DOE's proposed definition for "flow-activated instantaneous water heater." DOE proposes to require that after the first cut-out before beginning the standby loss test, no settings may be changed on the water heating equipment until measurements for the standby loss test are finished.

Issue 8: DOE requests comment on its proposed clarifying statements regarding steady-state operation and manipulation of CWH equipment settings during efficiency tests.

F. Definitions for Certain Consumer Water Heaters and Commercial Water Heating Equipment

1. Consumer Water Heaters

EPCA's definition of water heater specifies input ratings at or below which water heaters are to be classified as consumer water heaters (e.g., 75,000 Btu/h for gas-fired storage water heaters; 12 kW for electric storage water heaters and electric instantaneous water heaters; 210,000 Btu/h for oil-fired instantaneous water heaters). (42 U.S.C. 6291(27)) DOE's regulatory definition of "water heater" restates the definition from the consumer products part of EPCA. (42 U.S.C. 6291(27); 10 CFR 430.2) In addition to adopting EPCA's definition of water heater, DOE had defined a variety of terms that helped specify the test procedure provisions that

applied to specific kinds of water heaters. See, e.g., 10 CFR part 430, subpart B, appendix E, in the 10 CFR parts 200 to 499 edition, revised as of January 1, 2015 (defining, for example, gas instantaneous water heater and electric storage-type water heater). These test procedure definitions included provisions related to water temperature design characteristics and rated storage volume. The standards at 10 CFR 430.32 and the water heater definition at 10 CFR 430.2 did not include any such limitations.

In the July 11, 2014 test procedure final rule, in an effort to consolidate all relevant definitions in 10 CFR 430.2, DOE removed the definitions for specific kinds of consumer water heaters from its test method at appendix E to subpart B of part 430 and added definitions to 10 CFR 430.2 (i.e., "Electric heat pump water heater," "Electric instantaneous water heater," "Electric storage water heater," "Gas-fired heat pump water heater," "Gas-fired instantaneous water heater," "Gas-fired storage water heater," "Oil-fired instantaneous water heater," and "Oil-fired storage water heater"). 79 FR 40542, 40549, 40566-67 (July 11, 2014). These definitions became effective on July 13, 2015, and excluded products with a rated storage capacity greater than 120 gallons and in some cases included limitations with respect to units designed to heat and store water at a thermostatically controlled temperature less than or equal to 180 °F. 79 FR 40542, 40566-67 (July 11, 2014). These changes to the definitions were proposed and finalized after the publication of the April 16, 2010 final rule setting amended standards for consumer water heaters, and they were not effective until after the April 16, 2015 compliance date for those standards. As noted previously, the standards and definition set forth in EPCA do not include any requirement related to the water temperature or storage capacity. Therefore, prior to the effectiveness of July 2014 regulation, any product meeting the definition of a "water heater"

would have been subject to the statutory standards applicable to consumer water heaters, regardless of the water delivery temperature or storage capacity.

DOE now proposes to correct the definitions for specific types of consumer water heaters included at 10 CFR 430.2 by removing from the definitions the specifications related to the water temperature and storage capacity. Thus, a model that would otherwise meet the definition of a consumer water heater does not "become" commercial as the result of the unit's capability of producing water at temperatures above 180°F. More generally, a product that utilizes gas, oil, or electricity to heat potable water for use outside the heater upon demand that does not meet the statutory definition of "water heater" at 42 U.S.C. 6291(27) as implemented by this proposed rule, if adopted, would be a commercial water heater, subject to the standards for such water heaters as set forth in 42 U.S.C. 6313.

Furthermore, DOE notes that, if a manufacturer offers a product that meets the definition of a water heater at 10 CFR 430.2, but cannot be tested by the applicable test procedure, the manufacturer should notify DOE and request a waiver from the applicable test method using the procedures at 10 CFR 430.27. If a waiver were granted, DOE would update its test procedure in the next rulemaking for consumer water heaters. DOE does not anticipate, however, that such a waiver would be needed. The UEF test procedure was developed quite recently and was designed to span the consumer product/commercial equipment boundary; accordingly, DOE expects that all units (irrespective of designed water temperature and/or rated storage capacity) can be tested without difficulty.

In its definitions at 10 CFR 430.2, DOE currently defines the terms "electric heat pump water heater" and "gas-fired heat pump water heater." In its energy conservation standards for consumer water heaters at 10 CFR 430.32(d), DOE does not use the terms "electric heat pump water heater" or "gas-fired heat pump water heater." DOE's Uniform Test Method for Measuring the Energy Consumption of Water Heaters at appendix E to subpart B of part 430 also does not use these terms. Therefore, DOE proposes to remove these terms.

As discussed in the previous paragraphs, DOE proposes to revise the definitions for "Electric instantaneous water heater", "Electric storage water heater", "Gas-fired instantaneous water heater", "Gas-fired storage water heater", "Oil-fired instantaneous water heater", "Oil-fired storage water heater", in its regulations of consumer water heaters at 10 CFR 430.2 as set out in the regulatory text at the end of this document.

Issue 9: DOE requests comment on its proposal to amend the definitions for consumer water heaters codified at 10 CFR 430.2 by removing the water temperature and storage capacity provisions. DOE also requests comment on its proposal to remove the definitions at 10 CFR 430.2 for "electric heat pump water heater" and "gas-fired heat pump water heater."

2. Commercial Water Heating Equipment

DOE currently includes several definitions that include the terms "rated input" or "input rating" in its regulations for CWH equipment at 10 CFR 431.102. These definitions include "hot water supply boiler," "instantaneous water heater," "residential-duty commercial water heater," and "storage water heater." In section III.K of this NOPR, DOE proposes a new definition for

“fuel input rate,” a value to be determined for all gas-fired and oil-fired CWH equipment. Therefore, DOE proposes to replace the terms “rated input” and “input rating” with the term “fuel input rate” for gas-fired and oil-fired CWH equipment in the definitions for CWH equipment at 10 CFR 431.102.

DOE’s current definitions for “storage water heater” and “instantaneous water heater” in its regulations for CWH equipment codified at 10 CFR 431.102 do not include any criteria that exclude units that meet DOE’s current definitions for consumer water heaters, as codified at 10 CFR 430.2. Therefore, DOE proposes to clarify these definitions for commercial water heaters by adding the input capacity criteria that distinguish between consumer and commercial water heaters for each energy source, as specified in EPCA’s definition for consumer water heater. (42 U.S.C. 6291(27)) These proposed changes are consistent with DOE’s proposed changes to its definitions for consumer water heaters, as discussed in section III.F.1.

DOE currently includes the definition for “instantaneous water heater” in its regulations for CWH equipment at 10 CFR 431.102. An instantaneous water heater is a water heater that has an input rating not less than 4,000 Btu/hr per gallon of stored water, and that is industrial equipment, including products meeting this description that are designed to heat water to temperatures of 180 °F or higher.

DOE believes that the last clause of the definition for “instantaneous water heater,” which includes units capable of heating water to temperature at or above 180 °F, does not serve a purpose in the definition. Without this clause, it would be assumed that units with this capability

would be included in the definition because there is no restriction indicating otherwise. Therefore to simplify the definition, DOE proposes to remove this clause from the definition for "instantaneous water heater." Additionally, with DOE's proposed addition of input criteria that distinguish between consumer and commercial water heaters previously discussed in this section, DOE believes that the clause "that is industrial equipment" does not serve to further clarify the scope of units covered by this definition. Therefore, DOE proposes to remove this clause from its definitions for "instantaneous water heater" and "storage water heater," and revises the definitions as set out in the regulatory text at the end of this document.

In its regulations for CWH equipment at 10 CFR 431.102, DOE currently includes a definition for "packaged boiler" that is identical to that included for "commercial packaged boiler" at 10 CFR 431.82. DOE includes this definition for "packaged boiler" at 10 CFR 431.102 because the regulations for CWH equipment also include a definition for "hot water supply boiler," and this definition specifies that a hot water supply boiler is a kind of packaged boiler. To simplify its regulations and reduce repetition, DOE proposes to remove the definition for "packaged boiler" from its regulations for CWH equipment at 10 CFR 431.102. Consequently, in its definition for "hot water supply boiler," DOE proposes to replace the term "packaged boiler" with the term "packaged boiler (as defined in §431.82)."

Issue 10: DOE requests comment on its proposed changes to its definitions for CWH equipment: (1) replacing the terms "rated input" and "input rating" with "fuel input rate" for gas-fired and oil-fired CWH equipment to match DOE's proposed definition for "fuel input rate;" (2) modifying DOE's definitions for "instantaneous water heater" and "storage water heater" by

adding the input criteria that separate consumer water heaters and commercial water heaters and removing several phrases that do not serve to clarify coverage of units under the definitions; and (3) removing the definition of "packaged boiler."

In section III.G, DOE discusses the reasons for a separate test procedure for water heaters and hot water supply boilers that require flow of water for heating water, and proposes a definition for "flow-activated water heater," along with a test procedure for flow-activated water heaters as set out in the regulatory text at the end of this document.

In section III.J, DOE proposes a definition for "commercial heat pump water heater," as well as a test procedure for commercial heat pump water heaters as set out in the regulatory text at the end of this document.

3. Residential-Duty Commercial Water Heaters

As required by AEMTCA, DOE established a uniform efficiency descriptor and accompanying test method for consumer water heaters and certain commercial water heaters in the July 2014 final rule. 79 FR 40542 (July 11, 2014). Specifically, AEMTCA required that the uniform efficiency descriptor and test method apply to all covered water heaters, including both consumer or commercial water heaters, except for certain commercial water heaters that do not have a residential use, can be clearly described, and are effectively rated using the thermal efficiency and standby loss descriptors. (42 U.S.C. 6295(e)(5)(F)) In the July 2014 final rule, DOE established input and volume criteria to distinguish commercial water heaters that do not

have residential applications, based on comments from stakeholders. 79 FR 40542, 40586 (July 11, 2014). However, for four classes of residential-duty commercial water heaters – electric storage water heaters, heat pump water heaters, gas-fired instantaneous water heaters, and oil-fired instantaneous water heaters – the input criteria established to separate residential-duty commercial water heaters and commercial water heaters are identical to those codified at 10 CFR 430.2 that separate consumer water heaters and commercial water heaters. The criteria for these classes are shown in Table III-1. Because these input criteria are identical, by definition, no models can be classified under these four residential-duty equipment classes. Therefore, to eliminate potential confusion, DOE proposes to remove these classes from the definition for "residential-duty commercial water heater" codified at 10 CFR 431.102.

Table III-1 Indicator of Non-Residential Application for Certain Classes of CWH Equipment

Water Heater Class	Indicator of non-residential application
Electric storage	Rated input >12 kW; Rated storage volume >120 gallons
Heat pump with storage	Rated input >12 kW; Rated current >24A at a rated voltage of not greater than 250 V; Rated storage volume >120 gallons
Gas-fired instantaneous	Rated input > 200 kBtu/h; Rated storage volume >2 gallons
Oil-fired instantaneous	Rated input > 210 kBtu/h; Rated storage volume >2 gallons

DOE proposes to revise the definition for "residential-duty commercial water heater" as set out in the regulatory text at the end of this document.

Issue 11: DOE requests comment on its proposal to modify the definition of "residential-duty commercial water heater" by removing from its scope the following classes: electric storage water heaters, heat pump water heaters with storage, gas-fired instantaneous water heaters, and oil-fired instantaneous water heaters.

4. Storage-type Instantaneous Water Heaters

The definitions for "instantaneous water heater" and "hot water supply boiler" set forth in 10 CFR 431.102 include CWH equipment with an input rating of at least 4,000 Btu/h per gallon of stored water. These definitions, therefore, include both instantaneous water heaters and hot water supply boilers without integral storage tanks, as well as instantaneous water heaters with integral storage tanks (but with at least 4,000 Btu/h of input per gallon of stored water). DOE believes these two groups of equipment – water heaters with and without integral storage tanks – are fundamentally different in their construction and application and have different energy losses that need to be accounted for during efficiency testing. DOE has tentatively concluded that

instantaneous water heaters with an integral storage tank ("storage-type instantaneous water heaters") should be tested in a manner similar to commercial storage water heaters. Therefore, DOE proposes to adopt a test method specifically applicable to "storage-type instantaneous water heaters" that is the same as the test method for commercial storage water heaters. DOE proposes to define "storage-type instantaneous water heater" as set out in the regulatory text at the end of this document.

Issue 12: DOE seeks comment on its proposed definition of "storage-type instantaneous water heater."

It is DOE's understanding that storage-type instantaneous water heaters are very similar to storage water heaters, but with a higher ratio of input rating to tank volume. This higher input-volume ratio is achieved with a relatively larger heat exchanger paired with a relatively smaller storage tank. However, through a review of product literature, DOE noted no significant design differences between models in these two proposed equipment classes that warrant separate test procedures for thermal efficiency or standby loss. Therefore, DOE proposes that the proposed test procedures for storage water heaters apply also to storage-type instantaneous water heaters.

G. Standby Loss Test for Flow-Activated Instantaneous Water Heaters

The current Federal standby loss test method for CWH equipment incorporates by reference ANSI Z21.10.3-2011, including Exhibit G.2 which assumes that the water heater would automatically initiate the next firing cycle when the internal water temperature (measured

using the internal tank thermostat) falls below its allowable minimum value. An underlying assumption for the standby loss test is that the ignition of the burner or activation of the electric element is solely dependent on the feedback control signal from the internal tank thermostat. This assumption, although true for most CWH equipment, is not applicable to certain instantaneous water heaters and hot water supply boilers that require continuous water flow through the heat exchanger in order to activate the next firing cycle.

Measuring standby loss for such flow-activated instantaneous water heaters with a storage volume greater than or equal to 10 gallons was raised as an issue by AHRI. (AHRI, No. 2 at pp. 4-5) Specifically, AHRI commented that the current standby loss test is designed for tank-type water heaters and does not address water heaters that can fire only when hot water is being drawn. (AHRI, No. 2 at pp. 4-5) On August 25, 2014, AHRI provided a supplemental comment with a recommended standby loss test method for tube-type instantaneous water heaters having a capacity of 10 gallons or more ("2014 AHRI-recommended test method"), which includes a suggested test method for models that are flow-activated. AHRI also mentioned in its comments that their recommended test method is being considered as an addition to the ANSI Z21.10.3 standard, and was at that time under review by the ANSI Z21/83 committee. (AHRI, No. 10 at p. 1)

DOE considered the comments received from AHRI and reviewed its recommended standby loss test method for tube-type instantaneous water heaters having a capacity of 10 gallons or more. Based on its review, DOE agrees with AHRI's argument that the current standby loss test method as set forth in Exhibit G.2 of ANSI Z21.10.3-2011 (incorporated by

reference in the DOE test procedures) is designed for thermostatically-controlled, tank-type (or storage) water heaters and acknowledges concerns about the applicability to flow-activated water heaters. The current test procedure does not provide any indication of how to test flow-activated instantaneous water heaters that have no means of firing or heating if there is no flow of water through the system. Therefore, DOE has tentatively concluded that a different standby loss test procedure is required for flow-activated instantaneous water heaters. To differentiate units for which the proposed standby loss test procedure discussed in this section will apply, DOE proposes to define "flow-activated instantaneous water heater" as set out in the regulatory text at the end of this document.

Issue 13: DOE requests comment on its proposed definition for "flow-activated instantaneous water heater." Specifically, DOE requests feedback on whether the definition includes all units and designs for which a separate standby loss test procedure is warranted, and whether any units would be included that do not need a test method separate from the current standby loss test procedure for CWH equipment.

DOE notes that the requirement to measure a "mean tank temperature" to calculate the standby loss would also be an issue for all instantaneous water heaters and hot water supply boilers that have a storage capacity of 10 gallons or more and that do not meet DOE's proposed definition of "storage-type instantaneous water heater", because these units do not have an integral tank, and the heat exchanger geometry can make obtaining an accurate reading of the water stored within the heat exchanger difficult to obtain. DOE has addressed this issue both in its proposed test method for flow-activated instantaneous water heaters contained within this

section, and in proposed changes to the current standby loss test procedure for other instantaneous water heaters and hot water supply boilers discussed in section III.I of this NOPR.

To develop a new Federal standby loss test procedure for flow-activated instantaneous water heaters, DOE first reviewed the 2014 AHRI-recommended test method. After its review, DOE identified potential issues and provided AHRI with questions seeking further clarifications on various aspects of their recommended test method related to conduct of the test, duration of test, flow and temperature measurements, and the equations used to calculate standby loss. On August 17, August 18, and December 14, 2015, DOE received separate responses from AHRI members Thermal Solutions Inc., Raypak Inc. and A. O. Smith, respectively.[13] The responses provide answers to all the questions posed by DOE and clarified the intent of the 2014 AHRI-recommended test method.

In November 2015, ANSI published an updated version of the ANSI Z21.10.3 test standard. This updated version, ANSI Z21.10.3-2015, includes Annex E.3, which describes a test method for measuring the standby loss of tube-type instantaneous water heaters having a storage capacity of 10 gallons or more. DOE reviewed this section carefully and found it to be similar to the Annex E.3 included in the 2014 AHRI-recommended test method. The only difference DOE identified between the two versions of Annex E.3 was the referenced section for determining the volume of water contained in the water heater. Specifically, Annex E.3 in the

[13] The response from Thermal Solutions Inc. can be found in the docket for this rulemaking at : http://www.regulations.gov/#!documentDetail;D=EERE-2014-BT-TP-0008-0011
The response from Raypak Inc. can be found at: http://www.regulations.gov/#!documentDetail;D=EERE-2014-BT-TP-0008-0012.
The responses from A.O. Smith can be found at: http://www.regulations.gov/#!documentDetail;D=EERE-2014-BT-TP-0008-0014.

2014 AHRI-recommended test method references to section 5.27 of ANSI Z21.10.3 for determining the water contained in the water heater, while Annex E.3 of ANSI Z21.10.3-2015 references section 5.28 of ANSI Z21.10.3-2015, "Capacities of tube type water heaters." After carefully comparing the 2014 AHRI-recommended test method with Annex E.3 of ANSI Z21.10.3-2015, DOE believes that ANSI Z21.10.3-2015 renumbered section 5.27 as 5.28, and that AHRI's reference to section 5.27 was referring to the section titled "Capacities of tube type water heaters." Therefore, DOE has tentatively concluded that there are no substantive differences between the 2014 AHRI-recommended test method and the test method contained in Annex E.3 of ANSI Z21.10.3-2015.

As previously discussed, prior to the publication of ANSI Z21.10.3-2015, DOE posed several questions and sought clarifications from AHRI on various aspects of the 2014 AHRI-recommended test method. Thermal Solutions Inc., Raypak Inc., and A.O. Smith provided responses to DOE's questions. The major issues on which DOE sought clarification, along with the manufacturer responses, are described in the following paragraphs.

First, DOE sought clarification as to whether the 2014 AHRI-recommended test method applies to all tube-type (thermostatically-activated and flow-activated) water heaters with a storage capacity of 10 gallons or more, or only to flow-activated instantaneous water heaters. DOE notes that AHRI's comments indicate that the test procedure is exclusively for flow-activated instantaneous water heaters. However, the title of the 2014 AHRI-recommended test method indicates that the test applies to all "tube-type" instantaneous water heaters. (AHRI, No. 10 at p.4) Judging by the title and the language used in the test method, DOE initially

interpreted the test method as divided into two distinct parts: (1) the first part pertaining to tube-type instantaneous water heaters that are thermostatically-activated and are not flow-activated[14]; and (2) the second part pertaining to water heaters that will neither initiate, nor cause actions that will initiate, burner operation based on a thermostatic control. DOE interpreted this second part of the test procedure to be applicable to flow-activated instantaneous water heaters that are not thermostatically-activated. However, the responses from Raypak and Thermal Solutions indicate that the entire 2014 AHRI-recommended test method (Annex E.3) is exclusively meant for flow-activated instantaneous water heaters. Raypak and Thermal Solutions stated that the first part of the test method is meant for water heaters that are flow-activated but may have some other form of energy-consuming function or water circulation during the conduct of the standby loss test. (Thermal Solutions, No. 11 at p 1; Raypak, No. 12 at p. 2) A.O. Smith also stated that DOE's interpretation was incorrect, and that the 2014 AHRI-recommended test method is divided into two parts to cover different designs of instantaneous water heaters whose tube type heat exchangers happen to store ten gallons or more. A. O. Smith further stated that the first part of the test method addresses instantaneous water heaters whose burners may activate by some specialty feature (e.g., frost control) and the second part of the test method addresses more common designs that are installed with a remote storage tank and a thermostat that activates the water pump, which then activates the burners. A. O. Smith also stated that the first part of the 2014 AHRI-recommended test method does not address thermostatically-activated models. (A. O. Smith No. 14 at p. 1)

[14] The first equation for standby loss calculated in the first part of 2014 AHRI-recommended test method includes a term for fuel consumed. The test procedure also states that the second equation is for units for which the main burner(s) do not cycle back on during the course of the test. Based on this language, DOE interpreted the first part (that includes the first and second equation) to be for units that are thermostatically-activated and not flow-activated.

Thermal Solutions and Raypak did not comment on DOE's interpretation of the second part of the 2014 AHRI-recommended test method. However, judging by the response from A. O. Smith regarding the second part and the responses from A. O. Smith, Thermal Solutions, and Raypak regarding the first part, DOE infers that the second part of the test procedure is meant for flow-activated instantaneous water heaters that do not have any form of energy consumption or water circulation during the conduct of the standby loss test. (Thermal Solutions, No. 11 at p 1; Raypak, No. 12 at p. 2; A. O. Smith No. 14 at p. 1)

DOE also sought clarifications on the equations used to calculate the standby loss in both parts of the 2014 AHRI-recommended test method. In the first equation of the 2014 AHRI-recommended test method, DOE noticed an inconsistency in units of measurement. (AHRI, No. 10 at p. 5) When calculated, the first term of this equation has the units Btu/h, while the second term has the units 1/h. Mathematically, a subtraction or addition operation cannot be applied over two numbers that have different units of measurement. In their responses, the manufacturers also acknowledged the issues with regards to the equations for calculating standby loss and stated that AHRI has worked on a corrected derivation for the equations of this test procedure. (Thermal Solutions, No. 11 at p 3; Raypak, No. 12 at p. 4; A. O. Smith No. 14 at p. 3) DOE notes that later versions of the AHRI-recommended test methods (discussed later in this section) rectify this error in the first equation of the 2014 AHRI-recommended test method. However, the later versions of the AHRI-recommended test methods convert standby loss units from percent-per-hour of the heat content of the stored water to Btu-per-hour based on a temperature difference of the average value of the outlet water temperature minus the average value of the ambient temperature measured during the course of the test. This method of

calculation does not match with the standby loss definition that is currently set forth in 10 CFR 431.102, which is based on a temperature difference of 70 °F between the stored water and the ambient air. Therefore, DOE has tentatively decided not to consider this equation for the proposed standby loss test procedure for flow-activated instantaneous water heaters.

In the second equation of the 2014 AHRI-recommended test method, DOE sought to understand the rationale for choosing a temperature difference term that is equal to the difference between the outlet water temperature and supply water temperature to calculate the thermal energy lost during the test. (AHRI, No. 10 at p. 5) In the third equation of the 2014 AHRI-recommended test method, DOE sought to understand the rationale for assuming a constant temperature difference of 70 °F between the supply water and the outlet water temperature. Further, the third equation appeared to assume that the outlet water in the water heater will cool down to the supply water temperature over a span of exactly 24 hours during the conduct of the test. (AHRI, No. 10 at p. 6) On the issue of considering the temperature difference between the outlet water temperature and supply water temperature to calculate the loss in thermal energy during the test, the manufacturers stated that AHRI has conservatively assumed the temperature of stored water inside the water heater to be equal to the outlet water temperature. The manufacturers stated that the geometry of these water heaters does not allow for the measurement of the mean stored water temperature inside the water heater. As a consequence, the commenters suggested using the outlet water temperature in place of the mean stored water temperature to carry out the standby loss calculations. (Thermal Solutions, No. 11 at pp. 3, 5; Raypak, No. 12 at pp. 4, 6; A. O. Smith No. 14 at pp. 3-5). The manufacturers also stated that they are willing to accept a conservative estimate of the standby loss in order to reduce the

complexity and burden of the test method. (Thermal Solutions, No. 11 at p. 3; Raypak, No. 12 at p. 4; A. O. Smith No. 14 at p. 3-5)

DOE also sought clarification on the duration of the standby loss test. In particular, DOE sought an answer to whether any consideration was given to the possibility that flow-activated water heater burners may not cycle on at any point during the test and instead cool down completely in less than 24 hours. The manufacturers' responses to this question indicated that the suggested test method includes a one-hour test, and it is assumed that all the heat is lost in the heat exchanger. (Thermal Solutions, No. 11 at p 4; Raypak, No. 12 at p. 4; A. O. Smith No. 14 at p. 5)

Another issue that DOE sought clarification on is the method used to measure the storage volume of the water heater. Section 5.27 of ANSI Z21.10.3-2015 (that is the same as section 5.26 of ANSI Z21.10.3-2011, 2013, and 2014), "Capacities of storage vessels," describes a method of test to measure the storage volume of a water heater containing a storage vessel or with an input rating less than 4,000 Btu/h per gallon of water stored. The 2014 AHRI-recommended test method specifies using the methodology described in section 5.27 of ANSI Z21.10.3, that DOE believes corresponds to section 5.28 of ANSI Z21.10.3-2015, "Capacities of tube type water heaters." DOE reviewed section 5.28 of ANSI Z21.10.3-2015 carefully, and noticed that this section does not specify a method for determining the volume of tube-type water heaters; instead, it only states that the volume shall be determined. DOE sought clarifications on the rationale for using the test method described in section 5.28, "Capacities of tube type water heaters" of ANSI Z21.10.3-2015 as opposed to section 5.27, "Capacities of storage vessels" of

ANSI Z21.10.3-2015 (that is the same as section 5.26 of ANSI Z21.10.3-2011, 2013 and 2014). Section 5.26 of ANSI Z21.10.3-2011 is used for measuring the storage volume of all CWH equipment in Exhibit G.2 of ANSI Z21.10.3-2011, which is incorporated by reference in the current Federal standby loss test procedure.

In response to this issue, the manufacturers stated that determining the stored volume using section 5.26 of ANSI Z21.10.3 (which DOE interprets as referring to section 5.26 of ANSI Z21.10.3-2011, 2013, and 2014, "Capacities of storage vessels," which corresponds to section 5.27 of ANSI Z21.10.3-2015) is only required for water heaters that are known to have a stored water capacity greater than or equal to ten gallons and that the test is not required for water heaters with less than ten gallons of storage capacity. The manufacturers' comments indicate that they believe the test method to measure the storage volume is left to the discretion of the certification body. The manufacturers further stated that the test method in section 5.26 may not be a reliable test method for water heaters with small water volumes, manifold coils, and complex geometries. Moreover, they stated that heat exchangers used in the water heaters are hydrostatically tested before the assembly, as required by the American Society of Mechanical Engineers (ASME) and will always have some residual water in the heat exchanger. According to the manufacturers, this residual water will result in inaccurate measurement of the volumetric capacity of the water heater. (Thermal Solutions, No. 11 at pp. 1-2; Raypak, No. 12 at p. 2; A. O. Smith No. 14 at pp. 1-2)

Another issue that DOE noticed with the test procedure in Annex E.3 of ANSI Z21.10.3-2015 is that (similar to the 2014 AHRI-recommended test method) the first part of Annex E.3 of

ANSI Z21.10.3-2015 appears to be for thermostatically-activated units. Annex E.3 of ANSI Z21.10.3-2015 does not appear to be applicable exclusively to flow-activated instantaneous water heaters as is indicated by the manufacturers in their responses and AHRI in the 2014 AHRI-recommended test method. (AHRI, No. 10 at p. 4; Thermal Solutions, No. 11 at pp. 1; Raypak, No. 12 at pp. 1-2; A. O. Smith, No. 14 at p. 1)

On December 2, 2015, AHRI submitted another supplemental comment to the February 2014 RFI that included a revised recommendation for a test method for measuring standby loss for tube-type commercial instantaneous water heaters and hot water supply boilers that contain more than 10 gallons of water ("2015 AHRI-recommended test method"). (AHRI (2015), No. 13, pp.1, 6-8)[15] DOE compared the 2014 AHRI-recommended test method with the 2015 AHRI-recommended test method to identify the differences between the two test methods. In the 2015 AHRI-recommended test method, AHRI updated the equations for calculation of standby loss in its recommended Annex E.3. After reviewing these revised equations, DOE notes that the first equation in Annex E.3 of the 2015 AHRI-recommended test method is the result of converting the current equation for standby loss specified in Exhibit G.2 of ANSI Z21.10.3-2011 (but with the mean tank temperature replaced with the outlet water temperature) from units denominated as percentage-per-hour to units denominated as Btu-per-hour, by multiplying by a term consisting of $k \times V_a \times \Delta T_3/100$.[16] DOE also notes that the second equation provided in the

[15] DOE received two supplemental comments from AHRI in response to the February 2014 RFI on December 2, 2015 and January 11, 2016. Both comments are included in the docket under filing number EERE-2014-BT-TP-0008-0013. To differentiate between the two documents for citations, DOE uses "AHRI (2015)" and "AHRI (2016)" to refer to the comment received on December 2, 2015 and on January 11, 2016, respectively. Both supplemental comments can be found at: http://www.regulations.gov/#!documentDetail;D=EERE-2014-BT-TP-0008-0013.

[16] Annex E.2 of ANSI Z21.10.3-2013 (and 2014) defines 'K' as the nominal specific heat of water that has a value of 8.25 Btu per gallon. This is the same as 'k' that is used by AHRI in their equations in the Annex E.3 of the 2015 and 2016 AHRI-recommended test method. The term Va refers to the measured volume expressed in gallons and

2015 AHRI-recommended test method is identical to the second equation that is provided in the 2014 AHRI-recommended test method and as stated in the test method, is used for water heaters for which the main burner(s) do not cycle on during the course of the test. The final equation in the 2015 AHRI-recommended test method specifies the time for the duration of the test as 24 hours, similar to the 2014 AHRI-recommended test method. However, in the 2015 AHRI-recommended test method, the variables used in the final equation and the variables defined after the equation are not consistent – specifically, the equation contains the term ΔT_4, while the list of variables below the equation includes ΔT_5. The final equation in the 2015 AHRI-recommended test method uses ΔT_4, while the final equation in the 2014 AHRI-recommended test method uses ΔT_5. Other than the differences mentioned in this paragraph, DOE tentatively determined that the 2015 AHRI-recommended test method contains no additional substantive differences from the previously submitted 2014 AHRI-recommended test method. Therefore, other than these differences, all issues that DOE identified with the standby loss test in the 2014 AHRI-recommended test method also apply to the 2015 AHRI-recommended test method.

On January 11, 2016, AHRI submitted a third supplemental comment to the February 2014 RFI that included a further revised recommendation for a test method for measuring standby loss for tube-type commercial instantaneous water heaters and hot water supply boilers that contain more than 10 gallons of water ("2016 AHRI-recommended test method"). (AHRI (2016), No. 13, pp.1, 6-8) After carefully reviewing this submission, DOE tentatively determined that the only difference between the 2015 AHRI-recommended test method and the 2016 AHRI-recommended test method are the temperature differences used in equations for

measured as per section 5.27 of ANSI Z21.10.3-2015 and ΔT_3 refers to the difference between the average value of the outlet water temperature and the average value of the ambient temperature expressed in °F.

calculating standby loss. Specifically, the temperature difference used in the first two equations in Annex E.3 of the 2016 AHRI-recommended test method is ΔT_5, which represents the difference between the final outlet water temperature and the initial outlet water temperature. This differs from the temperature difference terms used in the corresponding standby loss equations in the 2015 AHRI-recommended test method, which are denoted as ΔT_4 and defined as the difference between the average supply water temperature and the outlet temperature. In the final standby loss equation in Annex E.3, the temperature difference used is ΔT_6, which represents 70°F, the difference between the supply and outlet water temperatures, and was previously denoted as ΔT_5 in the corresponding equation in the 2015 AHRI-recommended test method. These changes in temperature difference terms in standby loss equations help to clarify issues with these terms that DOE identified in the 2015 AHRI-recommended test method. However, with the exception of these temperature difference terms, the other issues that DOE identified with the 2014 and 2015 AHRI-recommended test methods also apply to the 2016 AHRI-recommended test method.

DOE has considered the initially submitted 2014 AHRI-recommended test method, the clarifications provided by manufacturers, Annex E.3 of the recently published ANSI Z21.10.3-2015, and the recently submitted 2015 and 2016 AHRI-recommended test methods in developing the proposed standby loss test procedure for flow-activated instantaneous water heaters. DOE agrees with certain aspects of the recommended test methods and the related clarifications; however, DOE tentatively concludes that there are several modifications that need to be made to the 2016 AHRI-recommended test method for it to be used as a Federal standby loss test procedure for flow-activated instantaneous water heaters. As noted previously, the only

difference between the 2016 AHRI-recommended test method and Annex E.3 of ANSI Z21.10.3-2015 is with regards to the first equation in both test methods and, similarly, DOE is not proposing to adopt the test method in Annex E.3 as the Federal test method. Rather, the following paragraphs describe DOE's proposed test method, including differences from both the 2016 AHRI-recommendation and the ANSI Z21.10.3-2015 test method, and the reasons such changes are deemed necessary.

As previously defined in this section, a flow-activated instantaneous water heater will initiate firing or heating only when water is being drawn from the water heater. In Annex E.3 of ANSI Z21.10.3-2015 and the 2016 AHRI-recommended test method, the water heater is kept in standby mode, and no hot water is drawn from the equipment during the standby loss test. Under such conditions, the water heater would not be expected to initiate burner or heating element operation at any point during the course of the test since there is no flow to activate the heat source. As a result, hot water stored in the water heater in standby mode will continuously lose heat to the environment until the water temperature approaches the surrounding ambient air temperature. DOE considers this standby mode operation for flow-activated instantaneous water heaters to be characteristically different from the standby mode operation of thermostatically-activated water heaters, where the main burner or element(s) cycles on when the water temperature drops below the thermostat set point.

The first part of Annex E.3 of ANSI Z21.10.3-2015 and the 2016 AHRI-recommended test method appears to apply to water heaters that may circulate water or initiate some other energy-consuming function when hot water is not being drawn. If a water heater consumes

energy for the purpose of heating water during the standby mode, then such a water heater would not fit the proposed definition of a "flow-activated instantaneous water heater." Such water heaters would instead be covered by the proposed standby loss test method for instantaneous water heaters and hot water supply boilers that are not flow-activated, as discussed in section III.I of this NOPR. However, to account for other types of fuel consumption during standby mode (i.e., other than directly for the purpose of heating water), DOE has retained the fuel consumption terms in the proposed standby loss equation for flow-activated instantaneous water heaters.

The driving temperature difference that causes the constant heat loss to the ambient air from the water heater is the difference between the stored water and the ambient air temperature. This temperature difference must be factored into the standby loss calculations, as included in the 2016 AHRI-recommended test method, instead of the temperature difference between outlet and supply water that is used in Annex E.3 of ANSI Z21.10.3-2015 and the 2015 AHRI-recommended test method. In addition, the current standby loss test procedure that is set forth in Exhibit G.2 of ANSI Z21.10.3-2011 (incorporated by reference into the current DOE test procedure) calculates the standby loss as a percentage per hour of the total heat content of the water heater. In DOE's test procedure for gas-fired and oil-fired CWH equipment as set forth in 10 CFR 431.106, DOE uses this percent-per-hour standby loss value to calculate the standby loss in terms of Btu/h based on the storage volume and a 70 °F temperature difference between the stored water and the ambient air temperature. DOE notes that the 2016 AHRI-recommended test method converts from standby loss in terms of percent-per-hour to standby loss in terms of Btu-per-hour by multiplying by a term that includes ΔT_3, which is defined in Annex E.3 of ANSI

Z21.10.3-2015 as the difference between the outlet water temperature and the average value of the ambient temperature. This is in contrast to: (1) DOE's current test procedure as specified in 10 CFR 431.106, which converts using a fixed 70 °F temperature difference rather than using the measured temperature difference from testing and, (2) the current definition of "standby loss" specified in 10 CFR 431.102 that defines "standby loss" as the average energy required to maintain the stored water temperature, expressed in Btu per hour based on a 70 °F temperature differential between stored water and ambient temperature.

DOE notes that use of a fixed 70 °F temperature difference allows for straightforward conversion of standby loss from one set of units to another, while use of the measured temperature difference requires the availability of data from efficiency testing. DOE sees value in such a straightforward conversion, so that those without access to efficiency test data can still convert between the two values. Additionally, the standby loss test method that is proposed for flow-activated instantaneous water heaters already takes into account the measured temperature difference between the outlet water temperature and the ambient air temperature, making the additional inclusion of this term in the conversion unnecessary. Finally, use of a constant 70 °F temperature difference would make the conversion in this proposed standby loss test procedure consistent with that in DOE's current test procedure at 10 CFR 431.106, and DOE also proposes this method of conversion to standby loss in terms of Btu/h for other classes of gas-fired and oil-fired CWH equipment in appendices A and C to subpart G of 10 CFR part 431. Therefore, DOE proposes to use the same approach of a constant 70 °F temperature difference to calculate the standby loss for gas-fired and oil-fired flow-activated instantaneous water heaters. For electric

flow-activated instantaneous water heaters, DOE proposes to maintain a standby loss metric in terms of a percent-per-hour value.

As discussed in this preamble, the 2016 AHRI-recommended test method specifies setting a time duration of one hour for flow-activated water heaters that would not have any form of energy consumption to maintain the water temperature and that would eventually cool down to ambient temperature. DOE sees merit in setting a maximum time duration to mark the end of the test. However, DOE does not agree with having the time duration as the only criterion for ending the standby loss test. As noted previously, the standby loss test for flow-activated instantaneous water heaters resembles a constant cool down test where the main burner or heating element does not cycle on at any point in the course of the test. For these water heaters, it is very likely that the stored water in the unit cools down to the ambient temperature before 24 hours. In such a scenario, from the time the stored water temperature reaches the ambient temperature to the end of the 24 hours, the water heater will not experience any standby energy loss. However, the standby loss equation provided in the 2016 AHRI-recommended test method assumes that the entire heat loss takes place over a duration of 24 hours. As a result, using the 2016 AHRI-recommended test method, the standby loss value calculated for water heaters that cool down before the 24-hour time period would understate the actual hourly heat loss from the water heater. Based on the 2016 AHRI-recommended test method, two water heaters that have the same storage volume and electricity consumption but different cooling rates as they both cool down to the ambient temperature within 24 hours would have the same standby loss value. DOE has determined that this would lead to an inaccurate comparison of the standby loss between two water heaters that lose heat at different rates. A similar issue would arise if the time duration

were set to one hour or any specific value that might be less than the time it takes some water heater to cool to ambient temperature, because such a time criterion would capture the heat loss to different final water temperatures for different water heaters (i.e., two different water heaters would have different final water temperatures at the end of the set time period). This variation in final water temperature would impart an undesirable benefit to water heaters that lose heat more quickly, because the rate of heat transfer from water to the surrounding air decreases as the corresponding temperature difference decreases.

To avoid these issues and to compare standby loss of different water heaters with a more consistent approach, DOE proposes to use a temperature criterion in addition to a fixed maximum time duration to mark the end of the test. DOE proposes that the standby loss test be stopped at the first instance that the measured outlet water temperature is 35 °F below the outlet water temperature measured at the start of the test. If the specified temperature drop in the outlet water temperature does not occur within a 24 hour time period then the test shall be stopped at the end of 24 hours from the start of the test.

Finally, DOE must specify a method for determining the storage volume of the water heater. The manufacturers' responses stated that for some water heaters, it will not be necessary to measure the volume if it is less than 10 gallons. Although DOE does not currently prescribe a standby loss standard for instantaneous water heaters and hot water supply boilers with a storage volume below 10 gallons, DOE requires certification of the rated storage volume for all gas-fired and oil-fired instantaneous water heaters and hot water supply boilers. These certification requirements are set forth at 10 CFR 429.44(c)(2)(iv) and (v).

Because flow-activated instantaneous water heaters have heat exchanger designs similar to thermostatically-activated instantaneous water heaters, the issue of measuring the storage volume applies to all instantaneous water heaters and hot water supply boilers. Exhibit G.2 of ANSI Z21.10.3-2011 (that is incorporated by reference into the current DOE test procedure) references section 5.26 of the same testing standard as a method to measure the storage volume of CWH equipment. In response to the February 2014 RFI, HTP raised an issue with regards to the measurement of storage volume for instantaneous water heaters and hot water supply boilers. HTP commented that due to various geometries and sizes, measurement of the storage volume by a third-party laboratory or manufacturer's facility would be difficult and may produce inconsistent results. (HTP, No. 5 at p. 2) As discussed earlier, this issue was also raised by manufacturers in response to DOE's questions on the 2014 AHRI-recommended standby loss test method for flow-activated instantaneous water heaters.

DOE acknowledges the issues highlighted by manufacturers regarding use of section 5.26 of ANSI Z21.10.3-2011 (which corresponds to section 5.27 of ANSI Z21.10.3-2015) to measure the storage volume of instantaneous water heaters and hot water supply boilers, including flow-activated and thermostatically-activated units. To find alternatives to this test method, DOE investigated other options for measuring the storage volume of such water heaters. Through its review, DOE did not identify an alternative test method suitable to measure the storage volume of instantaneous water heaters and hot water supply boilers that would not significantly increase the testing burden for manufacturers. Moreover, section 5.28, "Capacities of tube type water heaters," of ANSI Z21.10.3-2015 does not specify a test method to measure the storage volume.

Instead, section 5.28 of ANSI Z21.10.3-2015 only states that the "volume contained in the water heater shall be determined." The wording of this section and the manufacturers' responses on this test method appear to suggest that the actual method of determination of the volume is left to the discretion of the testing agency.

The test method in section 5.27 of ANSI Z21.10.3-2015 requires the water heater to be weighed dry and empty, and then reweighed when filled with water. The difference in the two values of the weight equate to the weight of the stored water in the water heater. The weight of stored water can be converted into gallons by dividing by the density of water. Although section 5.27 of ANSI Z21.10.3-2015 specifically states that the test be used for storage vessels or water heaters having an input rating of less than 4,000 Btu/h per gallon of capacity, the test method appears to be applicable to any CWH equipment that can be weighed both dry and after being filled with water. The energy conservation standards for instantaneous water heaters are dependent on the rated storage volume. The rated storage volume is needed to determine the appropriate equipment class and, for units with storage volume greater than or equal to 10 gallons, it is required to calculate the standby loss standard. Therefore, DOE must specify a test method to measure the storage volume of water heaters, rather than leave the decision of the appropriate method (e.g., direct measurement, calculation) to individual manufacturers or testing agencies, who may choose different methods for determining the storage volume, which could provide inconsistent results. Based on the foregoing reasoning, and the lack of alternative test methods to measure the storage volume, DOE tentatively concluded that the method presented in section 5.27 of ANSI Z21.10.3-2015 should be used for measurement of the storage volume of instantaneous water heaters and hot water supply boilers that do not meet DOE's proposed

definition for "storage-type instantaneous water heater," including thermostatically-activated and flow-activated instantaneous water heaters. However, because section 5.27 of ANSI Z21.10.3-2015 includes a limitation that the method is only applicable to units containing storage vessels, DOE proposes not to incorporate this section by reference, and instead proposes a test procedure very similar to the method in section 5.27 of ANSI Z21.10.3-2015, with only clarifying changes. Specifically, DOE proposes to remove the limitation that only storage vessels or water heaters having an input rating of less than 4,000 Btu/h per gallon of capacity can be tested using this method, and clarifies that the density of water at the measured water temperature is to be used to convert from the weight of water to the volume in gallons.

Issue 14: DOE requests comment on its proposal to include a test procedure similar to that specified in section 5.27 of ANSI Z21.10.3-2015 for measuring the storage volume of all instantaneous water heaters and hot water supply boilers, including flow-activated instantaneous water heaters. DOE also seeks information on alternative methods for measuring storage volume and the impact of residual water on measuring storage volume of instantaneous water heaters and hot water supply boilers. Further, DOE seeks comment on ways to remove residual water from the water heater that could allow for more accurate and consistent measurement of the storage volume of CWH equipment.

Based on the AHRI-recommended test methods and the responses received from manufacturers, DOE proposes a new standby loss test procedure for flow-activated instantaneous water heaters. The proposed test procedure is based on the 2016 AHRI-recommended test method, specifically the second part of the test method that applies to flow-activated water

heaters that will not initiate burner operation over the course of the test. However, in developing the proposed test method, DOE has departed from the 2016 AHRI-recommended test method in several areas, including the method of test, time duration, and equations to calculate standby loss. DOE also conducted investigative testing on flow-activated instantaneous water heaters that helped inform the proposals made to this test procedure. The following paragraphs describe DOE's proposed test method for measuring the standby loss of flow-activated instantaneous water heaters. The proposed test procedure is also included in the proposed regulatory text for appendix E to subpart G of part 431.

The proposed standby loss test for flow-activated instantaneous water heaters can be started immediately after the thermal efficiency test, using the same test set-up and test conditions. Otherwise, if the standby loss test is conducted separately, install the water heater as per the specifications in section 2 of appendix E to subpart G of part 431. As discussed in section III.H, DOE proposes required locations for temperature-sensing instrumentation for instantaneous water heaters and hot water supply boilers, including flow-activated instantaneous water heaters. For water heaters with multiple outlet water connections leaving the water heater jacket, apply the test set-up provisions proposed in section III.H (also included in appendix C to subpart G of part 431). The representative value of the outlet water temperature used for the standby loss calculations is obtained by taking the average of the water temperatures measured at each water connection leaving the water heater jacket. DOE proposes that the test entity set the data acquisition system to record the supply water temperature, outlet water temperature, ambient room temperature, and electrical consumption (as applicable) at intervals of every 30 seconds.

DOE proposes the test be conducted as follows:

Once the water heater is set up, supply water to the equipment being tested as per section (d) of Annex E.1 of ANSI Z21.10.3-2015. Adjust the water flow rate in such a way that the outlet water reaches a temperature of 70 °F ± 2 °F above the supply water temperature. After the outlet water temperature has remained constant with no variation of more than 2 °F over a 3-minute period and maintains a temperature of 70°F ± 2 °F above the supply water temperature, turn off the supply and outlet water valves that are installed closest to the water heater (as per the provisions in appendix C to subpart G of part 431), and the water pump, simultaneously. Allow the water heater to cut-out. Immediately after the cut-out, begin recording measurements for the standby loss test.

At this time, start the clock and record the initial outlet water temperature, ambient room temperature, and fuel (and electricity) meter reading. Continue to monitor and record the outlet water temperature, the ambient room temperature, the time elapsed from the start of the test, and the electricity consumption at 30-second intervals using a data acquisition system.

Stop the test if the outlet water temperature decreases by 35 °F from the initial outlet water temperature within 24 hours from the start of the test. Record the final outlet water temperature, final ambient room temperature, fuel consumed, electricity consumed, and the time elapsed from the start of the test.

If the outlet water temperature does not decrease by 35 °F from the initial outlet water temperature within 24 hours from the start of the test, then stop the test after 24 hours from the start of the test. Record the final outlet water temperature, final ambient room temperature, fuel consumed, electricity consumed, and the time elapsed from the start of the test.

Use the equation below to calculate the standby loss in terms of percent of total heat content per hour.

$$S = \frac{\frac{k(V_a)(\Delta T_1)}{E_t/100} + E_c + (C_s)(Q_s)(H)}{k(V_a)(\Delta T_2)(t)} \times 100\%$$

Where,

ΔT_1 = Outlet water temperature measured at the start of the test minus outlet water temperature measured at the end of the test, expressed in °F

ΔT_2 = Outlet water temperature at the start of the test minus the ambient room temperature at the start of the test, expressed in °F

k = 8.25 Btu/gallon·°F, the nominal specific heat of water

V_a = Volume of water contained in the water heater in gallons

E_t = Thermal efficiency of the water heater. For electric water heaters with immersed heating elements use 98 percent.

E_c = Electrical energy consumed by the water heater during the duration of the test in Btu

C_s = Correction applied to the heating value of a gas H, when it is metered at temperature and/or pressure conditions other than the standard conditions upon which the value of H is based. C_s is not applicable to oil-fired

equipment.

Q_s = Total fuel flow as metered for gas-fired and oil-fired equipment, expressed in ft^3 (gas) or lb (oil)

H = Higher heating value of gas, expressed in Btu/ft^3 (gas) or Btu/lb (oil)

t = Total duration of the test in hours

S = Standby loss, the average hourly energy required to maintain the stored water temperature expressed as a percentage of the initial heat content of the stored water above room temperature

For gas-fired and oil-fired flow-activated instantaneous water heaters, to calculate the standby loss in terms of Btu per hour, use the following equation:

$$SL = S\% \times K(V_a)(70\ °\text{F})$$

Where, SL refers to the standby loss of the water heater, defined as the amount of energy required to maintain the stored water temperature expressed in Btu per hour.

<u>Issue 15:</u> DOE requests comment from interested parties on all aspects of the proposed test procedure for flow-activated instantaneous water heaters. Specifically, DOE requests comment on its tentative decision to: (1) base the test procedure on the second part of the 2016 AHRI-recommended test method that applies to flow-activated water heaters that will not initiate burner operation over the course of the test; (2) stop the test following a 35 °F ± 2 °F drop in the outlet water temperature or completion of 24 hours, whichever occurs earlier; and (3) use the outlet water temperature as an approximation of the stored water temperature.

H. Test Set Up for Commercial Instantaneous Water Heaters and Hot Water Supply Boilers

The current thermal efficiency and standby loss test methods as described in ANSI Z21.10.3-2011 require commercial instantaneous water heaters and hot water supply boilers to be set up in accordance with Figure 2 of that test standard. Although the figure is not drawn to scale and no measurements are specified, DOE notes that the temperature-sensing instruments for measuring outlet water temperature appear to be placed at a considerable distance away from the water heater being tested. Measuring the temperature at a significant distance away from the water heater could lead to an inaccurate representation of the outlet water temperature due to heat loss in the piping. Even if the pipes are insulated, measuring temperature as close as possible to the outlet ports or possibly inside the port would yield a more accurate representation of the outlet water temperature. The heat loss from the piping would be higher while conducting the standby loss tests that could run for several hours to a maximum of 24 hours for flow-activated instantaneous water heaters and from 24 to 48 hours for other instantaneous water heaters and hot water supply boilers. Moreover, the new standby loss test procedure that is proposed for flow-activated instantaneous water heaters in this NOPR uses the outlet water temperature as an approximation for the stored water temperature inside the water heater. Therefore, it is important that the outlet water temperature be measured as close as possible to the water heater to minimize the effect of piping heat losses while conducting the standby loss test.

To address these issues, DOE proposes to specify the location and a set of requirements for placement of the temperature sensors to ensure that they accurately represent the outlet water temperature for the CWH equipment. Specifically, DOE proposes that the tip or junction of the

temperature sensor be placed: (1) in the water; (2) less than or equal to 5 inches away from the water heater jacket; (3) about the central axis of the water pipe; and (4) with a radiation protection shield. The type and number of temperature-sensing instruments is left to the discretion of the testing operator.

Certain instantaneous CWH models have multiple outlet water connections leaving the jacket that are combined externally using common piping. For such units, DOE proposes that the temperature sensor placement conditions as proposed in the paragraph above be applied to each outlet water connection leaving the water heater jacket. To clarify, DOE proposes that for each outlet water connection leaving the water heater jacket, the temperature sensor be placed; (1) in the water; (2) less than or equal to 5 inches away from the water heater jacket; (3) about the central axis of the water pipe; and (4) with a radiation protection shield. For obtaining a single outlet water temperature value that is representative of the entire water heater, DOE proposes to take the average of the all outlet water temperature measurements (for each outlet water connection leaving the water heater jacket) for each recording of the data-acquisition unit. In addition to these provisions, DOE also proposes that while verifying steady-state operation (prior to the thermal efficiency test) and during the thermal efficiency test, the water temperatures recorded for each outlet water connection leaving the water heater jacket must: (1) be maintained at 70 °F ± 2 °F above the supply water temperature, and (2) not differ from each other by more than 2 °F.

Figure III.4, an adaptation of Figure 3 of ANSI Z21.10.3-2015, shows DOE's proposed location requirements for the temperature-sensing instruments for measuring the inlet and outlet

water temperature of instantaneous water heaters (other than storage-type instantaneous water heaters) and hot water supply boilers.

The current test procedure for instantaneous water heaters and hot water supply boilers does not clearly indicate the location and installation of the supply and outlet water valves. To obtain accurate measurements during standby operation, the water supply must be cut off to prevent mixing of water in the piping lines with that in the water heater during the standby loss test. To address this issue, DOE proposes to require supply and outlet water valves to be installed within a specified distance of the water heater. Specifically, for instantaneous water heaters and hot water supply boilers shipped without external piping installed at the point of manufacture, DOE proposes to require the supply water valve to be installed within 5 inches of the jacket, and the outlet water valve to be installed within 10 inches of the jacket. For instantaneous water heaters and hot water supply boilers with external piping assembled at the manufacturer's premises prior to shipment, DOE proposes to require the supply and outlet water valves to be installed within 5 inches of the end of the piping shipped with the unit. DOE also proposes that the supply and outlet water valves be used to turn off the water flow at the start of the standby loss test for instantaneous water heaters and hot water supply boilers (including "flow-activated instantaneous water heaters"). Figure III.4 shows the location of the valves with respect to other instrumentation used in the test set-up for units shipped without external water piping installed.

The current Federal thermal efficiency test as set forth in 10 CFR 431.106, incorporates by reference Exhibit G.1 of ANSI Z21.10.3-2011, which requires the supply water temperature

to be 70 °F ± 2 °F and the outlet water temperature to be 70 °F ± 2 °F above the supply water temperature with the burner or heating element operating at its full firing rate. Certain instantaneous water heaters and hot water supply boilers, including flow-activated instantaneous water heaters that are designed to operate at higher inlet water temperatures, may not be able to achieve such a temperature rise. The current test procedure addresses this issue by allowing for the use of a recirculating loop (see Figure 3 of ANSI Z21.10.3-2015). Section 5.1.7 of ANSI Z21.10.3-2015 (which contains Figure 3) also requires that the specified inlet water temperature shall not be less than 70 °F or more than 120 °F. In this NOPR, DOE proposes to retain the option of using a recirculating loop and the limits on the inlet water temperature for instantaneous water heaters and hot water supply boilers that are not able to meet the outlet water temperature requirement at the full firing rate. DOE proposes to explicitly state the conditions for using a recirculating loop (i.e., that the unit under test is unable to meet the outlet temperature at the full firing rate) and to specify the limits set on the inlet water temperature (measured at T_5), as contained in section 5.1.7 of ANSI Z21.10.3-2015. Figure III.4 shows the arrangement for optional use of a recirculating loop. DOE proposes to clarify that the supply water temperature measured at T_1 must be maintained at 70 °F ± 2 °F during the entire course of the thermal efficiency test (as applicable) and prior to starting the standby loss test, while the temperature measurement at T_5 must not be less than 70 °F or more than 120 °F.

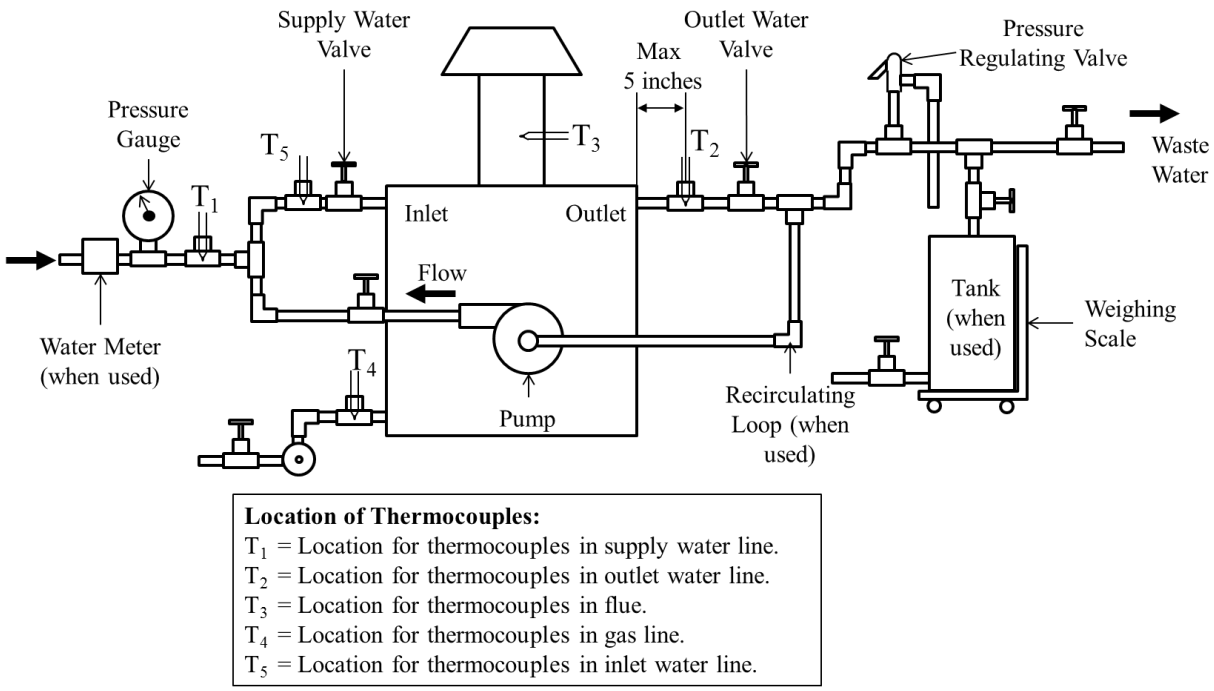

Figure III.4 Installation and set-up of instantaneous water heaters (other than storage-type) and hot water supply boilers for thermal efficiency and standby loss test methods. (Adapted from Figure 3 of ANSI Z21.10.3-2015)

Figure III.4 and the proposed specifications for the placement of temperature sensors, placement of water valves, and placement of a recirculating loop (when used) are included in appendix C to subpart G of part 431.

Issue 16: DOE seeks comment on its proposed change to the location of temperature measurement for the outlet water temperature with the associated conditions for placement of temperature-sensing instruments in water pipes, as well as the placement of the supply and outlet water valves. Specifically, DOE requests comment on whether such a change would provide more accurate test results, and whether the change would be burdensome to manufacturers. Additionally, DOE requests information on any alternative arrangements to measure the outlet

water temperature accurately and in close proximity to the hot water outlet of the tested CWH equipment.

I. Changes to the Standby Loss Test for Instantaneous Water Heaters and Hot Water Supply Boilers Other than Flow-Activated Instantaneous Water Heaters

Currently, all instantaneous water heaters and hot water supply boilers having a storage capacity of ten gallons or more are required to be tested for standby loss as per the test method in Exhibit G.2 of ANSI Z21.10.3-2011, which is incorporated by reference into DOE's current test procedure. In the February 2014 RFI, DOE sought comments on the repeatability of thermal efficiency and standby loss test methods included in the ANSI Z21.10.3-2011 and ANSI Z21.10.3-2013 test methods. 79 FR 10999, 11001-02 (Feb. 27, 2014). DOE discussed the comments received in response to this issue generally in section III.B of this NOPR. In its response to this issue, HTP stated that currently, there is no standby loss test method that is suitable for hot water supply boilers containing ten gallons or more of stored water. (HTP, No. 5 at p. 2) While responding to a different issue related to the applicability of standby loss test procedure to flow-activated water heaters, AHRI commented that the current standby loss test procedure is designed for tank-type water heaters which are thermostatically-activated. (AHRI, No. 2 at p. 4)

DOE reviewed the comments made by HTP and AHRI with regards to the standby loss test procedure for instantaneous water heaters and hot water supply boilers. DOE notes that the equation used to calculate standby loss in DOE's test method for instantaneous water heaters and hot water supply boilers (as specified in Exhibit G.2 of ANSI Z21.10.3-2011) uses two

temperature differential terms that both include the measurement of the mean tank temperature taken during the course of the test. To calculate the standby loss of CWH equipment, the current Federal test method requires parameters to be measured that allow for the calculation of: (1) the amount of energy consumed to maintain the stored water at the required temperature during standby mode; (2) the heat lost to the atmosphere from the stored water; and (3) the change in total heat content of the water heater between the start and the end of the test. Both the terms described in (2) and (3) are calculated using the stored water temperature, which are represented in DOE's current test method by the mean tank temperature measured during the standby loss test. Instantaneous water heaters and hot water supply boilers that do not meet DOE's proposed definition for "storage-type instantaneous water heater" (see section III.F of this document) are generally not equipped with an integral hot water storage tank, but rather, the stored water is contained within the heat exchanger. Unlike storage water heaters and storage-type instantaneous water heaters, these instantaneous water heaters and hot water supply boilers generally have water-tube heat exchangers[17] and do not store water at a uniform temperature in the heat exchanger. Due to complex heat exchanger geometries, an accurate measurement of the mean temperature of water stored within the heat exchanger is often difficult or impossible to obtain. As a result, DOE has tentatively concluded that modifications to the standby loss test method are warranted for instantaneous water heaters and hot water supply boilers that have a storage capacity of ten gallons or more, but that do not meet DOE's proposed definition for "storage-type instantaneous water heater." In this NOPR, DOE proposes a separate standby loss test procedure in section III.G for flow-activated instantaneous water heaters, which have no means of burner or heating element activation unless hot water is drawn. In this section (i.e.,

[17] By water-tube heat exchangers, DOE refers to a heat exchanger where water flows inside heat exchanger tubes and is heated by an external source of energy.

section III.I), DOE proposes a new standby loss test procedure for instantaneous water heaters and hot water supply boilers. This proposed test procedure would only apply to instantaneous water heaters and hot water supply boilers that do not meet DOE's proposed definitions for "storage-type instantaneous water heater" or "flow-activated instantaneous water heater." The proposed test procedure is also specified in appendices C and D to subpart G of part 431.

DOE encountered the same issue for flow-activated water heaters and addressed this problem in the proposed test procedure described in section III.G. While thermostatically-activated instantaneous water heaters and hot water supply boilers differ from flow-activated instantaneous water heaters in their mechanism to initiate burner or heating element operation, these two kinds of equipment share similar heat exchanger geometries and designs. In section III.G of this rulemaking, DOE discusses the responses received from manufacturers on this issue for the standby loss test method for flow-activated instantaneous water heaters. In summary, manufacturers suggested that a measurement of the outlet water temperature could be used as an approximation of the mean stored water temperature within the heat exchanger for the purpose of calculating standby loss. Due to the similarity in heat exchanger design between flow-activated and thermostatically-activated instantaneous water heaters and hot water supply boilers, DOE has tentatively concluded that the same rationale would apply for thermostatically-activated instantaneous water heaters and hot water supply boilers (i.e., a measurement of the outlet temperature can be used as a reasonable approximation of the mean stored water temperature within the heat exchanger for the purpose of calculating standby loss for thermostatically-activated instantaneous water heaters and hot water supply boilers). Therefore, DOE proposes to use the outlet water temperature as measured by the outlet water temperature sensor, instead of

the mean tank temperature, to approximate the stored water temperature for the purpose of calculating standby loss for instantaneous water heaters and hot water supply boilers that do not meet DOE's proposed definition for "storage-type instantaneous water heater," including flow-activated instantaneous water heaters.

DOE also considered several other options to calculate or measure the average stored water temperature (e.g., using the average of the supply and outlet water temperature, inserting thermocouples inside the heat exchanger through the outlet port of the water heater, or using heat transfer equations to back calculate stored water temperature from the heat exchanger tube wall temperature). DOE has tentatively concluded that none of the other options considered would provide an accurate measurement of the average stored water temperature inside the water heater. Moreover, because of the complex heat exchanger geometry, there would be significant difficulty involved in attempting to calculate the average stored water temperature.

DOE is also aware that in many applications, instantaneous water heaters or hot water supply boilers are used to supply hot water to an external tank where the water is stored at a fixed temperature. In these applications, a thermostat is often used to maintain the desired water temperature in the external tank as part of a recirculation loop. If the water temperature in the tank falls below the set point, then the thermostat directs the water heater to cycle on, and the recirculation pump circulates water throughout the loop, withdrawing water from the tank, and resupplying heated water back into the tank. While reviewing the standby loss test procedure for its applicability to thermostatically-activated instantaneous water heaters and hot water supply boilers, DOE considered the option of specifying an external UFHWST with specific

characteristics (e.g., insulation, storage volume) to be able to calculate the mean tank temperature. However, DOE has tentatively decided not to use this approach to conduct the standby loss test for thermostatically-activated instantaneous water heaters because it would also include the standby loss that occurs in the external tank and therefore, would not be representative of the water heater itself. Therefore, DOE has decided not to use an external tank to measure the mean tank temperature to conduct the standby loss test for thermostatically-activated instantaneous water heaters and hot water supply boilers.

Based on the discussion above, DOE proposes the following test procedure for determining the standby loss of instantaneous water heaters and hot water supply boilers (except for those that meet the proposed definition of a "storage-type instantaneous water heater" and "flow-activated instantaneous water heater"). This proposal includes some language from Annex E.2 of ANSI Z21.10.3-2015.

The proposed standby loss test method for instantaneous water heaters and hot water supply boilers (except those meeting the definition of "storage-type instantaneous water heater" and "flow-activated instantaneous water heater") can be started immediately after the thermal efficiency test, using the same test set-up and test conditions. Otherwise, if the standby loss test is conducted separately, one would install the water heater as per Figure III.4 in section III.H of this rulemaking (Figure 4 in appendix C to subpart G of part 431) and section 2 of appendix C or D (as applicable) to subpart G of part 431 to set up the water heater for testing. As discussed in section III.H, DOE proposes required locations for temperature-sensing instrumentation and water valves for all instantaneous water heaters and hot water supply boilers, including flow-activated instantaneous water heaters, but excluding storage-type instantaneous water heaters.

For water heaters with multiple supply or outlet water connections entering the water heater jacket, apply the outlet water temperature sensor and water valves placement provisions proposed in section III.H to each pipe connection entering or leaving the water heater. The representative value of the outlet water temperature used for the standby loss calculations is obtained by taking the average of the water temperatures measured at each water connection leaving the water heater jacket.

DOE proposes that the test be conducted as follows:

Once the water heater is set up, open the flow valves, start the water pump, open the gas supply valves (as applicable), and then initiate the ignition process. After the water heater starts with the initiation of burner or heating element operation, monitor the supply and outlet water temperatures. Adjust the water flow rate in such a way that the outlet water temperature reaches a temperature of 70 °F ± 2 °F above the supply water temperature. Once this temperature is achieved, maintain the flow rate and keep monitoring the outlet water temperature. After the outlet water temperature has remained constant with no variation of more than 2 °F over a 3-minute period, turn off the water supply and outlet valves and, if necessary, the water pump. The fuel supply must be kept on for the entire duration of the test for gas-fired and oil-fired equipment. After the first cut-out, allow the water heater to remain in standby mode until the next cut-out.

At this point, start the clock and record the initial outlet water and ambient room temperatures. Keep recording the outlet water temperature, the ambient room temperature, the time elapsed from the start of the test, the electricity consumption, and the fuel consumption at

an interval of 30 seconds (as proposed in this rulemaking and discussed in section III.B) using a data acquisition system.

The duration of this test will be the earlier of: (1) the first cut-out that occurs after 24 hours or (2) 48 hours.

At the conclusion of the test, record the total fuel flow, electricity consumption, the final ambient room temperature, the time duration in hours rounded to the nearest one hundredth of an hour, and the final outlet water temperature.

Use the equation below to calculate the standby loss in terms of percent of total heat content per hour.

$$S = \frac{E_c + (C_s)(Q_s)(H) - \left(\frac{k(V_a)(\Delta T_4)}{E_t/100}\right)}{k(V_a)(\Delta T_3)(t)} \times 100\%$$

Where,

ΔT_3 = Average value of outlet water temperature minus the average value of the ambient room temperature, expressed in °F

ΔT_4 = Final outlet water temperature measured at the end of the test minus the initial outlet water temperature measured at the start of the test, expressed in °F

k = 8.25 Btu/gallon·°F, the nominal specific heat of water

V_a = Volume of water contained in the water heater in gallons

E_t = Thermal efficiency of the water heater. For electric water heaters with

immersed heating elements use 98 percent.

E_c = Electrical energy consumed by the water heater during the duration of the test in Btu

t = Total duration of the test in hours

C_s = Correction applied to the heating value of a gas H, when it is metered at temperature and/or pressure conditions other than the standard conditions upon which the value of H is based. C_s is not applicable to oil-fired equipment.

Q_s = Total fuel flow as metered for gas-fired and oil-fired equipment, expressed in ft^3 (gas) or lb (oil).

H = Higher heating value of gas, expressed in Btu/ft^3 (gas) or Btu/lb (oil)

S = Standby loss, the average hourly energy required to maintain the stored water temperature expressed as a percentage of the heat content of the stored water above room temperature

The standby loss expressed in Btu per hour must be calculated as follows: SL (Btu per hour) = S (% per hour) × 8.25 (Btu/gal-°F) × Measured Volume (gal) × 70 (degrees F).

Issue 17: DOE requests comment on the proposed test procedure for instantaneous water heaters and hot water supply boilers (except those meeting the proposed definition of "storage-type instantaneous water heater" and "flow-activated instantaneous water heater"). DOE also requests feedback on its tentative decision to use the outlet water temperature instead of the mean tank temperature or stored water temperature to conduct the standby loss test. Further,

DOE requests suggestions on methods or approaches that can be used to measure the stored water temperature accurately.

J. Test Procedure for Rating Commercial Heat Pump Water Heaters

In the February 2014 RFI, DOE raised an issue with regards to implementing a new test procedure for commercial heat pump water heaters (CHPWHs). 79 FR 10999, 11003 (Feb. 27, 2014). Currently, DOE does not have a test procedure for commercial heat pump water heaters (although a section is reserved at 10 CFR 431.107). Additionally, DOE does not currently have a definition for "commercial heat pump water heater," as would help classify such units. Therefore, DOE proposes the following definition for commercial heat pump water heaters that includes air-source, water-source, and direct geo-exchange CHPWHs.

Commercial heat pump water heater (CHPWH) means a water heater that uses a refrigeration cycle, such as vapor compression, to transfer heat from a low-temperature source to a higher-temperature sink for the purpose of heating potable water, and has a rated electric power input greater than 12 kW. Such equipment includes, but is not limited to, air-source heat pump water heaters, water-source heat pump water heaters, and direct geo-exchange heat pump water heaters.

Issue 18: DOE requests comment on its proposed definition for "commercial heat pump water heater."

DOE is aware that ANSI/ASHRAE Standard 118.1-2012 ("ASHRAE 118.1-2012"), *Method of Testing for Rating Commercial Gas, Electric, and Oil Service Water-Heating Equipment* is used as an industry test method for CHPWHs. ASHRAE 118.1-2012 includes several test methods, including a method for determining coefficient of performance (COP_h), standby loss for commercial heat pump water heaters, and cooling output of air-source CHPWHs. DOE considered this test procedure for adoption as the Federal test method for CHPWHs. In addition to ASHRAE 118.1-2012, DOE is also aware of another relevant industry standard, the ANSI/AHRI Standard 1300 (I-P)-2013 ("AHRI 1300"), *Performance Rating of Commercial Heat Pump Water Heaters*. AHRI 1300 specifies rating conditions (e.g., entering water temperature, leaving water temperature, and other evaporator side rating conditions) for testing CHPWHs, but it references ASHRAE 118.1-2012 for the actual procedure to conduct the test. DOE considered the rating conditions specified in AHRI 1300 for developing a test procedure for CHPWHs. In the February 2014 RFI, DOE requested public comment on adopting an appropriate test procedure for CHPWHs. DOE sought comment on both of the aforementioned industry test methods and on whether any modifications would be needed for adopting them as the Federal test method. 79 FR 10999, 11003 (Feb. 27, 2014).

DOE received several comments from interested parties in response to this issue. Bradford White supported the use of AHRI 1300 as an appropriate test method for rating CHPWHs. (Bradford White, No. 8 at p. 2) AHRI commented that the efficiency of CHPWHs should be measured at two rating conditions. AHRI also supported the use of AHRI 1300 as the test procedure to measure efficiency of CHPWHs, and HTP stated that it support AHRI's position on this topic. (AHRI, No. 2 at p. 4; HTP, No. 5 at p. 5) Rheem also supported the use

of AHRI 1300 as the rating standard. In addition, Rheem supported any modifications to AHRI 1300 that may be required to address issues identified by industry during testing. (Rheem, No. 3 at p. 2) APPA also supported the use of AHRI 1300 for testing CHPWHs and stated that the AHRI 1300 standard references ASHRAE 118.1, which represents an ANSI-approved consensus of multiple stakeholders. (APPA, No. 6 at p. 2) EEI also supported the use of AHRI 1300 for rating CHPWHs. Both APPA and EEI expressed support for the adoption of an industry test procedure to minimize cost by avoiding duplicative testing standards. (APPA, No. 6 at p. 2; EEI, No. 9 at p. 2) A.O. Smith recommended the use of ASHRAE 118.1-2012 and stated that ASHRAE 118.1-2012 is being revised to harmonize its rating conditions with the conditions in AHRI 1300. (A. O. Smith, No. 7 at pp. 2-3)

The Joint Advocates also commented that they strongly support DOE's efforts to adopt a consensus test procedure standard for CHPWHs. To assist DOE in the rulemaking, the Joint Advocates posed several questions that may influence DOE's direction for this rulemaking. The Joint Advocates asked whether there are any international standards that have lessons for U.S. practice. (Joint Advocates, No. 4 at pp. 2-3) DOE reviewed the Collaborative Labeling and Appliance Standards Program's (CLASP's) Global Standards and Labeling Database[18] and determined that no other country has adopted efficiency standards for CHPWHs. Additionally, DOE reviewed the Super-efficient Equipment and Appliance Deployment (SEAD) report on potential for harmonization of international standards for heat pump water heaters.[19] This report

[18] "CLASP's Global S&L Database." *CLASP* (Dec. 7, 2015) (Available at: http://www.clasp.ngo/ResourcesTools/Tools/SL_Search)
[19] Additional information on international standards for HPWHs can be found at: http://tinyurl.com/jnx79ay.

primarily discussed residential heat pump water heaters and was not useful in the context of this commercial rulemaking.

The Joint Advocates asked how first-hour supply capability is treated as a capacity measure for CHPWHs. (Joint Advocates, No. 4 at pp. 2-3) DOE acknowledges that delivery capacity of CWH equipment, including CHPWHs, is an important metric for selection and sizing of equipment. However, DOE does not believe such a capacity measure is needed in its test procedure for energy efficiency, as information regarding capacity is already typically readily available in manufacturer literature.

The Joint Advocates asked about the potential impacts of ambient conditions on the test procedure. (Joint Advocates, No. 4 at pp. 2-3) In response, DOE conducted exploratory tests on different CHPWH units at the different rating conditions specified in ASHRAE 118.1-2012 and AHRI 1300. DOE considered the information and results gathered from these tests in the development of the proposed test procedure for CHPWHs. The exploratory tests are discussed in more detail later in this section.

The Joint Advocates raised the issue of the need to consider the capabilities of different refrigerants to achieve temperature rise that is required for commercial applications (i.e., outlet water temperature of ~170 °F). (Joint Advocates, No. 4 at pp. 2-3) DOE notes that most of the CHPWH models available on the market use R-134a, R-410A or R-22 as refrigerants. Further, DOE notes that industry test standards (e.g., ASHRAE 118.1-2012 and AHRI 1300) specify an outlet water temperature of 120 °F for testing of heat pump water heaters, and do not

differentiate based on type of refrigerant used. DOE has found in examining CHPWHs, that an outlet water temperature of 120 °F is typical and readily achievable in applications that would be suitable for a CHWPH, regardless of refrigerant type. Based on the foregoing, DOE has tentatively decided not to provide different outlet water temperature conditions based on the type of refrigerant being used.

The Joint Advocates suggested that DOE should consider a different requirement such as maximum rated temperature instead of a constant test temperature. (Joint Advocates, No. 4 at pp. 2-3) DOE's proposed test procedure for CHPWHs includes a provision allowing units that are unable to meet the outlet water temperature at low entering water temperatures to be tested using a higher supply temperature. These provisions are discussed in greater detail later on in this section.

The Joint Advocates asked whether the cooled evaporator air could be used for cooling spaces and whether the energy value of this benefit could be included. (Joint Advocates, No. 4 at pp. 2-3) DOE appreciates that in some sites, cool air rejected from the evaporator coil may provide an ancillary benefit by providing additional space cooling. However, DOE does not propose to include a methodology to measure the cooling performance of a commercial heat pump water heater. DOE finds that such a methodology would be overly burdensome to manufacturers in relation to the uncertain benefit provided to commercial consumers.

In addition, the Joint Advocates expressed their goals for the CHPWH standard as: (1) allowing fair comparison between products and (2) giving contractors enough information to

help customers make informed decisions. According to the Joint Advocates, CHPWHs will require a single metric to be useful and have suggested a blend of the current metrics as a single rating parameter. (Joint Advocates, No. 4 at pp. 2-3) Although DOE proposes a test procedure for CHPWHs in this NOPR, the scope of this rulemaking does not include amending energy conservation standards for CHPWHs. In this NOPR, DOE only proposes a test procedure that manufacturers can use to rate their products, without a requirement to certify COP_h ratings to DOE. In its analysis for this NOPR, DOE considered whether the proposed test procedures for all kinds of CHPWHs would allow for fair comparison between products. Specifically, DOE reviewed and proposes to incorporate by reference certain sections of relevant industry test methods to ensure DOE's test procedure is consistent with industry-accepted test methods. DOE also conducted investigative testing of several air-source CHPWHs from different manufacturers to verify the appropriateness of the proposed test procedure and the consistency of results. With regards to the metric, DOE notes that the industry test standards (ASHRAE 118.1-2012 and AHRI 1300) use the coefficient of performance (COP) as the energy efficiency metric for rating CHPWHs. To ensure consistency with these industry test standards, DOE has tentatively decided to use the same energy efficiency metric (COP) for rating CHPWHs.

The second supplemental comment from AHRI in response to the February 2014 RFI includes recommended rating conditions for testing several kinds of CHPWHs. (AHRI (2015), No. 13, pp. 1-2) AHRI recommended four categories of CHPWHs based on the heat source (i.e., air-source, direct geo-exchange, indoor water-source, and ground water-source) with one set of rating conditions for each category. (AHRI (2015), No. 13 at pp. 1-2) The AHRI-recommended rating conditions that are specified in their comments are shown in Table III-2:

Table III-2 AHRI-Recommended Classifications and Rating Conditions for CHPWHs[20]

Classification based on heat source	Recommended Rating Conditions
Air-source commercial heat pump water heater	Entering water temperature: 110 °F Entering air conditions: 80.6 °F dry bulb and 71.2 °F wet bulb
Direct geo-exchange commercial heat pump water heater	Entering water temperature: 110 °F Evaporator refrigerant temperature: 32 °F
Indoor water-source commercial heat pump water heater	Entering water temperature: 110 °F Evaporator entering water temperature: 68 °F
Ground water-source commercial heat pump water heater	Entering water temperature: 110 °F Evaporator entering water temperature: 50 °F

DOE reviewed AHRI's comments carefully and assessed whether the recommended rating conditions for CHPWHs would sufficiently cover the types of units that are available on the market. As indicated in Table III-2, AHRI recommended separate rating conditions for indoor water-source CHPWHs and ground water-source CHPWHs, despite the fact that both utilize water or another liquid as the evaporator heat source. DOE sees merit in having separate rating conditions for indoor water-source and ground water-source units, because the temperature of water entering the evaporator would be different for each application. However, for the purpose of testing and rating CHPWHs, both indoor water-source CHPWHs and ground water-source CHPWHs can be tested using the same test procedure but with different rating conditions.

[20] The AHRI recommended classifications and rating conditions for CHPWHs can be found in their comments at : http://www.regulations.gov/#!documentDetail;D=EERE-2014-BT-TP-0008-0013

ASHRAE 118.1-2012 includes a similar classification with separate test procedures for air-source, direct geo-exchange, and water-source CHPWHs. The test procedure for water-source CHPWHs in ASHRAE 118.1-2012 applies to both indoor water-source CHPWHs and ground water-source CHPWHs. After considering the applications and characteristics of the different kinds of CHPWHs and the classification used in ASHRAE 118.1-2012, DOE proposes separate test procedures for air-source, direct geo-exchange, and water-source CHPWHs. The proposed test procedure for water-source CHPWHs would be used to rate both ground water-source and indoor water-source models with different rating conditions for each category.

To differentiate the four categories of CHPWHs from each other, DOE proposes to add definitions for "Air-source commercial heat pump water heater", "Direct geo-exchange commercial heat pump water heater", "Indoor water-source commercial heat pump water heater", and "Ground water-source commercial heat pump water heater," as set out in the regulatory text at the end of this document.

Issue 19: DOE requests comment on the proposed categories of CHPWHs and related definitions. In particular, DOE requests comments on CHPWH heat sources that are currently available for commercial applications.

To develop new test procedures for all four categories of CHPWHs, DOE reviewed both ASHRAE 118.1-2012 and AHRI 1300. As noted earlier, AHRI 1300 only provides rating conditions and references ASHRAE 118.1-2012 for the actual test method. ASHRAE 118.1-

2012 is an industry test method used to rate gas-fired, electric, and oil-fired CWH equipment. For the purpose of testing, ASHRAE 118.1-2012 classifies CHPWHs into two types: (1) "Type IV" – equipment that can be operated without requiring a connection to a storage tank; and (2) "Type V" – equipment that requires connection to a storage tank for operation. ASHRAE 118.1-2012 specifies separate test methods to rate the two types of equipment. The test procedure described in ASHRAE 118.1-2012 for Type V units requires the unit to be connected to a tank that is either supplied by the manufacturer along with the unit or is specified by the manufacturer. However, after reviewing product literature, DOE notes that generally, CHPWH manufacturers neither supply a storage tank with the equipment, nor specify a tank appropriate for that equipment. The ASHRAE 118.1-2012 test procedure does not include a test method for Type V units for which an appropriate tank is neither supplied nor specified by the manufacturer. Without connecting an appropriate tank, Type V equipment cannot be tested using the Type V equipment test procedure as specified in ASHRAE 118.1-2012.

DOE considered establishing a "standard" tank for rating the energy efficiency of Type V units that are not shipped with a tank and for which manufacturers do not specify the tank to be used. However, DOE tentatively determined that testing and rating a CHPWH by connecting it with a separately supplied tank could be an unfair representation of the actual rating of the unit itself since the efficiency of the system is highly dependent on the characteristics of the tank. Further, different CHPWHs may be designed for use with tanks having different characteristics. Theoretically, the combined efficiency rating of a CHPWH unit when operated along with the tank would be lower than the actual rating of that CHPWH unit alone, because the addition of a tank would allow for heat loss through the tank jacket and piping. Also, there may be

inconsistencies in selecting tanks used for efficiency testing if manufacturers do not supply or specify an appropriate tank for the CHPWH units. This inconsistency could lead to energy savings smaller than expected for commercial consumers if CHPWHs are tested with storage tanks more efficient than those that those commercial consumers use.

Considering these issues associated with testing a CHPWH unit with an external tank connected to it, DOE explored the possibility of formulating a new test method to test all CHPWH units as Type IV equipment (i.e., without connecting a hot water storage tank while testing). In order to verify the applicability of the Type IV test to all CHPWH units, DOE selected three air-source CHPWH units available on the market and tested them using the test procedure specified in ASHRAE 118.1-2012. DOE tested the units at six different rating conditions specified for air-source CHPWHs by both ASHRAE 118.1-2012 and AHRI 1300, as shown in Table III-3. The units that were chosen for testing were purchased from different manufacturers and had varying levels of heating capacities (100,000 Btu/h; 30,000 Btu/h; and 275,000 Btu/h). All of these units had an internal pump fitted within the unit, so no external pump was required to supply inlet water to the condenser of the heat pump.

The test procedure for air-source CHPWHs as specified in ASHRAE 118.1-2012 requires the CHPWH to be set up according to Figure 5 of that test standard. The water flow rate through the unit is adjusted in such a way that the outlet water temperature is maintained at 120 °F ± 5 °F with no variation of more than 2 °F over a three-minute period. DOE conducted the tests under six different rating conditions, which consist of three different evaporator entering air

temperatures and two supply water temperature conditions. In all, DOE conducted six tests on each CHPWH unit. These test conditions are shown in Table III-3:

Table III-3 Rating Conditions for Testing Commercial Heat Pump Water Heaters

Rating Conditions	Evaporator Entering Air Temperature [°F]		Condenser Entering Water Temperature [°F]
	Dry Bulb	Wet Bulb	
1	95*	75*	70
2	80.6	71.2	70
3	50	44.3	70
4	95*	75*	110*
5	80.6	71.2	110*
6	50	44.3	110*

*Rating conditions which are included in ANSI/ASHRAE 118.1-2012. (Note, all rating conditions in this table are included in AHRI 1300-2013.)

The results obtained from these tests indicate that not all the units were capable of achieving an outlet water temperature of 120 °F ± 5 °F. The 30,000 Btu/h unit was the only unit capable of delivering the required outlet water temperature for all six rating conditions. For rating conditions 1, 2, and 3, the flow rate for the 30,000 Btu/h unit had to be sharply reduced to achieve the high temperature rise from a supply water temperature of 70 °F to outlet water temperature of 120 °F ± 5 °F. However, for the rating conditions 4, 5, and 6, the unit successfully delivered water at a temperature of 120 °F ± 5 °F at the manufacturer's specified flow rate.

The 100,000 Btu/h unit was not able to achieve an outlet water temperature of 120 °F ± 5 °F at rating conditions 1 and 2. Moreover, the unit was unable to operate at rating conditions 3 and 6 (evaporator entering air dry bulb temperature of 50 °F) due to low ambient temperature

conditions. When the unit was tested at rating conditions 4 and 5, the unit was successful at achieving the 120 °F ± 5 °F outlet water temperature at the manufacturer-rated water flow rate.

The 275,000 Btu/h unit was capable of achieving the required 120 °F ± 5 °F outlet water temperature when tested at rating conditions 1 and 2 with the manufacturer's rated water flow rate. However, the unit did not achieve the required outlet water temperature for any of the other rating conditions. A possible reason for this is the low ambient temperature resulting in lower heat being utilized by the heat pump. For rating conditions 4, 5, and 6 where the supply water temperature is maintained at 110 °F, the outlet water temperature exceeded 120 °F ± 5 °F. The water flow rate for these conditions was at the manufacturer's rated flow rate, and the unit's design did not allow the flow rate to be increased above that value.

Based on these tests, two conclusions can be drawn. First, rating conditions 3 and 6, representing an evaporator entering air dry bulb temperature of 50 °F, were not achievable for two of the tested units, (i.e., the 100,000 Btu/h unit and the 275,000 Btu/h unit). One of the reasons for this is the reduced temperature difference between the refrigerant saturation temperature and the evaporator entering air temperature, which severely limits the evaporator performance. Second, the lower heating capacity units (30,000 Btu/h and 100,000 Btu/h) were able to achieve the required outlet water temperature of 120 °F ± 5 °F at the manufacturer's rated supply water flow rate when the supply water temperature was set to 110 °F, whereas the larger heating capacity unit (275,000 Btu/h) was able to meet the required outlet water temperature condition at the manufacturer's rated flow rate when the supply water temperature was set to 70

°F. This indicates that some units are sized to achieve a low water temperature rise, while others are sized to achieve a higher water temperature rise.

On the basis of these exploratory tests, DOE was able to determine applicability of the test procedure described for "Type IV" units in ASHRAE 118.1-2012 to air-source CHPWH units. Based on the results and the discussion above, DOE has tentatively concluded that the method of test described for "Type IV" units in ASHRAE 118.1-2012 can be used to test air-source CHPWHs but with certain modifications. These proposed modifications include establishing: (1) a single evaporator air entering rating condition with a dry bulb temperature of 80.6 °F ± 1 °F and a wet bulb temperature of 71.2 °F ± 1 °F; (2) a supply water temperature of 70 °F ± 1 °F (or 110 °F ± 1 °F, only if the required outlet water temperature condition is not achieved while testing at a supply water temperature of 70 °F ± 1 °F).

DOE did not conduct exploratory tests for other categories of CHPWHs (i.e., direct geo-exchange, indoor water-source, and ground water-source CHPWHs). As discussed previously, AHRI's initial comment recommended using AHRI 1300 for rating CHPWHs (which utilizes ASHRAE 118.1-2012 as the actual procedure), and AHRI's supplemental comment suggested rating conditions appropriate for direct geo-exchange, indoor water-source, and ground water-source CHPWHs. As DOE has not identified any other industry test method applicable to CHPWHs, DOE has tentatively determined to use the test method for "Type IV" equipment specified in ASHRAE 118.1-2012 with rating conditions recommended by AHRI (Table III-2) for testing the energy efficiency of direct geo-exchange, indoor water-source, and ground water-source CHPWHs. Specifically, DOE proposes that direct geo-exchange CHPWHs be tested

using the ASHRAE 118.1-2012 test procedure for "Type IV" direct geo-exchange heat pump water heaters with an entering water temperature of 110 °F and evaporator refrigerant temperature of 32 °F. DOE proposes indoor water-source and ground water-source CHPWHs be tested according to the ASHRAE 118.1-2012 test procedure for "Type IV" water-source heat pump water heaters, with an entering water temperature of 110 °F and evaporator entering water temperature of 68 °F and 50 °F for indoor water-source and ground water-source CHPWHs, respectively.

ASHRAE 118.1-2012 provides several test procedure metrics for measuring energy efficiency (e.g., Coefficient of performance with full input rating (section 9.1.1 of ASHRAE 118.1), Coefficient of performance with reduced input rating (9.1.2 of ASHRAE 118.1), standby energy consumption (section 9.2 of ASHRAE 118.1), and cooling output (section 9.3 of ASHRAE 118.1)). Coefficient of performance refers to the ratio of the useful heat gained by the water (in Btu/h) to the electric power consumed by the unit (in Btu/h). For the current rulemaking, DOE proposes to use the test procedure for measuring coefficient of performance for full input rating. DOE also proposes to define "coefficient of performance" as set out in the regulatory text at the end of this document.

As previously noted, DOE's proposed test procedure for rating CHPWHs would incorporate by reference certain relevant sections of ASHRAE 118.1-2012. The succeeding paragraphs highlight various sections that are relevant to testing units of all four categories of CHPWHs.

DOE proposes that the instrumentation required for the new test procedure would be as described in section 6 of ASHRAE 118.1. Further, DOE proposes that the test set-up, piping, and temperature-sensing locations be as described in sections 7.1, 7.2.1, 7.3.2, 7.3.3, 7.5, and 7.6 of that industry standard for testing Type IV equipment. DOE also proposes to incorporate subsections 7.7.1 to 7.7.6 with the exclusion of section 7.7.5 of ASHRAE 118.1-2012. Section 7.7.5 of ASHRAE 118.1-2012 contains special requirements for testing a heat pump water heater for measurement of space cooling. Section 7.7.7 of ASHRAE 118.1-2012 refers to Table 2 of the same test standard, which provides values for supply (or entering) water temperatures for testing CHPWHs. DOE has tentatively decided not to directly adopt section 7.7.7 of ASHRAE 118.1-2012 and instead proposes to adopt the following provisions to replace section 7.7.7 as follows:

Modifications for Water-Source CHPWHs and Direct Geo-exchange CHPWHs

DOE proposes to test direct geo-exchange, indoor water-source, and ground water-source CHPWHs with a nominal entering water temperature of 110 °F instead of the temperature specified in Table 2 referenced by section 7.7.7 of ASHRAE 118.1.

Modifications for Air-Source CHPWHs

DOE proposes that air-source CHPWH equipment be tested with a supply water temperature of 70 °F ± 1 °F. If the required outlet water temperature condition (specified in section 8.7.2 of ASHRAE 118.1-2012) is not met while testing the unit at 70 °F ± 1 °F, only then should the supply water temperature be provided at 110 °F ± 1 °F. DOE proposes to use the

following steps for setting the supply water temperature that would be applicable to the air-source CHPWH unit being tested:

(1) Set the supply water temperature at 70 °F ± 1 °F and the water flow rate to the rated pump flow rate and start operating the unit. Measure the outlet water temperature at this flow rate to check if an outlet water temperature of 120 °F ± 5 °F is achieved as specified in section 8.7.2 of ASHRAE 118.1-2012. If the outlet water temperature is maintained at this condition (i.e., at a temperature of 120 °F ± 5 °F and with no variation of more than 2 °F over a three-minute period), then conduct the test as per section 9.1.1 of ASHRAE 118.1-2012.

(2) If the outlet water temperature condition is not met, then adjust the flow rate in order to meet the required outlet water temperature condition as per section 8.7.2 of ASHRAE 118.1-2012. Measure the outlet water temperature at the adjusted flow rate to check if an outlet water temperature of 120 °F ± 5 °F is achieved as specified in section 8.7.2 of ASHRAE 118.1-2012. If the outlet water temperature is maintained at this condition (i.e., at a temperature of 120 °F ± 5 °F and with no variation of more than 2 °F over a three-minute period), then conduct the test as per section 9.1.1 of ASHRAE 118.1-2012.

(3) If, after adjusting the flow rate within the range that is achievable by the pump, the equipment is unable to operate or deliver the required outlet water temperature, then reset the flow rate to the rated pump flow rate and change the supply water temperature to 110 °F ± 1 °F. Measure the outlet water temperature at the rated pump flow rate to determine whether the outlet water temperature requirement is met as per section 8.7.2 of ASHRAE 118.1-2012. If the outlet water temperature

is maintained at this condition (i.e., at a temperature of 120 °F ± 5 °F and with no variation of more than 2 °F over a three-minute period), then conduct the test as per section 9.1.1 of ASHRAE 118.1-2012.

(4) If the outlet water temperature condition is not met, then adjust the flow rate in order to meet the required outlet water condition as per section 8.7.2 of ASHRAE 118.1-2012. Measure the outlet water temperature at the adjusted flow rate to check if an outlet water temperature of 110 °F ± 1 °F is achieved as specified in section 8.7.2 of ASHRAE 118.1-2012. If the outlet water temperature is maintained at this condition (i.e., at a temperature of 120 °F ± 5 °F and with no variation of more than 2 °F over a three-minute period), then conduct the test as per section 9.1.1 of ASHRAE 118.1-2012.

(5) If the outlet water temperature condition cannot be met, then a test procedure waiver is necessary to specify an alternative set of test conditions.

DOE proposes to retain Table 3 of ASHRAE 118.1-2012, which provides tolerances of different parameters (e.g., water temperatures, water flow rates) and, sections 7.7.7.1 and 7.7.7.2 of ASHRAE 118.1-2012 that specifies requirements for measurement of water flow and temperature. If the CHPWH is equipped with a thermostat that controls the throttling valve, then use section 7.7.7.3 of ASHRAE 118.1-2012 to set up the thermostat. DOE also proposes to use sections 8.2.1 and 8.7.2 of ASHRAE 118.1-2012 for specifying electrical supply and outlet water temperature requirements, respectively. The method of test would be as per the test procedure specified in section 9.1.1 of ASHRAE 118.1. The rating conditions in ASHRAE 118.1-2012 are contained tables B-1, B-2, and B-3 of appendix B5 of the industry test standard, and referenced

from section 9.4.1 of that test method. Rather than use the rating conditions specified in ASHRAE 118.1-2012, DOE proposes to use a single rating condition for each category of CHPWHs as specified in Table III-4:

Table III-4 Proposed Rating Conditions for CHPWHs.

Category of CHPWH	Evaporator side rating conditions	Condenser side rating conditions
Air-source commercial heat pump water heater	Evaporator entering air conditions: Dry bulb: 80.6 °F ± 1 °F and Wet bulb: 71.2 °F ± 1 °F	Entering water temperature: 70 °F ± 1 °F. Vary water flow rate (if needed) to achieve the outlet water temperature as specified in section 8.7.2 of ASHRAE 118.1-2012. If required outlet water temperature as specified in section 8.7.2 of ASHRAE 118.1-2012 is not met even after varying the flow rate, then change the condenser entering water temperature to 110 °F ± 1 °F. Vary flow rate to achieve the conditions in section 8.7.2 of ASHRAE 118.1-2012
Direct geo-exchange commercial heat pump water heater	Evaporator refrigerant temperature: 32 °F ± 1 °F	Entering water temperature: 110 °F ± 1 °F.
Indoor water-source commercial heat pump water heater	Evaporator entering water temperature: 68 °F ± 1 °F	Entering water temperature: 110 °F ± 1 °F.
Ground water-source commercial heat pump water heater	Evaporator entering water temperature: 50 °F ± 1 °F	Entering water temperature: 110 °F ± 1 °F.

To calculate the final COP_h value, DOE proposes to use section 10.3.1 of ASHRAE 118.1-2012.

To further assess the new test method, DOE conducted a second round of experimental testing on the 100,000 Btu/h CHPWH unit. In this round, the test was carried out exactly as per the proposed test procedure specified in appendix F to subpart G of part 431 and proposed in this section of the NOPR. DOE tested the unit with evaporator entering air temperatures specified in appendix F to subpart G of part 431 (also specified in Table III-4). As proposed, the unit was

first tested with a supply water temperature of 70 °F ± 1 °F. At these rating conditions, the unit was unable to achieve an outlet water temperature of 120 °F ± 5 °F, even after varying the supply water flow rate. The supply water temperature was then re-adjusted to 110 °F ± 1 °F. At this temperature, the unit was successful in delivering and maintaining an outlet water temperature of 120 °F ± 5 °F with no variation of more than 2 °F over a three-minute duration. Results show that the COP_h value obtained in the second round of testing in reasonably close agreement between the COP_h measured in the first round of testing, indicative of the repeatability and practicability of the proposed test procedure.

Issue 20: DOE requests comment on all aspects of the proposed test procedure for commercial heat pump water heaters, and in particular, the proposal to test all units without a storage tank. DOE also invites comment on its recommended rating conditions, particularly the supply water temperatures for air-source commercial heat pump water heaters.

K. Fuel Input Rate

In DOE's existing regulations, equipment classes and the standards that apply to them are determined partly on the basis of the input capacity of the CWH equipment. However, several terms are used in the existing DOE test procedures and energy conservation standards to describe the capacity of the CWH equipment, each of which is derived from the maximum rated fuel input rate to the CWH equipment. For example, the existing DOE test procedure for CWH equipment at 10 CFR 431.106 uses the term "hourly Btu input rate" to describe the measured input rate during the test and "manufacturer's specified input rate" as the value to which the measured input rate should be compared. The energy conservation standards for CWH

equipment at 10 CFR 431.110 use the term "nameplate input rate," which is intended to mean the same thing as "manufacturer's specified input rate." While DOE's test procedure for oil-fired CWH equipment requires the hourly Btu input rate to be within ± 2 percent of the manufacturer's specified input rate, no procedure is included for measuring the input rate.

To clarify standardize terminology throughout its regulations for CWH equipment and to determine the appropriate equipment class for CWH equipment, DOE proposes to define the term "fuel input rate" as set out in the regulatory text at the end of this document.

DOE proposes to use this term in the division of equipment classes and applicable testing provisions to determine the fuel input rate. Manufacturers would be required to measure the fuel input rate during certification testing and use the mean of the measured values, after applying the applicable rounding provisions (discussed later in this section), in certification reports pursuant to 10 CFR 429.44(c)(2). DOE also notes that, for CWH equipment certified using an AEDM, the AEDM would be used to determine the fuel input rate and the same rounding provisions would apply. DOE believes it is critical to clarify how the fuel input rate is to be determined because the applicable standards for certain classes of CWH equipment are based in part on the fuel input rate. These proposed additions would clarify for manufacturers what energy conservation standard applies to a given basic model.

DOE also proposes to include equations for determination of fuel input rate in its test procedures for gas-fired and oil-fired CWH equipment. DOE proposes to include Equations C2 and C3 from section C7.2.3 of AHRI 1500-2015 in its test procedures for calculation of fuel

input rate for gas-fired and oil-fired CWH equipment, respectively. DOE also proposes that the fuel input rate be determined by measuring fuel consumption at 3 consecutive 10-minute intervals during the 30-minute thermal efficiency test. The overall fuel input rate for the thermal efficiency test will be calculated using the fuel consumption over the entire 30-minute test. DOE proposes that during the thermal efficiency test, the measured fuel input rate must not vary by more than ± 2 percent between 10-minute interval readings

Section 5.2.2 of AHRI 1500-2015 specifies rounding gross output (as defined in section 3.20 of AHRI 1500-2015) to the nearest 1,000 Btu/h. However, DOE regulations are based on input rate, not gross output. Therefore, DOE proposes adding a requirement to the DOE test procedure that values of fuel input rate for each unit tested be rounded to the nearest 1,000 Btu/h.

Additionally, DOE proposes that, for its enforcement testing, the overall fuel input rate for the thermal efficiency test would be measured pursuant to 10 CFR 431.106 and compared against the fuel input rate certified by the manufacturer. If the measured fuel input rate is within ± 2 percent of the certified value, then DOE will use the certified value when determining which equipment class to regulate a model. If the measured fuel input rate is not within ± 2 percent of the certified value, then DOE will attempt the following steps to bring the fuel input rate to within ± 2 percent of the certified value. First, DOE will attempt to adjust the gas pressure in order to increase or decrease the fuel input rate within the gas pressure range allowed by the test procedure. If the fuel input rate is still not within ± 2 percent of the certified value, DOE will then attempt to modify the gas inlet orifice (e.g. drill) accordingly. Finally, if these measures do not bring the fuel input rate to within ± 2 percent of the certified value, DOE will use the

measured fuel input rate when determining the equipment class. DOE proposes a fuel input rate tolerance of ± 2 percent based on the steady-state criteria included in sections C4.1.1.1.4 and C4.1.2.1.5 of AHRI 1500-2015, and has tentatively concluded that such a requirement would not impose additional testing burden or affect ratings. DOE proposes this verification process to provide manufacturers with additional information about how DOE will evaluate compliance.

Issue 21: DOE seeks comment regarding its proposed definition and methodology for measuring and verifying fuel input rate for gas-fired and oil-fired CWH equipment.

L. Default Values for Certain Test Parameters for Commercial Water Heating Equipment

DOE incorporates by reference Exhibits G.1 and G.2 of ANSI Z21.10.3-2011 (which correspond to Annexes E.1 and E.2 of ANSI Z21.10.3-2015) in its current test procedure for thermal efficiency and standby loss for CWH equipment. Some of the equipment settings for performing the test procedures as per Annex E.1 of ANSI Z21.10.3-2015 (e.g., water supply pressure, venting requirements) are required to be specified by manufacturers. DOE proposes to include default values for these parameters in its test procedures, to be used if values are not specified in manufacturer literature shipped with the unit[21] or supplemental test information. Specifically, if these values are not included in manufacturer literature shipped with the unit, then DOE will use the values included in the supplemental testing instructions if one is submitted with the certification report. If the values are neither included in manufacturer literature shipped with the unit or in the supplemental test instructions, then DOE will use the default values

[21] Manufacturer literature includes any information on settings, installation, and operation that is shipped with the equipment. This information can be in the form of installation and operation manuals, settings provided on a name plate, or product-specific literature.

proposed in this NOPR. These test procedures and default values would apply to commercial water heating equipment other than residential-duty commercial water heaters.

For all commercial water heating equipment, DOE proposes a default value for maximum water supply pressure of 150 pounds per square inch (psi). For gas-fired commercial water heating equipment powered with natural gas, DOE proposes a default range of allowable gas supply pressure of 4.5 inches of water column (in. w.c.) to 10.5 in. w.c. For gas-fired commercial water heating equipment powered with propane, DOE proposes a default range of 11 in. w.c. to 13 in. w.c.

DOE also includes several requirements specific to oil-fired equipment in its current test procedure for commercial water heating equipment as set forth in 10 CFR 431.106. These requirements include:

(1) Venting Requirements—Connect a vertical length of flue pipe to the flue gas outlet of sufficient height so as to meet the minimum draft specified by the manufacturer; and (2) Oil Supply—Adjust the burner rate so that: (a) The hourly Btu input rate lies within ± 2 percent of the manufacturer's specified input rate, (b) the CO_2 reading shows the value specified by the manufacturer, (c) smoke in the flue does not exceed No. 1 smoke as measured by the procedure in ASTM-D-2156-80, and (d) fuel pump pressure lies within ± 10 percent of manufacturer's specifications.

These requirements depend on manufacturer specifications, including the minimum draft, input rate, CO_2 reading, and fuel pump pressure. Manufacturers are already required to certify the input rate of all covered oil-fired equipment in certification reports submitted to DOE for each basic model. However, not all manufacturers describe venting guidelines for their units using the same format and parameters, and DOE does not wish to establish default values that contradict manufacturer specifications. Therefore, DOE proposes to include a default value for fuel pump pressure and a default range for CO_2 reading in its test procedures, which would only be used if the parameters are not specified in the manufacturer's literature shipped with the unit or in the supplemental test instructions. DOE proposes default values of an allowable range of 9-12 percent for CO_2 reading, and 100 psig fuel pump pressure. DOE determined these values from examination of values for units currently on the market.

Issue 22: DOE requests comment on its proposed default values for maximum water supply pressure for all equipment, allowable gas supply pressure range for equipment powered with natural gas and propane, and the CO_2 reading and fuel pump pressure for oil-fired equipment.

M. Certification Requirements

DOE proposes several changes to its certification requirements for commercial water heating equipment[22] at 10 CFR part 429. DOE proposes to add two requirements to 10 CFR 429.44 for certification of instantaneous water heaters and hot water supply boilers. First, DOE

[22] DOE is also making an editorial change to the certification report provisions in 10 CFR 429.44(c) for commercial water heating equipment by replacing of the term "water heater" and abbreviations of water heater (i.e., WH) with the term "water heating."

proposes to add that manufacturers must certify whether instantaneous water heaters or hot water supply boilers contain submerged heat exchangers or heating elements, in order to allow for proper classification of units under DOE's proposed definition for "storage-type instantaneous water heater." DOE's classification for storage-type instantaneous water heaters is discussed in more detail in section III.F. Second, DOE proposes to add that manufacturers must certify whether instantaneous water heaters or hot water supply boilers require flow of water through the water heater to initiate burner ignition.

Issue 23: DOE requests comment on its proposed additional certification requirements for instantaneous water heaters and hot water supply boilers, and seeks feedback on any other information that should be included for any classes of CWH equipment.

IV. Procedural Issues and Regulatory Review

A. Review Under Executive Orders 12866

The Office of Management and Budget (OMB) has determined that test procedure rulemakings do not constitute "significant regulatory actions" under section 3(f) of Executive Order 12866, "Regulatory Planning and Review," 58 FR 51735 (Oct. 4, 1993). Accordingly, this regulatory action was not subject to review under the Executive Order by the Office of Information and Regulatory Affairs (OIRA) in the Office of Management and Budget (OMB).

B. Review Under the Regulatory Flexibility Act

The Regulatory Flexibility Act (5 U.S.C. 601 et seq., as amended by the Small Business Regulatory Enforcement Fairness Act of 1996) requires preparation of an initial regulatory

flexibility analysis (IRFA) for any rule that by law must be proposed for public comment and a final regulatory flexibility analysis (FRFA) for any such rule that an agency adopts as a final rule, unless the agency certifies that the rule, if promulgated, will not have a significant economic impact on a substantial number of small entities. A regulatory flexibility analysis examines the impact of the rule on small entities and considers alternative ways of reducing negative effects. Also, as required by Executive Order 13272, "Proper Consideration of Small Entities in Agency Rulemaking," 67 FR 53461 (August 16, 2002), DOE published procedures and policies on February 19, 2003, to ensure that the potential impacts of its rules on small entities are properly considered during the DOE rulemaking process. 68 FR 7990. DOE has made its procedures and policies available on the Office of the General Counsel's website at: http://energy.gov/gc/office-general-counsel.

This proposed rule would prescribe test procedure amendments that would be used to determine compliance with energy conservation standards for CWH equipment (except for CHPWHs). The proposed amendments would: (1) update the referenced industry test standards by incorporating by reference ASTM D2156-09, ASTM C177-13, ASTM C518-10, and Annex E.1 of ANSI Z21.10.3-2015; (2) modify the thermal efficiency and standby loss tests for CWH equipment to improve repeatability; (3) include an updated test method for determining the efficiency of unfired hot water storage tanks; (4) change the method for setting the thermostat in the thermal efficiency test for gas-fired and oil-fired storage water heaters and storage-type instantaneous water heaters from measurement of mean tank temperature to measurement of outlet water temperature; (5) clarify test conditions required in the thermal efficiency test method with regard to stored energy loss and steady-state operation; (6) define "storage-type instantaneous water heater" and modify several definitions for consumer water heaters and

commercial water heating equipment included at 10 CFR 430.2 and 10 CFR 431.102, respectively; (7) include a new test method for measurement of standby loss for flow-activated instantaneous water heaters; (8) specify temperature-sensing locations, water valve locations and clarifications for using a recirculating loop for thermal efficiency and standby loss testing of instantaneous water heaters and hot water supply boilers; (9) replace the measurement of mean tank temperature with outlet water temperature for thermostatically-activated instantaneous water heaters (other than storage-type instantaneous water heaters); (10) include a new test method for rating commercial heat pump water heaters; (11) establish a procedure for determining the fuel input rate of gas-fired and oil-fired CWH equipment and specify DOE's measures to verify fuel input rate; (12) add default values for certain testing parameters for commercial water heating equipment; and (13) modify DOE's certification requirements for commercial water heating equipment. DOE reviewed all of these proposed amendments to the existing test procedure under the provisions of the Regulatory Flexibility Act and the policies and procedures published on February 19, 2003. 68 FR 7990. Accordingly, DOE has prepared the following IRFA for the equipment that is the subject of this rulemaking.

1. Description and Estimated Number of Small Entities to Which the Proposed Rule Would Apply

For manufacturers of covered CWH equipment, the Small Business Administration (SBA) has set a size threshold, which defines those entities classified as "small businesses" for the purposes of the statute. DOE used the SBA's small business size standards to determine whether any small entities would be subject to the requirements of the rule. 65 FR 30836, 30848

(May 15, 2000), as amended at 77 FR 49991, 50000, 50011 (August 20, 2012) and codified at 13 CFR part 121. The size standards are listed by North American Industry Classification System (NAICS) code and industry description and are available at: http://www.sba.gov/sites/default/files/Size_Standards_Table.pdf. Manufacturing of CWH equipment is classified under NAICS 333318, "Other Commercial and Service Industry Machinery Manufacturing."[23] The SBA sets a size threshold of 1,000 employees or fewer for a manufacturer that falls under this category to qualify as a small business.

To estimate the number of companies that could be small business manufacturers of equipment covered by this rulemaking, DOE conducted market research and created a database of CWH equipment manufacturers that identified the manufacturers which qualify as small businesses among that list. DOE's research involved industry trade association membership directories (including AHRI[24]), public databases (e.g., the California Energy Commission Appliance Efficiency Database[25]), individual company websites, and market research tools (e.g., Hoovers reports[26]) to create a list of companies that manufacture or sell equipment covered by this rulemaking. DOE's research resulted in a list of all domestic small business manufacturers of CWH equipment covered by this rulemaking. DOE also contacted companies, as necessary, to determine if they both meet the SBA's definition of a "small business" manufacturer and have their manufacturing facilities located within the United States. DOE screened out companies that did not offer products covered by this rulemaking, did not meet the definition of a "small

[23] On October 1, 2012, the NAICS code for "Other Commercial and Service Industry Machinery Manufacturing," which includes manufacturing of commercial water heating equipment, changed from 333319 to 333318.
[24] The AHRI Directory is available at: www.ahridirectory.org/ahriDirectory/pages/home.aspx.
[25] The CEC database is available at: http://www.energy.ca.gov/appliances/.
[26] Hoovers Inc., Company Profiles, Various Companies (Available at: www.hoovers.com/).

business," or a foreign-owned and operated. Based upon this analysis and comprehensive search, DOE identified 28 manufacturers of CWH equipment affected by changes proposed in this NOPR. Of these 28, DOE identified 16 as domestic small businesses. Fifteen of the 16 domestic small businesses are original equipment manufacturers (OEMs) of CWH equipment covered by this rulemaking, while one rebrands equipment manufactured by other OEMs. These fifteen small businesses represent approximately 54 percent of domestic companies that manufacture CWH equipment affected by changes proposed in this NOPR.

2. Description and Estimate of Compliance Requirements

In the following sections, DOE discusses the potential burdens that could be faced by manufacturers of CWH equipment, particularly small businesses, as a result of each of the test procedure amendments proposed in this NOPR.

Updated Industry Test Methods

The proposal to update the currently-referenced industry test method edition from ANSI Z21.10.3-2011 (Exhibits G.1 and G.2) to ANSI Z21.10.3-2015 (Annex E.1) would not impact the requirements, conditions, or duration of DOE's test procedures. DOE only identified one substantive difference between the efficiency test methods in each version – the standby loss equation. Because DOE tentatively concluded that the equation in the currently referenced ANSI Z21.10.3-2011 is correct and proposes to retain that equation in its test procedures, this updated reference to the industry test method should not affect conduct of or ratings from DOE's test procedure.

DOE's current test procedure, specified at 10 CFR 431.106, also requires that flue gases from oil-fired CWH equipment not contain smoke that exceeds No. 1 smoke, as determined by ASTM Standard D2156-80. In this NOPR, DOE proposed to update this reference and incorporate by reference the most recent version of this test method, ASTM D2156-09. DOE did not identify any significant differences between the two versions of this test method; therefore, DOE has tentatively concluded that this updated reference should not affect results from its test procedure. Additionally, DOE proposes several clarifications to the procedure for determining smoke spot number. First, DOE proposes to clarify that the smoke spot number is to be determined once steady-state operation is achieved but before beginning measurements for the thermal efficiency test. Second, DOE proposes to require that the smoke measuring device be connected to an open-ended tube that projects into the flue ¼ to ½ of the pipe diameter. This requirement for the smoke measuring device is adopted from those specified for commercial space heating boilers in AHRI 1500-2015. DOE also proposes to clarify that the smoke spot test is required before conduct of the thermal efficiency test or standby loss test (as applicable) of oil-fired CWH equipment. However, DOE proposes not to require the smoke spot test be conducted prior to beginning an efficiency test (i.e., thermal efficiency or standby loss) if no settings on the water heater have been changed and the water heater has not been turned off since the end of a previously run efficiency test. DOE also proposes that the CO_2 reading be measured at the same times that are required for determining the smoke spot number.

DOE proposes clarification of the test procedure for determining smoke spot number because the current procedure as specified in 10 CFR 431.106 does not specify the timing or location of measuring the smoke spot number. DOE considers conduct of the smoke spot test

and measurement of CO_2 reading before the thermal efficiency test begins to be a less burdensome method than measuring during the test, and, therefore, does not consider this clarification likely to increase testing burden to manufacturers. Additionally, DOE considers its clarification regarding when the smoke spot test and measurement of CO_2 reading are not needed (i.e., when the standby loss test is conducted after the thermal efficiency test) to reduce burden compared to a requirement to measure before the standby loss test or compared to the current test procedure, which simply states that the flue cannot exceed No.1 smoke. Finally, DOE considers its proposed specification of the location within the flue for determination of smoke spot number unlikely to increase burden to manufacturers, given that this requirement was adopted from an industry-accepted test method for similar commercial HVAC equipment.

DOE's current definition for "R-value" at 10 CFR 431.102 references two industry test methods, ASTM C177-97 and ASTM C518-91. In this NOPR, DOE proposes to incorporate by reference the most recent versions of these test methods: ASTM C177-13 and ASTM C518-10. DOE did not identify any significant differences in the procedures for measuring R-value between the two versions of ASTM C177 or between the two versions of ASTM C518. Therefore, this updated reference should not affect results for calculation of R-value per DOE's definition at 10 CFR 431.102.

Test Procedure Repeatability and Ambient Conditions

The proposed modifications to the thermal efficiency and standby loss test methods include: (1) stipulating a maximum air draft requirement of 50 ft/min as measured prior to beginning the thermal efficiency or standby loss tests; (2) tightening the ambient room temperature tolerance from ± 10.0 °F to ± 5.0 °F and the allowed variance from mean ambient

temperature from ± 7.0 °F to ± 2.0 °F; (3) requiring measurement of test air temperature – the temperature of entering combustion air – and requiring the test air temperature not vary by more than ± 5 °F from the ambient room temperature at any measurement interval during the thermal efficiency and standby loss tests for gas-fired and oil-fired CWH equipment; (4) establishing a requirement for ambient relative humidity of 60 percent ± 5 percent during the thermal efficiency and standby loss tests for gas-fired and oil-fired CWH equipment; (5) requiring a soak-in period prior to testing in which the water heater must sit without any draws taking place for at least 12 hours from the end of a recovery from a cold start; (6) specifying the locations of inlet and outlet temperature measurements for storage water heaters, storage-type instantaneous water heaters, and UFHWSTs; and (7) decreasing the time interval for data collection from fifteen minutes to 30 seconds in the thermal efficiency and standby loss tests.

For the first modification, depending on the conditions in the manufacturer's testing area, the manufacturer may need to protect the testing area from drafts greater than 50 ft/min. This draft protection could be accomplished by using wind barriers such as moveable walls, minimizing the opening and closing of doors near the test stand, or sealing windows. To measure draft velocity, manufacturers may have to purchase instrumentation that DOE estimates could cost up to $250. However, any manufacturer of residential water heaters should already have this instrumentation and be able to comply with this stipulation, because it is similar to the requirement established for testing residential water heaters in the July 2014 final rule. 79 FR 40542, 40569 (July 11, 2014).

For the second, third, and fourth modifications that propose changes to specified ambient conditions, manufacturers may not need to make any changes if the ambient temperature and

relative humidity in their testing area already meet the proposed tolerances. DOE is aware that the proposed constraints may in some cases require laboratories to move testing from an uncontrolled environment (i.e., outdoors or facilities open to the outdoors) to a controlled environment. However, DOE understands this to be a small number of cases, and that testing is routinely performed in a laboratory setting with typical heating, ventilating, and air-conditioning systems and controls. DOE notes that the limits are intended to prevent the test from being conducted in extreme ambient conditions, and that the ambient temperature requirements are typical for building heating, ventilating, and air-conditioning systems in normal operating condition. However, if the ambient temperature or relative humidity in the testing area do not already meet these tolerances, the manufacturer may need to improve climate regulation of the test environment, possibly by improving the controls of their thermostats, or preventing hot or cold drafts from entering the testing environment. DOE estimates that improving the controls of the thermostat and preventing hot or cold drafts from entering the testing environment could involve four to eight hours of labor by a general technician. At a rate of $40 per hour for a laboratory technician, DOE estimates the cost for this amount of labor to be between $160 and $320, which DOE believes is modest in comparison to the overall cost of product development and certification. [27]

For the third modification, manufacturers need to measure the test air temperature, which is measured within two feet of the combustion air inlet. While this requirement was adopted from an industry test method for commercial packaged boilers, AHRI 1500-2015, it is not

[27] Based on mean hourly wage from Bureau of Labor Statistics for Mechanical Engineering Technician, occupational code 17-3027: http://www.bls.gov/oes/current/oes173027.htm. Mean hourly wage is multiplied by 1.5 to estimate associated benefits and overhead.

currently required for testing of CWH equipment. Therefore, manufacturers would need to install temperature measuring devices in close proximity to the air intake. However, DOE believes that a requirement for this temperature measurement would not present any significant testing burden to manufacturers, because it would simply involve one more temperature measurement than is already being conducted, and the temperature readings could be recorded using the same data acquisition software that is used for measuring the ambient room temperature.

The fifth modification specifies a 12-hour pre-conditioning period prior to conducting the standby loss test for storage water heaters and storage-type instantaneous water heaters. While this would add to the time required to conduct the test, it would not require extra personnel and would not necessitate the development of additional test platforms. DOE understands that a preconditioning period is already implemented by manufacturers as a best practice to allow the water heater to achieve operational temperature, so the added burden from the 12-hour soak-in would be minimal. In addition, these tests can be conducted in the same facilities used for the current energy testing of these products, so there would be no additional facility costs required by this proposal.

The sixth modification specifies the location for measurement of inlet and outlet temperature for storage water heaters, storage-type instantaneous water heaters, and UFHWSTs. DOE expects these lengths to align with the piping set-ups currently used in most testing of CWH equipment. If slight modifications would be needed to the set-ups currently used, DOE believes that these modifications would be simple and merely involve adding or removing

several inches of piping. Additionally, DOE proposes set-ups for tanks water heaters and storage tanks with connections on the top, side, or bottom – thereby minimizing the likelihood that a significant change to the set-up currently used by manufacturers would be needed. Therefore, DOE has tentatively concluded that this aspect of its proposal would not present a significant burden to manufacturers, including small businesses.

Finally, DOE proposes reducing the time interval for data collection during the thermal efficiency test from 1 minute to 30 seconds and during the standby loss test from 15 minutes to 30 seconds. Because manufacturers are already required to measure at one-minute intervals for the current thermal efficiency test, DOE reasons that manufacturers already use a computer-connected data acquisition system. Changing the time intervals for recording measurements on a data acquisition system is a quick process that requires the operator to simply change the parameters on the computer using the data acquisition system software. Therefore, the manufacturers would not incur any additional testing costs due to the proposed changes in the data recording time intervals.

Unfired Hot Water Storage Tanks

DOE also proposes to adopt a new metric and test procedure for testing the efficiency of unfired hot water storage tanks. In order to comply with Federal regulations, unfired hot water storage tanks are currently required to meet a minimum thermal insulation R-value of 12.5 $°F \cdot ft^2 \cdot h/Btu$. In this NOPR, DOE proposes to adopt a new standby loss metric determined by a new standby loss test method for this class. If this test procedure is adopted, certification of standby loss for covered unfired hot water storage tanks would not be required unless and until

DOE establishes energy conservation standards in terms of standby loss for this class. However, DOE acknowledges that absent a standby loss standard, some manufacturers may choose to rate the efficiency of their unfired hot water storage tank models to help distinguish their products from competitor offerings.

Manufacturers likely already have all necessary equipment and instrumentation for the proposed test method for unfired hot water storage tanks, because such equipment and instrumentation are already needed for testing of other CWH equipment classes. Through its review of the market, DOE found that all unfired hot water storage tank manufacturers also produce other covered CWH equipment, such as storage water heaters, instantaneous water heaters, or hot water supply boilers. Therefore, DOE has tentatively concluded that manufacturers would not incur any additional test facility costs. Small manufacturers with a small number of UFHWST offerings could choose to conduct testing with a third-party lab, which DOE estimates would cost no more than $3,000 per tested UFHWST.

DOE estimates that testing of each unfired hot water storage tank would take less than 2 days, including set-up and testing of storage volume and standby loss. However, the majority of this time would not require attendance by any employees. DOE estimates that setting up and removing the unfired hot water storage tanks from the test stand might require 2-3 hours of time from a laboratory technician. At a rate of $40 per hour for a laboratory technician, DOE estimates the cost for this amount of labor to be no more than $80-120. Additionally, DOE estimates it would take approximately 1 hour of a lab technician's time to complete the test procedure per model tested, which would result in a cost of $40. Therefore, the total labor cost of testing an unfired hot water storage tank would be $120-$160 per model.

Issue 24: DOE requests comment on its cost estimates for manufacturers to test their unfired hot water storage tanks according to DOE's proposed test method.

Thermostat Settings

DOE proposes to change the measurement of temperature in the thermal efficiency test by measuring the outlet water temperature rather than the mean tank temperature for gas-fired and oil-fired storage water heaters and storage-type instantaneous water heaters. This proposal was suggested by manufacturers so that their models can more easily meet the specified conditions in the test procedure without having to sacrifice thermal efficiency gains when designing equipment. Because the outlet water temperature is already measured in the current test method, this proposal would simplify DOE's test procedure, and would not create any additional test burden for manufacturers, including small businesses.

Clarifications to the Thermal Efficiency and Standby Loss Test Procedures

DOE proposes to add clarifying statements to its thermal efficiency and standby loss test procedures. Specifically, DOE proposes to clarify that that during the thermal efficiency test, the burner must continuously fire at the full firing rate for the entire duration of the test and that the outlet water temperature must be maintained at 70 °F ± 2 °F above the supply water temperature. DOE also proposes to clarify that during the thermal efficiency and standby loss tests, no settings on the water heating equipment can be changed until measurements for the test have finished. As discussed in section III.E, several manufacturers indicated that there was not a problem with the current test procedure, as there is a general understanding that the burner must fire at its full input rate throughout the course of the test. Additionally, DOE expects that the majority of manufacturers already perform the thermal efficiency and standby loss tests in a manner as

clarified in DOE's proposal. Therefore, DOE has tentatively concluded that its proposed clarifying statements would only serve to remove any potential confusion regarding its test procedures, and would not add any burden to manufacturers, including small businesses.

Storage-Type Instantaneous Water Heaters

DOE proposes a new definition for "storage-type instantaneous water heater," which are instantaneous water heaters with integral storage tanks and a submerged heat exchanger(s) or heating element(s). DOE believes this kind of water heater should be tested similar to storage water heaters. However, DOE does not currently prescribe separate test procedures for storage water heaters and instantaneous water heaters. Only in the test procedures proposed in this NOPR does DOE prescribe separate standby loss test methods for storage water heaters and instantaneous water heaters. Additionally, DOE's research suggests that manufacturers already categorize units falling under DOE's proposed definition for "storage-type instantaneous water heater" with storage water heaters. Therefore, DOE has tentatively concluded that applying the test procedure prescribed for storage water heaters to storage-type instantaneous water heaters would not present a burden for manufacturers, including small businesses.

Flow-Activated Instantaneous Water Heaters

Currently, all instantaneous water heaters and hot water supply boilers having a capacity of 10 gallons or more are required to undergo the same standby loss test that is prescribed in Exhibit G.2 of ANSI Z21.10.3-2011. However, in this NOPR, DOE is proposing a new and separate standby loss test procedure for flow-activated instantaneous water heaters.

In the proposed standby loss test procedure, the flow-activated instantaneous water heater being tested would not cycle on at any point in the course of the test. Therefore, the amount of fuel consumption is not needed for standby loss calculations. This modification will simplify the test and reduce the amount of data processing required for calculating standby loss metric. As a result, this modification would be beneficial to all manufacturers, including small businesses.

The second difference pertains to the duration of the test. In the current test procedure, the equipment is tested until the first cut-out that occurs after 24 hours or 48 hours, whichever comes first. In the proposed standby loss test procedure for flow-activated instantaneous water heaters, the test ends when the outlet water temperature drops by 35 °F or after 24 hours, whichever comes first. DOE has tentatively concluded that it is very likely that a 35 °F drop in outlet water temperature will occur before 24 hours. Therefore, this proposed modification would likely be beneficial to all manufacturers, including small businesses, as it would reduce the time required to conduct the standby loss test. In addition, DOE notes that the maximum test length of 24 hours in the proposed test method is the same as the current minimum test length in the existing test procedure, so the proposed test would always result in a test length either shorter or equal to that of the current test.

The third difference is with regards to the measurement recording intervals. In the current test procedure, the time interval between two successive readings is 1 minute for the thermal efficiency test and 15 minutes for a standby loss test. In the proposed standby loss test method for flow-activated instantaneous water heaters, DOE has proposed to shorten the time interval to 30 seconds. As with other types of CWH equipment, because manufacturers are already required to measure at one-minute intervals for the thermal efficiency test, DOE believes

that manufacturers already use a computer-connected data acquisition system. Changing the time intervals for recording measurements on a data acquisition system is a quick process that requires the operator to simply change the parameters on the computer using the data acquisition system software. Therefore, DOE believes that manufacturers would not incur any additional testing costs due to the proposed changes in the data recording time intervals.

In summary, DOE has tentatively concluded that the proposed standby loss test procedure for flow-activated water heaters would not impose any significant additional burden on manufacturers, including small businesses.

Changes to the Test Set-Up for Instantaneous Water Heaters and Hot Water Supply Boilers

For the thermal efficiency and standby loss tests of instantaneous water heaters and hot water supply boilers, DOE proposes to move the outlet water temperature-sensing location closer to the CWH equipment being tested, with several requirements for the placement of the temperature-sensing probe in the outlet water line. DOE also proposes to require the supply water valve be within a distance of 5 inches and an outlet water valve be within a distance of 10 inches from the water heater jacket. These modifications in the test set-up would require: (1) moving the tee pipe fitting that is used to hold the outlet water temperature sensing instrument to a location immediately outside the CWH equipment; and (2) moving the supply water valve and outlet water valve that are already installed further away from the water heater to the a location closer to the CWH equipment. In case a new tee is required, DOE estimates that such a fitting would cost approximately $50. DOE reasons that the benefits of better representation of the outlet water temperature and close proximity of the water valves that need to be shut off to retain the hot water in the water heater during the standby loss test outweighs the small potential cost of

an additional pipe fitting. In addition to these changes, DOE also proposes to clarify the conditions for using a recirculating loop. The use of a recirculating loop is allowed in the current test procedure, and, thus, this modification would not cause an increase in testing cost. Therefore, DOE has tentatively concluded that the adjustments described in this paragraph would not impose a significant burden on manufacturers, including small businesses.

Modified Standby Loss Test Procedure for Instantaneous Water Heaters and Hot Water Supply Boilers

DOE's current standby loss test procedure for CWH equipment at 10 CFR 431.106, which incorporates by reference Exhibit G.2 of ANSI Z21.10.3-2011, requires the measurement of the mean tank temperature to calculate standby loss. In this NOPR, DOE proposes to replace the measurement of mean tank temperature with the outlet water temperature for conducting the standby loss test for instantaneous water heaters and hot water supply boilers that do not meet DOE's proposed definition of "storage-type instantaneous water heater." This proposed modification to the current test procedure would only change the terms that are used in calculating standby loss. The recording of the outlet water temperature is already required in the thermal efficiency test procedure for all CWH equipment. Therefore, the only change that the manufacturers would be required to make would be to record the outlet water temperature during the standby loss test. Accordingly, DOE has tentatively concluded that these proposed changes would not be unduly burdensome to manufacturers, including small businesses.

Commercial Heat Pump Water Heaters

DOE currently does not prescribe a test procedure for commercial heat pump water heaters. In this NOPR, DOE proposes to adopt a new test procedure for measurement of the

COP_h of CHPWHs. If this test procedure is adopted, certification of COP_h for CHPWHs would not be required unless and until DOE establishes energy conservation standards for this class in terms of COP_h. However, DOE acknowledges that in the absence of a Federal COP_h standard, some manufacturers may choose to rate the efficiency of their commercial heat pump water heaters to help distinguish their equipment from competitor offerings.

DOE believes that manufacturers of CHPWHs already have the equipment, instrumentation, and facilities (including psychrometric chambers) for testing their units according to the proposed test method, because these would be needed for product development and measurement of COP_h values absent a DOE test method. However, DOE acknowledges that some manufacturers may need to purchase equipment, instrumentation, or test stands for measurement of COP_h according to the proposed test method. For testing air-source CHPWH units, DOE estimates that the cost to build a test stand and a surrounding psychrometric chamber for the testing of CHPWHs would cost no more than $300,000. While the duration of the proposed test for air-source CHWPHs is 30 minutes, DOE estimates the total time, including the time needed for set-up and stabilizing the outlet water temperatures prior to the test, may reach five hours. At a rate of $40 per hour for a laboratory technician, DOE estimates the cost for this labor would be $200 per model tested.

Given the small market size of air-source CHPWHs, DOE believes that most manufacturers without test facilities capable of testing air-source CHPWHs according to DOE's proposed test procedure would choose to conduct testing at a third-party lab. DOE estimates that the average air-source CHPWH manufacturer sells six models, and that the cost of testing an air-

source CHPWH would not exceed $10,000. Therefore, the average testing burden for manufacturers of air-source CHPWHs without testing facilities should not exceed $60,000.

For indoor water-source and ground water-source CHPWHs, water solution conditioning and recirculation equipment similar to a chiller would be required for testing, in addition to equipment needed for testing air-source CHPWHs (e.g., standard piping, instrumentation, a data acquisition system, and test stand). DOE expects most manufacturers already have such equipment in order to test and provide ratings for their current product offerings. However, DOE acknowledges that there may be some manufacturers that do not currently have equipment sufficient for conducting DOE's proposed test procedure. DOE estimates the total cost of a chiller to be about $20,000. The cost of instrumentation, piping, and a data acquisition unit could add up to an additional $5,000. Therefore, DOE does not expect capital investments would exceed $25,000 per manufacturer. DOE estimates that following the test procedure, it would take approximately 5-6 hours to set up the unit and to conduct the test. At a lab technician labor cost of $40 per hour, DOE estimates the total labor cost incurred to test each unit would be between $200 and $240. Alternatively, some manufacturers, including small businesses, may choose to test their units at third-party laboratories instead of investing in in-house testing facilities. DOE estimates that the cost of such testing would not exceed $3,000 per unit. DOE estimates that manufacturers may test about 6 models annually at third-party laboratories. Therefore, the total estimated cost burden for any such manufacturers would not be more than $18,000.

Based on the proposed test procedure, the test set-up for ground or indoor water-source CHPWHs would be similar to that for direct geo-exchange CHPWHs, with the only difference being that the test set-up for direct geo-exchange CHPWHs includes an additional solution heat exchanger. Similar to water-source CHPWHs, DOE expects that most manufacturers of direct geo-exchange CHPWHs already have such equipment in order to test and provide ratings for their current product offerings. DOE understands that the cost of this solution heat exchanger would be the only cost to be added to the total estimated cost for testing ground and indoor water-source CHPWHs in order to arrive at the estimated cost of testing a direct geo-exchange CHPWH. DOE estimates the cost of a liquid-to-liquid heat exchanger to be not more than $30,000. Therefore, the total estimated capital investment cost for testing a direct geo-exchange CHPWH would not exceed $55,000. Similar to water-source CHPWH manufacturers, DOE understands that many manufacturers of direct geo-exchange CHPWHs, including small businesses, may choose to test their units at third-party laboratories instead of investing in in-house testing facilities. DOE estimates the cost of such testing would not exceed $5,000 per unit.

Default Values for Certain Test Parameters

In this NOPR, DOE proposes to add to its test procedure at 10 CFR 431.106 default values for certain test parameters for CWH equipment, to be used if manufacturers do not report these in either the product literature that is shipped with the unit (e.g., installation and operations manual), or their supplemental instructions. DOE proposes the following default values: (1) a maximum allowable water pressure for all CWH equipment; (2) an allowable gas pressure range for gas-fired CWH equipment; and (3) fuel pump pressure and a range for CO_2 reading for oil-

fired CWH equipment. DOE does not expect the proposed default values to present a significant burden to manufacturers because these are basic parameters needed for proper use of CWH equipment and are, therefore, typically specified in manufacturer literature shipped with the unit.

3. Duplication, Overlap, and Conflict with Other Rules and Regulations

DOE is not aware of any rules or regulations that duplicate, overlap, or conflict with the rule being proposed in this document.

4. Significant Alternatives to the Proposed Rule

DOE considered alternative test methods and modifications to the test procedures for CWH equipment, and tentatively determined that there are no better alternatives than the modifications and procedures proposed in this NOPR. DOE examined relevant industry test standards, and incorporated these standards in the proposed test procedures whenever appropriate to reduce test burden to manufacturers. Specifically, this NOPR updates its test procedures for CWH equipment to incorporate by reference the following updated standards: ASTM D2156-09, ASTM C177-13, ASTM C518-10, and Annex E.1 of ANSI Z21.10.3-2015. Additionally, DOE proposes three new test procedures in this NOPR: a standby loss test procedure for UFHWSTs, a standby loss test procedure for flow-activated instantaneous water heaters, and a test procedure for measurement of COP_h of CHPWHs. For the COP_h test for CHPWHs and the standby loss test for UFHWSTs, DOE proposes to incorporate by reference industry-accepted test methods (ASHRAE 118.1-2012 and sections 4, 5, 6.0, and 6.1 of GAMA Testing Standard IWH-TS-1, respectively). For the standby loss test procedure for flow-activated instantaneous water heaters,

DOE proposes a test procedure similar to that recommended by AHRI in supplemental public comments to the February 2014 RFI, with modifications.

C. Review Under the Paperwork Reduction Act of 1995

Manufacturers of CWH equipment must certify to DOE that their products comply with any applicable energy conservation standards. In certifying compliance, manufacturers must test their products according to the DOE test procedures for CWH equipment, including any amendments adopted for those test procedures, on the date that compliance is required. DOE has established regulations for the certification and recordkeeping requirements for all covered consumer products and commercial equipment, including CWH equipment. 76 FR 12422 (March 7, 2011); 80 FR 5099 (Jan. 30, 2015). The collection-of-information requirement for certification and recordkeeping is subject to review and approval by OMB under the Paperwork Reduction Act (PRA). This requirement has been approved by OMB under OMB control number 1910-1400. Public reporting burden for the certification is estimated to average 30 hours per response, including the time for reviewing instructions, searching existing data sources, gathering and maintaining the data needed, and completing and reviewing the collection of information.

Notwithstanding any other provision of the law, no person is required to respond to, nor shall any person be subject to a penalty for failure to comply with, a collection of information subject to the requirements of the PRA, unless that collection of information displays a currently valid OMB Control Number.

D. Review Under the National Environmental Policy Act of 1969

In this proposed rule, DOE proposes test procedure amendments that it expects will be used to develop and implement future energy conservation standards for commercial water heating equipment. DOE has determined that this rule falls into a class of actions that are categorically excluded from review under the National Environmental Policy Act of 1969 (42 U.S.C. 4321 et seq.) and DOE's implementing regulations at 10 CFR part 1021. Specifically, this proposed rule would amend the existing test procedure without affecting the amount, quality, or distribution of energy usage, and, therefore, would not result in any environmental impacts. Thus, this rulemaking is covered by Categorical Exclusion (CX) A5 under 10 CFR part 1021, subpart D, which applies to any rulemaking that interprets or amends an existing rule without changing the environmental effect of that rule. Accordingly, DOE has made a CX determination for this rulemaking, and neither an environmental assessment nor an environmental impact statement is required. DOE's CX determination for this proposed rule is available at: http://energy.gov/nepa/categorical-exclusion-cx-determinations-cx /.

E. Review Under Executive Order 13132

Executive Order 13132, "Federalism," 64 FR 43255 (August 10, 1999), imposes certain requirements on Federal agencies formulating and implementing policies or regulations that preempt State law or that have Federalism implications. The Executive Order requires agencies to examine the constitutional and statutory authority supporting any action that would limit the policymaking discretion of the States and to carefully assess the necessity for such actions. The Executive Order also requires agencies to have an accountable process to ensure meaningful and timely input by State and local officials in the development of regulatory policies that have

Federalism implications. On March 14, 2000, DOE published a statement of policy describing the intergovernmental consultation process it will follow in the development of such regulations. 65 FR 13735. DOE has examined this proposed rule and has tentatively determined that it would not have a substantial direct effect on the States, on the relationship between the national government and the States, or on the distribution of power and responsibilities among the various levels of government. EPCA governs and prescribes Federal preemption of State regulations as to energy conservation for the equipment that is the subject of this proposed rule. States can petition DOE for exemption from such preemption to the extent, and based on criteria, set forth in EPCA. (42 U.S.C. 6297(d)) Therefore, Executive Order 13132 requires no further action.

F. Review Under Executive Order 12988

With respect to the review of existing regulations and the promulgation of new regulations, section 3(a) of Executive Order 12988, "Civil Justice Reform," 61 FR 4729 (Feb. 7, 1996), imposes on Federal agencies the general duty to adhere to the following requirements: (1) eliminate drafting errors and ambiguity; (2) write regulations to minimize litigation; (3) provide a clear legal standard for affected conduct rather than a general standard; and (4) promote simplification and burden reduction. Regarding the review required by section 3(a), section 3(b) of Executive Order 12988 specifically requires that Executive agencies make every reasonable effort to ensure that the regulation: (1) clearly specifies the preemptive effect, if any; (2) clearly specifies any effect on existing Federal law or regulation; (3) provides a clear legal standard for affected conduct while promoting simplification and burden reduction; (4) specifies the retroactive effect, if any; (5) adequately defines key terms; and (6) addresses other important issues affecting clarity and general draftsmanship under any guidelines issued by the Attorney General. Section 3(c) of Executive Order 12988 requires Executive agencies to review

regulations in light of applicable standards in sections 3(a) and 3(b) to determine whether they are met or it is unreasonable to meet one or more of them. DOE has completed the required review and tentatively determined that, to the extent permitted by law, the proposed rule meets the relevant standards of Executive Order 12988.

G. Review Under the Unfunded Mandates Reform Act of 1995

Title II of the Unfunded Mandates Reform Act of 1995 (UMRA) requires each Federal agency to assess the effects of Federal regulatory actions on State, local, and Tribal governments and the private sector. Public Law No. 104-4, sec. 201 (codified at 2 U.S.C. 1531). For a proposed regulatory action likely to result in a rule that may cause the expenditure by State, local, and Tribal governments, in the aggregate, or by the private sector of $100 million or more in any one year (adjusted annually for inflation), section 202 of UMRA requires a Federal agency to publish a written statement that estimates the resulting costs, benefits, and other effects on the national economy. (2 U.S.C. 1532(a), (b)) The UMRA also requires a Federal agency to develop an effective process to permit timely input by elected officers of State, local, and Tribal governments on a proposed "significant intergovernmental mandate," and requires an agency plan for giving notice and opportunity for timely input to potentially affected small governments before establishing any requirements that might significantly or uniquely affect them. On March 18, 1997, DOE published a statement of policy on its process for intergovernmental consultation under UMRA. 62 FR 12820. (This policy is also available at www.energy.gov/gc/office-general-counsel under "Guidance & Opinions" (Rulemaking)) DOE examined the proposed rule according to UMRA and its statement of policy and has tentatively determined that the rule contains neither an intergovernmental mandate, nor a mandate that may result in the expenditure by State, local, and Tribal governments, in the aggregate, or by the private sector, of $100

million or more in any year. Accordingly, no further assessment or analysis is required under UMRA.

H. Review Under the Treasury and General Government Appropriations Act, 1999

Section 654 of the Treasury and General Government Appropriations Act, 1999 (Public Law 105-277) requires Federal agencies to issue a Family Policymaking Assessment for any rule that may affect family well-being. This rule would not have any impact on the autonomy or integrity of the family as an institution. Accordingly, DOE has concluded that it is not necessary to prepare a Family Policymaking Assessment.

I. Review Under Executive Order 12630

Pursuant to Executive Order 12630, "Governmental Actions and Interference with Constitutionally Protected Property Rights," 53 FR 8859 (March 18, 1988), DOE has determined that this proposed rule would not result in any takings that might require compensation under the Fifth Amendment to the U.S. Constitution.

J. Review Under the Treasury and General Government Appropriations Act, 2001

Section 515 of the Treasury and General Government Appropriations Act, 2001 (44 U.S.C. 3516 note) provides for Federal agencies to review most disseminations of information to the public under information quality guidelines established by each agency pursuant to general guidelines issued by OMB. OMB's guidelines were published at 67 FR 8452 (Feb. 22, 2002), and DOE's guidelines were published at 67 FR 62446 (Oct. 7, 2002). DOE has reviewed this proposed rule under the OMB and DOE guidelines and has concluded that it is consistent with the applicable policies in those guidelines.

K. Review Under Executive Order 13211

Executive Order 13211, "Actions Concerning Regulations That Significantly Affect Energy Supply, Distribution, or Use," 66 FR 28355 (May 22, 2001), requires Federal agencies to prepare and submit to OIRA at OMB, a Statement of Energy Effects for any proposed significant energy action. A "significant energy action" is defined as any action by an agency that promulgates or is expected to lead to promulgation of a final rule, and that: (1) is a significant regulatory action under Executive Order 12866, or any successor order; and (2) is likely to have a significant adverse effect on the supply, distribution, or use of energy; or (3) is designated by the Administrator of OIRA as a significant energy action. For any proposed significant energy action, the agency must give a detailed statement of any adverse effects on energy supply, distribution, or use should the proposal be implemented, and of reasonable alternatives to the action and their expected benefits on energy supply, distribution, and use.

DOE has tentatively concluded that the regulatory action in this document, which proposes amendments to the test procedure for measuring the energy efficiency of commercial water heating equipment, is not a significant energy action because it is not a significant regulatory action under Executive Order 12866. Moreover, it would not have a significant adverse effect on the supply, distribution, or use of energy, nor has it been designated as a significant energy action by the Administrator of OIRA. Accordingly, DOE has not prepared a Statement of Energy Effects for this proposed rule.

L. Review Under Section 32 of the Federal Energy Administration Act of 1974

Under section 301 of the Department of Energy Organization Act (Public Law 95–91; 42 U.S.C. 7101 et seq.), DOE must comply with all laws applicable to the former Federal Energy

Administration, including section 32 of the Federal Energy Administration Act of 19744 (Public Law 93-275), as amended by the Federal Energy Administration Authorization Act of 1977 (Public Law 95-70). (15 U.S.C. 788; FEAA) Section 32 essentially provides in relevant part that, where a proposed rule authorizes or requires use of commercial standards, the notice of proposed rulemaking must inform the public of the use and background of such standards. In addition, section 32(c) requires DOE to consult with the Attorney General and the Chairman of the Federal Trade Commission (FTC) concerning the impact of the commercial or industry standards on competition.

This proposed rule incorporates testing methods contained in the following commercial standards: (1) GAMA IWH-TS-1, "Method to Determine Performance of Indirect-Fired Water Heaters," March 2003 edition, sections 4, 5, 6.0, and 6.1; (2) ANSI Z21.10.3-2015/CSA 4.3-2015, "Gas-fired Water Heaters, Volume III, Storage Water Heaters with Input Ratings Above 75,000 Btu Per Hour, Circulating and Instantaneous," annex E.1; (3) ANSI/ASHRAE Standard 118.1-2012, "Method of Testing for Rating Commercial Gas, Electric, and Oil Service Water-Heating Equipment"; (4) ASTM D2156-09, "Standard Test Method for Smoke Density in Flue Gases from Burning Distillate Fuels"; (5) ASTM C177-13, "Standard Test Method for Steady-State Heat Flux Measurements and Thermal Transmission Properties by Means of the Guarded-Hot-Plate Apparatus"; and (6) ASTM C518-10, "Standard Test Method for Steady-State Thermal Transmission Properties by Means of the Heat Flow Meter Apparatus." While the proposed test procedures are not exclusively based on these standards, DOE's test procedures would adopt several provisions from these standards without amendment. The Department has evaluated these standards and is unable to conclude whether they fully comply with the requirements of section 32(b) of the FEAA, (i.e., that they were developed in a manner that fully provides for

public participation, comment, and review). DOE will consult with the Attorney General and the Chairman of the FTC concerning the impact of these test procedures on competition, prior to prescribing a final rule.

M. Description of Materials Incorporated by Reference

In this NOPR, DOE proposes to incorporate by reference the following test standards:

(1) GAMA IWH-TS-1, "Method to Determine Performance of Indirect-Fired Water Heaters," March 2003 edition, sections 4, 5, 6.0, and 6.1;

(2) ANSI Z21.10.3-2015/CSA 4.3-2015, "Gas-fired Water Heaters, Volume III, Storage Water Heaters with Input Ratings Above 75,000 Btu Per Hour, Circulating and Instantaneous," annex E.1;

(3) ANSI/ASHRAE Standard 118.1-2012, "Method of Testing for Rating Commercial Gas, Electric, and Oil Service Water-Heating Equipment";

(4) ASTM D2156-09, "Standard Test Method for Smoke Density in Flue Gases from Burning Distillate Fuels";

(5) ASTM C177-13, "Standard Test Method for Steady-State Heat Flux Measurements and Thermal Transmission Properties by Means of the Guarded-Hot-Plate Apparatus"; and

(6) ASTM C518-10, "Standard Test Method for Steady-State Thermal Transmission Properties by Means of the Heat Flow Meter Apparatus."

GAMA IWH-TS-1 (March 2003 edition) is an industry-accepted test procedure for measuring the performance of indirect water heaters. In this NOPR, DOE proposes to incorporate by reference sections of this test procedure that address test set-up, instrumentation,

and test conditions. GAMA IWH-TS-1, March 2003 edition, is available on AHRI's[28] website at http://www.ahrinet.org/App_Content/ahri/files/standards%20pdfs/Indirect-Fired%20Water%20Heater%20Testing%20Standard03.pdf.

ANSI Z21.10.3-2015/CSA 4.3-2015 is an industry-accepted test procedure for measuring the performance of commercial water heaters. In this NOPR, DOE proposes to incorporate by reference sections of this test procedure that address test set-up, instrumentation, test conditions, and test conduct. ANSI Z21.10.3-2015/CSA 4.3-2015 is available on ANSI's website at http://webstore.ansi.org/RecordDetail.aspx?sku=ANSI+Z21.10.3-2015%2fCSA+4.3-2015.

ANSI/ASHRAE Standard 118.1-2012 is an industry-accepted test procedure for measuring the performance of commercial water heaters. ANSI/ASHRAE 118.1-2012 is available on ANSI's website at http://webstore.ansi.org/RecordDetail.aspx?sku=ANSI%2FASHRAE+Standard+118.1-2012.

ASTM D2156-09 is an industry-accepted test procedure for determining the smoke spot number of flue gases. ASTM D2156-09 is available on ASTM's website at http://www.astm.org/Standards/D2156.htm.

ASTM C177-13 is an industry-accepted test procedure for determining the R-value of a sample using a guarded-hot-plate apparatus. ASTM C177-13 is available on ASTM's website at http://www.astm.org/Standards/C177.htm.

[28] ARI and GAMA merged to become AHRI on January 1, 2008.

ASTM C518-10 is an industry-accepted test procedure for determining the R-value of a sample using a heat flow meter apparatus. ASTM C518-10 is available on ASTM's website at http://www.astm.org/Standards/C518.htm.

V. Public Participation

A. Attendance at the Public Meeting

The time, date, and location of the public meeting are listed in the **DATES** and **ADDRESSES** sections at the beginning of this document. If you plan to attend the public meeting, please notify Ms. Brenda Edwards at (202) 586-2945 or Brenda.Edwards@ee.doe.gov. All participants will undergo security processing upon building entry, and foreign nationals visiting DOE Headquarters are subject to advance security screening procedures which require advance notice prior to attendance at the public meeting. If a foreign national wishes to participate in the public meeting, please inform DOE of this fact as soon as possible by contacting Ms. Regina Washington at (202) 586-1214 or by email: Regina.Washington@ee.doe.gov so that the necessary procedures can be completed.

DOE requires visitors to have laptops and other devices, such as tablets, checked upon entry into the building. Any person wishing to bring these devices into the Forrestal Building must undergo additional screening and will be required to obtain a property pass. Visitors should avoid bringing laptops, or allow an extra 45 minutes to check in. Please report to the visitors desk to have devices checked before proceeding through security.

Due to the REAL ID Act implemented by the Department of Homeland Security (DHS), there have been recent changes regarding identification (ID) requirements for individuals wishing to enter Federal buildings from specific States and U.S. territories. As a result, driver's licenses from the following States or territory will not be accepted for building entry, and instead, one of the alternate forms of ID listed below will be required.

DHS has determined that regular driver's licenses (and ID cards) from the following jurisdictions are not acceptable for entry into DOE facilities: Alaska, American Samoa, Arizona, Louisiana, Maine, Massachusetts, Minnesota, New York, Oklahoma, and Washington.

Acceptable alternate forms of Photo-ID include: U.S. Passport or Passport Card; an Enhanced Driver's License or Enhanced ID-Card issued by the States of Minnesota, New York or Washington (Enhanced licenses issued by these States are clearly marked Enhanced or Enhanced Driver's License); a military ID or other Federal government-issued Photo-ID card.

In addition, attendees may participate in the public meeting via webinar. Webinar registration information, participant instructions, and information about the capabilities available to webinar participants will be published on DOE's website at: https://www1.eere.energy.gov/buildings/appliance_standards/standards.aspx?productid=36. Participants are responsible for ensuring their systems are compatible with the webinar software.

The purpose of the meeting is to receive oral and written comments, data, and other information that would provide understanding about potential issues associated with this

rulemaking. DOE must receive requests to speak at the meeting before 12:00 A.M. EST, June 3, 2016. DOE must receive a signed original and an electronic copy of any statement to be given at the public meeting before 12:00 A.M. EST, June 3, 2016.

B. Procedure for Submitting Requests to Speak and Prepared General Statements for Distribution

Any person who has an interest in the topics addressed in this document, or who is representative of a group or class of persons that has an interest in these issues, may request an opportunity to make an oral presentation at the public meeting. Such persons may hand-deliver requests to speak to the address shown in the **ADDRESSES** section at the beginning of this document between 9:00 a.m. and 4:00 p.m., Monday through Friday, except Federal holidays. Requests may also be sent by mail or email to Ms. Brenda Edwards, U.S. Department of Energy, Building Technologies Office, Mailstop EE-5B, 1000 Independence Avenue, SW, Washington, DC 20585-0121, or Brenda.Edwards@ee.doe.gov. Persons who wish to speak should include with their request a computer diskette or CD-ROM in WordPerfect, Microsoft Word, PDF, or text (ASCII) file format that briefly describes the nature of their interest in this rulemaking and the topics they wish to discuss. Such persons should also provide a daytime telephone number where they can be reached.

DOE requests persons scheduled to make an oral presentation to submit an advance copy of their statements at least one week before the public meeting. At its discretion, DOE may permit persons who cannot supply an advance copy of their statement to participate, if those persons have made advance alternative arrangements with the Building Technologies Office. As necessary, requests to give an oral presentation should ask for such alternative arrangements.

C. Conduct of the Public Meeting

DOE will designate a DOE official to preside at the public meeting and may also use a professional facilitator to aid discussion. The meeting will not be a judicial or evidentiary-type public hearing, but DOE will conduct it in accordance with section 336 of EPCA (42 U.S.C. 6306). A court reporter will be present to record the proceedings and prepare a transcript. DOE reserves the right to schedule the order of presentations and to establish the procedures governing the conduct of the public meeting. There shall not be discussion of proprietary information, costs or prices, market share, or other commercial matters regulated by U.S. anti-trust laws. After the public meeting and until the end of the comment period, interested parties may submit further comments on the proceedings and any aspect of the rulemaking.

The public meeting will be conducted in an informal, conference style. DOE will present summaries of comments received before the public meeting, allow time for prepared general statements by participants, and encourage all interested parties to share their views on issues affecting this rulemaking. Each participant will be allowed to make a general statement (within time limits determined by DOE), before the discussion of specific topics. DOE will allow, as time permits, other participants to comment briefly on any general statements.

At the end of all prepared statements on a topic, DOE will permit participants to clarify their statements briefly and comment on statements made by others. Participants should be prepared to answer questions by DOE and by other participants concerning these issues. DOE representatives may also ask questions of participants concerning other matters relevant to this

rulemaking. The official conducting the public meeting will accept additional comments or questions from those attending, as time permits. The presiding official will announce any further procedural rules or modification of the above procedures that may be needed for the proper conduct of the public meeting.

A transcript of the public meeting will be included in the docket, which can be viewed as described in the Docket section at the beginning of this document and will be accessible on the DOE website. In addition, any person may buy a copy of the transcript from the transcribing reporter.

D. Submission of Comments

DOE will accept comments, data, and information regarding this proposed rule before or after the public meeting, but no later than the date provided in the **DATES** section at the beginning of this proposed rule. Interested parties may submit comments, data, and other information using any of the methods described in the **ADDRESSES** section at the beginning of this notice of proposed rulemaking.

Submitting comments via www.regulations.gov. The www.regulations.gov webpage will require you to provide your name and contact information. Your contact information will be viewable to DOE Building Technologies staff only. Your contact information will not be publicly viewable except for your first and last names, organization name (if any), and submitter representative name (if any). If your comment is not processed properly because of technical difficulties, DOE will use this information to contact you. If DOE cannot read your comment

due to technical difficulties and cannot contact you for clarification, DOE may not be able to consider your comment.

However, your contact information will be publicly viewable if you include it in the comment itself or in any documents attached to your comment. Any information that you do not want to be publicly viewable should not be included in your comment, nor in any document attached to your comment. Otherwise, persons viewing comments will see only first and last names, organization names, correspondence containing comments, and any documents submitted with the comments.

Do not submit to www.regulations.gov information for which disclosure is restricted by statute, such as trade secrets and commercial or financial information (hereinafter referred to as Confidential Business Information (CBI)). Comments submitted through www.regulations.gov cannot be claimed as CBI. Comments received through the website will waive any CBI claims for the information submitted. For information on submitting CBI, see the Confidential Business Information section which follows.

DOE processes submissions made through www.regulations.gov before posting. Normally, comments will be posted within a few days of being submitted. However, if large volumes of comments are being processed simultaneously, your comment may not be viewable for up to several weeks. Please keep the comment tracking number that www.regulations.gov provides after you have successfully uploaded your comment.

Submitting comments via email, hand delivery/courier, or mail. Comments and documents submitted via email, hand delivery/courier, or mail also will be posted to www.regulations.gov. If you do not want your personal contact information to be publicly viewable, do not include it in your comment or any accompanying documents. Instead, provide your contact information in a cover letter. Include your first and last names, email address, telephone number, and optional mailing address. The cover letter will not be publicly viewable as long as it does not include any comments.

Include contact information each time you submit comments, data, documents, and other information to DOE. If you submit via mail or hand delivery/courier, please provide all items on a CD, if feasible, in which case it is not necessary to submit printed copies. No telefacsimiles (faxes) will be accepted.

Comments, data, and other information submitted to DOE electronically should be provided in PDF (preferred), Microsoft Word or Excel, WordPerfect, or text (ASCII) file format. Provide documents that are not secured, that are written in English, and that are free of any defects or viruses. Documents should not contain special characters or any form of encryption, and, if possible, they should carry the electronic signature of the author.

Campaign form letters. Please submit campaign form letters by the originating organization in batches of between 50 to 500 form letters per PDF or as one form letter with a list of supporters' names compiled into one or more PDFs. This reduces comment processing and posting time.

Confidential Business Information. Pursuant to 10 CFR 1004.11, any person submitting information that he or she believes to be confidential and exempt by law from public disclosure should submit via email, postal mail, or hand delivery/courier two well-marked copies: one copy of the document marked "confidential" including all the information believed to be confidential, and one copy of the document marked "non-confidential" with the information believed to be confidential deleted. Submit these documents via email or on a CD, if feasible. DOE will make its own determination about the confidential status of the information and treat it according to its determination.

Factors of interest to DOE when evaluating requests to treat submitted information as confidential include: (1) A description of the items; (2) whether and why such items are customarily treated as confidential within the industry; (3) whether the information is generally known by or available from other sources; (4) whether the information has previously been made available to others without obligation concerning its confidentiality; (5) an explanation of the competitive injury to the submitting person which would result from public disclosure; (6) when such information might lose its confidential character due to the passage of time; and (7) why disclosure of the information would be contrary to the public interest.

It is DOE's policy that all comments may be included in the public docket, without change and as received, including any personal information provided in the comments (except information deemed to be exempt from public disclosure).

E. Issues on Which DOE Seeks Comment

Although DOE welcomes comments on any aspect of this proposal, DOE is particularly interested in receiving comments and views of interested parties concerning the following issues:

Issue 1: DOE seeks comment on its proposed incorporation by reference of ASTM D2156-09, and on its proposed additional specifications for how to set up the smoke spot test, and when to conduct the smoke spot test and measure the CO_2 reading.

Issue 2: DOE seeks comment on its proposed incorporation by reference of ASTM C177-13 and C518-10 for the definition of "R-value."

Issue 3: DOE requests comments and data on its proposed changes to improve the repeatability of the thermal efficiency and standby loss test procedures for certain commercial water heating equipment. Specifically, DOE requests comment on its proposed requirements for ambient relative humidity. DOE does not propose this requirement for testing of electric water heaters, and seeks feedback on whether including such a requirement would improve the repeatability of the standby loss test for electric water heaters. DOE is also seeking comments regarding any additional changes that would improve the repeatability of the thermal efficiency and standby loss tests.

Issue 4: DOE requests comment on the changes to improve test repeatability for its test procedures for certain CWH equipment that were identified but not proposed in this NOPR. If comments suggest that DOE should implement these changes, then DOE will evaluate whether it can adopt those changes in the final rule or must engage in further rulemaking. Particularly, DOE requests data showing

what duration for the steady-state verification period would ensure steady-state operation is reached for gas-fired and oil-fired CWH equipment prior to the thermal efficiency test. DOE also seeks data that suggest suitable tolerances for water temperature and flow rate for this steady-state verification period. Additionally, DOE seeks comment on whether different requirements for establishing steady-state operation are warranted for each equipment class of CWH equipment.

Issue 5: DOE requests comment on the proposed test procedure to determine the standby loss for UFHWSTs, and on whether any other methods, including those detailed in this NOPR, would lead to a better test. Specifically, DOE solicits feedback on whether the proposed test would be long enough to determine an accurate standby loss rating, whether the use of a linear approximation of the temperature decay is sufficient to estimate the standby loss, whether running the test by simply letting the temperature decay (rather than providing external heat to bring the temperature of the water back to operational temperature) is appropriate, and whether the adoption of test conditions (*i.e.*, ambient room temperature, maximum air draft, water temperature) similar to that of other classes of CWH equipment is appropriate. DOE also seeks comment on whether any of its identified alternatives could be modified to improve their repeatability and to decrease test burden, thereby supporting further consideration.

Issue 6: DOE seeks comment on its proposed change to its requirements for setting the tank thermostat in the thermal efficiency and standby loss test procedures for

gas-fired and oil-fired storage and storage-type instantaneous water heaters from measurement of mean tank temperature to measurement of outlet water temperature.

Issue 7: DOE seeks comment on its tentative decision to maintain a mean tank temperature requirement for the standby loss test for electric storage water heaters. DOE also requests comment on its clarifying language for setting tank thermostats for electric storage water heaters with multiple thermostats.

Issue 8: DOE requests comment on its proposed clarifying statements regarding steady-state operation and manipulation of CWH equipment settings during efficiency tests.

Issue 9: DOE requests comment on its proposal to remove exemptions from the definitions for consumer water heaters codified at 10 CFR 430.2 that exclude units that heat water to temperatures greater than 180 °F and units with a storage capacity greater than 120 gallons. DOE also requests comment on its proposal to remove the definitions at 10 CFR 430.2 for "electric heat pump water heater" and "gas-fired heat pump water heater."

Issue 10: DOE requests comment on its proposed changes to its definitions for CWH equipment: (1) replacing the terms "rated input" and "input rating" with "fuel input rate" for gas-fired and oil-fired CWH equipment to match DOE's proposed definition for "fuel input rate;" (2) modifying DOE's definitions for "instantaneous water heater" and "storage water heater" by adding the input criteria that separate consumer water heaters and commercial water heaters and

removing several phrases that do not serve to clarify coverage of units under the definitions; and (3) removing the definition of "packaged boiler."

Issue 11: DOE requests comment on its proposal to modify the definition of "residential-duty commercial water heater" by removing from its scope the following classes: electric storage water heaters, heat pump water heaters with storage, gas-fired instantaneous water heaters, and oil-fired instantaneous water heaters.

Issue 12: DOE seeks comment on its proposed definition of "storage-type instantaneous water heater."

Issue 13: DOE requests comment on its proposed definition for "flow-activated instantaneous water heater." Specifically, DOE requests feedback on whether the definition includes all units and designs for which a separate standby loss test procedure is warranted, and whether any units would be included that do not need a test method separate from the current standby loss test procedure for CWH equipment.

Issue 14: DOE requests comment on its proposal to include a test procedure similar to that specified in section 5.27 of ANSI Z21.10.3-2015 for measuring the storage volume of all instantaneous water heaters and hot water supply boilers, including flow-activated instantaneous water heaters. DOE also seeks information on alternative methods for measuring storage volume and the impact of residual water on measuring storage volume of instantaneous water heaters and hot water supply boilers. Further, DOE seeks comment on ways to remove residual water from the water heater that could allow for more accurate and consistent measurement of the storage volume of CWH equipment.

Issue 15: DOE requests comment from interested parties on all aspects of the proposed test procedure for flow-activated instantaneous water heaters. Specifically, DOE requests comment on its tentative decision to: (1) base the test procedure on the second part of the 2016 AHRI-recommended test method that applies to flow-activated water heaters that will not initiate burner operation over the course of the test; (2) stop the test following a 35 °F ± 2 °F drop in the outlet water temperature or completion of 24 hours, whichever occurs earlier; and (3) use the outlet water temperature as an approximation of the stored water temperature.

Issue 16: DOE seeks comment on its proposed change to the location of temperature measurement for the outlet water temperature with the associated conditions for placement of temperature-sensing instruments in water pipes, as well as the placement of the supply and outlet water valves. Specifically, DOE requests comment on whether such a change would provide more accurate test results, and whether the change would be burdensome to manufacturers. Additionally, DOE requests information on any alternative arrangements to measure the outlet water temperature accurately and in close proximity to the hot water outlet of the tested CWH equipment.

Issue 17: DOE requests comment on the proposed test procedure for instantaneous water heaters and hot water supply boilers (except those meeting the proposed definition of "storage-type instantaneous water heater" and "flow-activated instantaneous water heater"). DOE also requests feedback on its tentative decision to use the outlet water temperature instead of the mean tank

temperature or stored water temperature to conduct the standby loss test. Further, DOE requests suggestions on methods or approaches that can be used to measure the stored water temperature accurately.

Issue 18: DOE requests comment on its proposed definition for "commercial heat pump water heater."

Issue 19: DOE requests comment on the proposed categories of CHPWHs and related definitions. In particular, DOE requests comments on CHPWH heat sources that are currently available for commercial applications.

Issue 20: DOE requests comment on all aspects of the proposed test procedure for commercial heat pump water heaters, and in particular, the proposal to test all units without a storage tank. DOE also invites comment on its recommended rating conditions, particularly the supply water temperatures for air-source commercial heat pump water heaters.

Issue 21: DOE seeks comment regarding its proposed definition and methodology for measuring and verifying fuel input rate for gas-fired and oil-fired CWH equipment.

Issue 22: DOE requests comment on its proposed default values for maximum water supply pressure for all equipment, allowable gas supply pressure range for equipment powered with natural gas and propane, and the CO_2 reading and fuel pump pressure for oil-fired equipment.

Issue 23: DOE requests comment on its proposed additional certification requirements for instantaneous water heaters and hot water supply boilers, and seeks

feedback on any other information that should be included for any classes of CWH equipment.

Issue 24: DOE requests comment on its cost estimates for manufacturers to test their unfired hot water storage tanks according to DOE's proposed test method.

VI. Approval of the Office of the Secretary

The Secretary of Energy has approved publication of this notice of proposed rulemaking.

List of Subjects

10 CFR Part 429

Confidential business information, Energy conservation, Household appliances, Imports, Reporting and recordkeeping requirements.

10 CFR Part 430

Administrative practice and procedure, Confidential business information, Energy conservation, Household appliances, Imports, Intergovernmental relations, Small businesses.

10 CFR Part 431

Administrative practice and procedure, Confidential business information, Incorporation by reference, Test procedures, Reporting and recordkeeping requirements.

Issued in Washington, DC, on April 15, 2016.

_____

Kathleen B. Hogan,
Deputy Assistant Secretary for Energy Efficiency
Energy Efficiency and Renewable Energy.

For the reasons set forth in the preamble, DOE proposes to amend parts 429, 430, and 431 of chapter II, subchapter D of title 10, Code of Federal Regulations, as set forth below:

PART 429 – CERTIFICATION, COMPLIANCE, AND ENFORCEMENT FOR CONSUMER PRODUCTS AND COMMERCIAL AND INDUSTRIAL EQUIPMENT

1. The authority citation for part 429 continues to read as follows:

Authority: 42 U.S.C. 6291–6317.

2. Section 429.44 is amended by:

a. Revising paragraphs (b) and (c);

b. Redesignating paragraph (d) as (e) and revising newly redesignated paragraph (e); and

c. Adding and reserving a new paragraph (d).

The additions and revisions read as follows:

§429.44 Commercial water heating equipment.

* * * * *

(b) Determination of represented values for all types of commercial water heaters except residential-duty commercial water heaters. Manufacturers must determine the represented values, which includes the certified ratings, for each basic model of commercial water heating equipment except residential-duty commercial water heaters, either by testing, in conjunction with the applicable sampling provisions, or by applying an AEDM as set forth in §429.70.

(1) Units to be tested. If the represented value for a given basic model is determined through testing:

(i) The general requirements of §429.11 apply; and

(ii) A sample of sufficient size must be randomly selected and tested to ensure that:

(A) Any represented value of energy consumption or other measure of energy use of a basic model for which consumers would favor lower values must be greater than or equal to the higher of:

(1) The mean of the sample, where:

$$\bar{x} = \frac{1}{n}\sum_{i=1}^{n} x_i$$

And, $\bar{x}$ is the sample mean; n is the number of samples; and x_i is the ith sample; or,

(2) The upper 95 percent confidence limit (UCL) of the true mean divided by 1.05, where:

$$UCL = \bar{x} + t_{.95}\left(\frac{s}{\sqrt{n}}\right)$$

And $\bar{x}$ is the sample mean; s is the sample standard deviation; n is the number of samples; and $t_{0.95}$ is the t statistic for a 95% one-tailed confidence interval with n-1 degrees of freedom (from appendix A to subpart B of this part). And,

(B) Any represented value of energy efficiency or other measure of energy consumption of a basic model for which consumers would favor higher values must be less than or equal to the lower of:

(1) The mean of the sample, where:

$$\bar{x} = \frac{1}{n}\sum_{i=1}^{n} x_i$$

And, $\bar{x}$ is the sample mean; n is the number of samples; and x_i is the ith sample; or,

(2) The lower 95 percent confidence limit (LCL) of the true mean divided by 0.95, where:

$$LCL = \bar{x} - t_{.95}\left(\frac{s}{\sqrt{n}}\right)$$

And $\bar{x}$ is the sample mean; s is the sample standard deviation; n is the number of samples; and $t_{0.95}$ is the t statistic for a 95% one-tailed confidence interval with n-1 degrees of freedom (from appendix A to subpart B of this part).

(2) Alternative efficiency determination methods. In lieu of testing, a represented value of efficiency or consumption for a basic model must be determined through the application of an AEDM pursuant to the requirements of §429.70 and the provisions of this section, where:

(i) Any represented value of energy consumption or other measure of energy use of a basic model for which consumers would favor lower values must be greater than or equal to the output of the AEDM and less than or equal to the Federal standard for that basic model; and

(ii) Any represented value of energy efficiency or other measure of energy consumption of a basic model for which consumers would favor higher values must be less than or equal to the output of the AEDM and greater than or equal to the Federal standard for that basic model.

(3) The representative value of fuel input rate of a basic model reported in accordance with paragraph (c)(2) of this section must be either the mean of the fuel input rate(s) measured for each tested unit of the basic model and determined in accordance with the test procedure in §431.106 of this chapter, or the value determined with an AEDM, and rounded to the nearest 1,000 Btu/h.

(c) Certification reports. For commercial water heating equipment other than residential-duty commercial water heaters:

(1) The requirements of §429.12 apply; and

(2) Pursuant to §429.12(b)(13), a certification report must include the following public equipment-specific information:

(i) Commercial electric storage water heaters: The standby loss in percent per hour (%/h) and the measured storage volume in gallons (gal).

(ii) Commercial gas-fired and oil-fired storage water heaters: The thermal efficiency in percent (%), the standby loss in British thermal units per hour (Btu/h), the rated storage volume in gallons (gal), and the fuel input rate in British thermal units per hour (Btu/h) rounded to the nearest 1,000 Btu/h.

(iii) Commercial water heaters and hot water supply boilers with storage capacity greater than 140 gallons: The thermal efficiency in percent (%), whether the storage volume is greater than 140 gallons (Yes/No); whether the tank surface area is insulated with at least R-12.5 (Yes/No); whether a standing pilot light is used (Yes/No); for gas or oil-fired water heaters, whether the basic model has a fire damper or fan-assisted combustion (Yes/No); and, if applicable, pursuant to 10 CFR 431.110, the standby loss in British thermal units per hour (Btu/h) and measured storage volume in gallons (gal).

(iv) Commercial gas-fired and oil-fired instantaneous water heaters with storage capacity greater than or equal to 10 gallons and gas-fired and oil-fired hot water supply boilers with storage capacity greater than or equal to 10 gallons: The thermal efficiency in percent (%), the standby loss in British thermal units per hour (Btu/h); the rated storage volume in gallons (gal); the fuel input rate in British thermal units per hour (Btu/h) rounded to the nearest 1,000 Btu/h; whether a submerged heat exchanger is used (Yes/No); and whether flow through the water heater is required to initiate burner ignition (Yes/No).

(v) Commercial gas-fired and oil-fired instantaneous water heaters with storage capacity less than 10 gallons and gas-fired and oil-fired hot water supply boilers with storage capacity less than 10 gallons: The thermal efficiency in percent (%), the rated storage volume in gallons (gal), and the fuel input rate in British thermal units per hour (Btu/h) rounded to the nearest 1,000 Btu/h.

(vi) Commercial unfired hot water storage tanks: The thermal insulation (i.e., R-value) and stored volume in gallons (gal).

(3) Pursuant to §429.12(b)(13), a certification report must include the following additional, equipment-specific information:

(i) Whether the basic model is engineered-to-order; and

(ii) For any basic model rated with an AEDM, whether the manufacturer elects the witness test option for verification testing. (See §429.70(c)(5)(iii) for options.) However, the manufacturer may not select more than 10 percent of AEDM-rated basic models to be eligible for witness testing.

(4) Pursuant to §429.12(b)(13), a certification report may include supplemental testing instructions in PDF format. If necessary to run a valid test, the equipment-specific, supplemental information must include any additional testing and testing set-up instructions (e.g., whether a bypass loop was used for testing) for the basic model and all other information (e.g., operational codes or overrides for the control settings) necessary to operate the basic model under the required conditions specified by the relevant test procedure. A manufacturer may also include with a certification report other supplementary items in PDF format for DOE's consideration in performing testing under subpart C of this part. For example, for gas-fired commercial water heating equipment (other than residential-duty commercial water heaters): the maximum water

pressure in pounds per square inch (psi), and the minimum and maximum gas supply pressure in inches of water column (in. w.c.) – including the gas pressure specifications for both natural gas and propane, if models powered by both natural gas and propane are certified under the same basic model; or for oil-fired commercial water heating equipment (other than residential-duty commercial water heaters): the maximum water pressure in pounds per square inch (psi), the allowable range for CO_2 reading in percent (%), and the fuel pump pressure in pounds per square inch gauge (psig); or for electric commercial water heating equipment (other than residential-duty commercial water heaters): the maximum water pressure in pounds per square inch (psi).

(d) [Reserved]

(e) Alternative methods for determining efficiency or energy use for commercial water heating equipment can be found in §429.70.

3. Section 429.134 is amended by adding paragraph (m) to read as follows:

§429.134. Product-specific enforcement provisions.

* * * * *

(m) Commercial water heating equipment other than residential-duty commercial water heaters--(1) Verification of fuel input rate. The fuel input rate of each tested unit of the basic model will be measured pursuant to the test requirements of §431.106 of this chapter. The measured fuel input rate (either the measured fuel input rate for a single unit sample or the average of the measured fuel input rates for a multiple unit sample) will be compared to the value of fuel input rate certified by the manufacturer. The certified fuel input rate will be considered valid only if the measured fuel input rate is within two percent of the certified fuel input rate.

(i) If the certified fuel input rate is found to be valid, then the certified fuel input rate will serve as the basis for determination of the appropriate equipment class and calculation of the standby loss standard (as applicable).

(ii) If the measured fuel input rate is not within two percent of the certified fuel input rate, attempt to achieve the certified fuel input rate (within two percent), DOE will first attempt to increase or decrease the gas pressure within the range specified in manufacturer's instructions in the installation and operation manual shipped with the commercial water heating equipment being tested or in supplemental instructions provided by the manufacturer. If the gas pressure range is not specified by the manufacturer in either of these sources, DOE will use the default range for gas pressure included in appendices A, C, and E to subpart G of part 431 of this chapter. If the measured fuel input rate is still not within two percent of the certified fuel input rate, DOE will attempt to modify the gas inlet orifice. If the measured fuel input rate still is not within two percent of the certified fuel input rate, the measured fuel input rate will serve as the basis for determination of the appropriate equipment class and calculation of the standby loss standard (as applicable).

(2) [Reserved]

PART 430 – ENERGY CONSERVATION PROGRAM FOR CONSUMER PRODUCTS

4. The authority citation for part 430 continues to read as follows:

Authority: 42 U.S.C. 6291-6309; 28 U.S.C. 2461 note.

5. Section 430.2 is amended by:

a. Removing the definitions of “Electric heat pump water heater” and “Gas-fired heat pump water heater”; and

b. Revising the definitions of “Electric instantaneous water heater,” “Electric storage water heater,” “Gas-fired instantaneous water heater,” “Gas-fired storage water heater,” “Oil-fired instantaneous water heater,” and “Oil-fired storage water heater.”

The revisions read as follows:

§ 430.2 Definitions.

* * * * *

Electric instantaneous water heater means a water heater that uses electricity as the energy source, has a nameplate input rating of 12 kW or less, and contains no more than one gallon of water per 4,000 Btu per hour of input.

* * * * *

Electric storage water heater means a water heater that uses electricity as the energy source, has a nameplate input rating of 12 kW or less, and contains more than one gallon of water per 4,000 Btu per hour of input.

* * * * *

Gas-fired instantaneous water heater means a water heater that uses gas as the main energy source, has a nameplate input rating less than 200,000 Btu/h, and contains no more than one gallon of water per 4,000 Btu per hour of input.

Gas-fired storage water heater means a water heater that uses gas as the main energy source, has a nameplate input rating of 75,000 Btu/h or less, and contains more than one gallon of water per 4,000 Btu per hour of input.

* * * * *

Oil-fired instantaneous water heater means a water heater that uses oil as the main energy source, has a nameplate input rating of 210,000 Btu/h or less, and contains no more than one gallon of water per 4,000 Btu per hour of input.

Oil-fired storage water heater means a water heater that uses oil as the main energy source, has a nameplate input rating of 105,000 Btu/h or less, and contains more than one gallon of water per 4,000 Btu per hour of input.

* * * * *

PART 431 – ENERGY EFFICIENCY PROGRAM FOR CERTAIN COMMERCIAL AND INDUSTRIAL EQUIPMENT

6. The authority citation for part 431 continues to read as follows:

Authority: 42 U.S.C. 6291-6317.

7. Section 431.102 is amended by:

a. Revising the section heading;

b. Revising the definitions of “Hot water supply boiler,” “Instantaneous water heater,” “R-value,” “Residential-duty commercial water heater,” “Standby loss,” and “Storage water heater”;

c. Adding, in alphabetical order, definitions for the terms “Air-source commercial heat pump water heater,” “Coefficient of performance,” “Commercial heat pump water heater,” “Direct geo-exchange commercial heat pump water heater,” “Flow-activated instantaneous water heater,” “Fuel input rate,” “Ground water-source commercial heat pump water heater,” “Indoor water-source commercial heat pump water heater,” and “Storage-type instantaneous water heater”; and

d. Removing the definitions of “ASTM-D-2156-80” and “Packaged boiler.”

The revisions and additions read as follows:

§431.102 Definitions concerning commercial water heaters, hot water supply boilers, unfired hot water storage tanks, and commercial heat pump water heaters.

Air-source commercial heat pump water heater means a commercial heat pump water heater that utilizes surrounding air as the heat source.

* * * * *

Coefficient of performance (COP_h) means the dimensionless ratio of the rate of useful heat transfer gained by the water (expressed in Btu/h), to the rate of electric power consumed during operation (expressed in Btu/h).

Commercial heat pump water heater (CHPWH) means a water heater that uses a refrigeration cycle, such as vapor compression, to transfer heat from a low-temperature source to

a higher-temperature sink for the purpose of heating potable water, and has a rated electric power input greater than 12 kW. Such equipment includes, but is not limited to, air-source heat pump water heaters, water-source heat pump water heaters, and direct geo-exchange heat pump water heaters.

Direct geo-exchange commercial heat pump water heater means a commercial heat pump water heater that utilizes the earth as a heat source and allows for direct exchange of heat between the earth and the refrigerant in the evaporator coils.

Flow-activated instantaneous water heater means an instantaneous water heater or hot water supply boiler that does not activate the burner or heating element if no heated water is drawn from the unit.

Fuel input rate means the maximum rate at which gas-fired or oil-fired CWH equipment uses energy as determined using test procedures prescribed under §431.106.

Ground water-source commercial heat pump water heater means a commercial heat pump water heater that utilizes ground water as the heat source.

Hot water supply boiler means a packaged boiler (defined in §431.82) that is industrial equipment and that:

(1) Has a fuel input rate (for gas-fired or oil-fired equipment) or input rating (for electric equipment) from 300,000 Btu/h to 12,500,000 Btu/h and of at least 4,000 Btu/h per gallon of stored water;

(2) Is suitable for heating potable water; and

(3) Meets either or both of the following conditions:

(i) It has the temperature and pressure controls necessary for heating potable water for purposes other than space heating; or

(ii) The manufacturer's product literature, product markings, product marketing, or product installation and operation instructions indicate that the boiler's intended uses include heating potable water for purposes other than space heating.

Indoor water-source commercial heat pump water heater means a commercial heat pump water heater that utilizes indoor water as the heat source.

Instantaneous water heater means a water heater that uses gas, oil, or electricity, including:

(1) Gas-fired instantaneous water heaters with a fuel input rate both greater than 200,000 Btu/h and not less than 4,000 Btu/h per gallon of stored water;

(2) Oil-fired instantaneous water heaters with a fuel input rate both greater than 210,000 Btu/h and not less than 4,000 Btu/h per gallon of stored water; and

(3) Electric instantaneous water heaters with an input capacity both greater than 12 kW and not less than 4,000 Btu/h per gallon of stored water.

R-value means the thermal resistance of insulating material as determined using ASTM Standard Test Method C177-13 or C518-10 (incorporated by reference; see §431.105) and expressed in ($°F \cdot ft^2 \cdot h/Btu$).

Residential-duty commercial water heater means any gas-fired storage, oil-fired storage, or electric instantaneous commercial water heater that meets the following conditions:

(1) For models requiring electricity, uses single-phase external power supply;

(2) Is not designed to provide outlet hot water at temperatures greater than 180°F; and

(3) Does not meet any of the following criteria:

Water Heater Type	Indicator of Non-Residential Application
Gas-fired Storage	Fuel input rate >105 kBtu/h; Rated storage volume >120 gallons
Oil-fired Storage	Fuel input rate >140 kBtu/h; Rated storage volume >120 gallons
Electric Instantaneous	Rated input >58.6 kW; Rated storage volume >2 gallons

Standby loss means:

(1) For electric commercial water heating equipment (not including commercial heat pump water heaters), the average hourly energy required to maintain the stored water temperature expressed as a percent per hour (%/h) of the heat content of the stored water above room temperature and determined in accordance with appendix B, D, or E to subpart G of part 431 (as applicable), denoted by the term "S."

(2) For gas-fired and oil-fired commercial water heating equipment, the average hourly energy required to maintain the stored water temperature expressed in British thermal units per hour (Btu/h) based on a 70 °F temperature differential between stored water and ambient room temperature and determined in accordance with appendix A, C, or E to subpart G of part 431 (as applicable), denoted by the term "SL"; or

(3) For unfired hot water storage tanks, the average hourly energy lost from the storage tank when in standby mode expressed in British thermal units per hour (Btu/h) and determined in accordance with appendix G to subpart G of part 431, denoted by the term "SL."

Storage water heater means a water heater that uses gas, oil, or electricity to heat and store water within the appliance at a thermostatically-controlled temperature for delivery on demand, including:

(1) Gas-fired storage water heaters with a fuel input rate both greater than 75,000 Btu/h and less than 4,000 Btu/h per gallon of stored water;

(2) Oil-fired storage water heaters with a fuel input rate both greater than 105,000 Btu/h and less than 4,000 Btu/h per gallon of stored water; and

(3) Electric storage water heaters with an input capacity both greater than 12 kW and less than 4,000 Btu/h per gallon of stored water.

Storage-type instantaneous water heater means an instantaneous water heater comprising a storage tank with a submerged heat exchanger(s) or heating element(s).

* * * * *

§431.104 [Removed]

8. Section 431.104 is removed.

9. Section 431.105 is amended by:

a. Redesignating paragraph (b) as (c) and revising newly redesignated paragraph (c); and

b. Adding paragraphs (b), (d), and (e).

The revisions and additions read as follows:

§431.105 Materials incorporated by reference.

* * * * *

(b) AHRI. Air-Conditioning, Heating, and Refrigeration Institute, 2111 Wilson Blvd, Suite 500, Arlington, VA 22201, (703) 524-8800, or go to www.ahrinet.org.

(1) GAMA Testing Standard IWH-TS-1, "Method to Determine Performance of Indirect-fired Water Heaters," March 2003 edition, sections 4, 5, 6.0, and 6.1, IBR approved for appendix G to this subpart.

(2) [Reserved]

(c) ANSI. American National Standards Institute, 25 W. 43rd Street, 4th Floor, New York, NY 10036, (212) 642-4900, or go to: http://www.ansi.org.

(1) ANSI Z21.10.3-2015/CSA 4.3-2015 ("ANSI Z21.10.3-2015"), "Gas-fired Water Heaters, Volume III, Storage Water Heaters with Input Ratings Above 75,000 Btu Per Hour, Circulating and Instantaneous," Annex E.1, approved by ANSI on October 5, 2015, IBR approved for appendices A, B, C, D, and E to this subpart.

(2) [Reserved]

(d) ASHRAE. American Society of Heating, Refrigerating and Air-conditioning Engineers, 1791 Tullie Circle, N.E. Atlanta, GA 30329, (800) 527-4723, or go to https://www.ashrae.org.

(1) ANSI/ASHRAE Standard 118.1-2012, "Method of Testing for Rating Commercial Gas, Electric, and Oil Service Water-Heating Equipment," approved by ASHRAE on October 26, 2012 and by ANSI on October 27, 2012, IBR approved for appendix F to this subpart.

(2) [Reserved]

(e) ASTM. ASTM International, 100 Barr Harbor Drive, P.O. Box C700, West Conshohocken, PA 19428-2959, (610) 832-9585, or go to http://www.astm.org.

(1) ASTM C177-13, "Standard Test Method for Steady-State Heat Flux Measurements and Thermal Transmission Properties by Means of the Guarded-Hot-Plate Apparatus," approved by ASTM on September 15, 2013, IBR approved for §431.102.

(2) ASTM C518-10, "Standard Test Method for Steady-State Thermal Transmission Properties by Means of the Heat Flow Meter Apparatus," approved by ASTM on May 1, 2010, IBR approved for §431.102.

(3) ASTM D2156-09, "Standard Test Method for Smoke Density in Flue Gases from Burning Distillate Fuels," approved by ASTM on December 1, 2009 and reapproved by ASTM on October 1, 2013, IBR approved for appendices A, C, and E to this subpart.

10. Section 431.106 is revised to read as follows:

§431.106 Uniform test method for the measurement of energy efficiency of commercial water heating equipment.

(a) Scope. This section contains test procedures for measuring, pursuant to EPCA, the energy efficiency of commercial water heating equipment.

(b) Testing and calculations. Determine the energy efficiency of commercial water heating equipment by conducting the applicable test procedure(s):

(1) Residential-duty commercial water heaters. Test in accordance with appendix E to subpart B of part 430 of this chapter.

(2) Commercial water heating equipment other than residential-duty commercial water heaters. Test covered commercial water heating equipment by following the appropriate test procedures in appendices to subpart G of this part.

(i) Gas-fired and oil-fired storage water heaters and storage-type instantaneous water heaters. Test according to appendix A to subpart G of this part.

(ii) Electric storage water heaters and storage-type instantaneous water heaters. Test according to appendix B to subpart G of this part.

(iii) Gas-fired and oil-fired instantaneous water heaters and hot water supply boilers (other than flow-activated instantaneous water heaters and storage-type instantaneous water heaters). Test according to appendix C to subpart G of this part.

(iv) Electric instantaneous water heaters (other than flow-activated instantaneous water heaters and storage-type instantaneous water heaters). Test according to appendix D to subpart G of this part.

(v) Flow-activated instantaneous water heaters. Test according to appendix E to subpart G of this part.

(vi) Commercial heat pump water heaters. Test according to appendix F to subpart G of this part.

(vii) Unfired hot water storage tanks. Test according to appendix G to subpart G of this part.

§431.107 [Removed]

11. Section 431.107 is removed.

12. Add appendix A to subpart G of part 431 to read as follows:

Appendix A to Subpart G of Part 431 – Uniform Test Method for the Measurement of Thermal Efficiency and Standby Loss of Gas-Fired and Oil-Fired Storage Water Heaters and Storage-Type Instantaneous Water Heaters

Note: Prior to (*date 360 days after date of publication of the test procedure final rule in the Federal Register*), manufacturers must make any representations with respect to the energy use or efficiency of the subject commercial water heating equipment in accordance with the results of testing pursuant to this appendix or the procedures in 10 CFR 431.106 that were in place on January 1, 2016. On and after (*date 360 days after date of publication of the test procedure final rule in the Federal Register*), manufacturers must make any representations with respect to energy use or efficiency of gas-fired and oil-fired storage water heaters and storage-type instantaneous water heaters in accordance with the results of testing pursuant to this appendix to demonstrate compliance with the energy conservation standards at 10 CFR 431.110.

1. General

Determine the thermal efficiency and standby loss (as applicable) in accordance with the following sections of this appendix. Certain sections reference sections of Annex E.1 of ANSI Z21.10.3-2015 (incorporated by reference; see §431.105). Where the instructions contained in the sections below conflict with instructions in Annex E.1 of ANSI Z21.10.3-2015, the instructions contained herein control.

2. Test Set-Up

2.1. Placement of Water Heater. A water heater for installation on combustible floors is to be placed on a ¾-inch plywood platform supported by three 2 x 4-inch runners. If the water heater is for installation on noncombustible floors, suitable noncombustible material is to be placed on the platform. When the use of the platform for a large water heater is not practical, the water heater may be placed on any suitable flooring. A wall-mounted water heater is to be mounted to a simulated wall section.

2.2. Heat Trap and Thermocouple Installation. Inlet and outlet piping must be turned vertically downward from the connections on a tank-type water heater so as to form heat traps. Thermocouples for measuring supply and outlet water temperatures must be installed upstream from the inlet heat trap piping and downstream from the outlet heat trap piping, respectively, in accordance with Figure 1, 2, or 3 (as applicable) of this section. The total vertical piping length between the thermocouple sensing location and the connection port must be equal to 24 inches. For water heaters with vertical connections, the 24 inches of total vertical piping length is divided into 6 inches of vertical piping upstream from the turn for the heat trap and 18 inches downstream from the turn for the heat trap. For water heaters that have vertical connections (top

and bottom), the total horizontal piping between the connection port and the thermocouple sensing location must be equal to the distance between the water heater connection port and the edge of the water heater plus 2 inches. For water heaters that have horizontal connections, the total horizontal piping between the water heater connection port and the temperature sensing location must be equal to 6 inches. The water heater must meet the requirements shown in Figure 1, 2, or 3 (as applicable) at all times during the conduct of the thermal efficiency and standby loss tests. Any factory-supplied heat traps must be installed per the installation instructions while ensuring the requirements in Figure 1, 2, or 3 are met. All dimensions specified in Figure 1, 2, and 3 and in this section are measured from the outer surface of the pipes and water heater outer casing (as applicable).

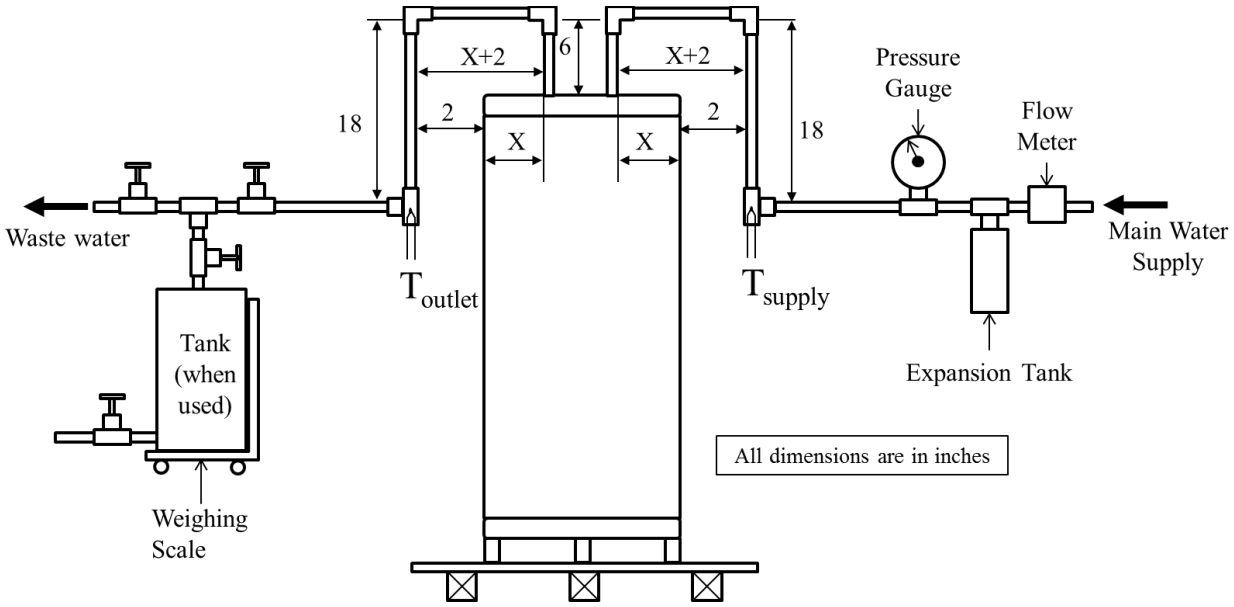

Figure 1. Set-up for thermal efficiency and standby loss test for storage water heaters, storage-type instantaneous water heaters, and unfired hot water storage tanks with vertical (top) connections

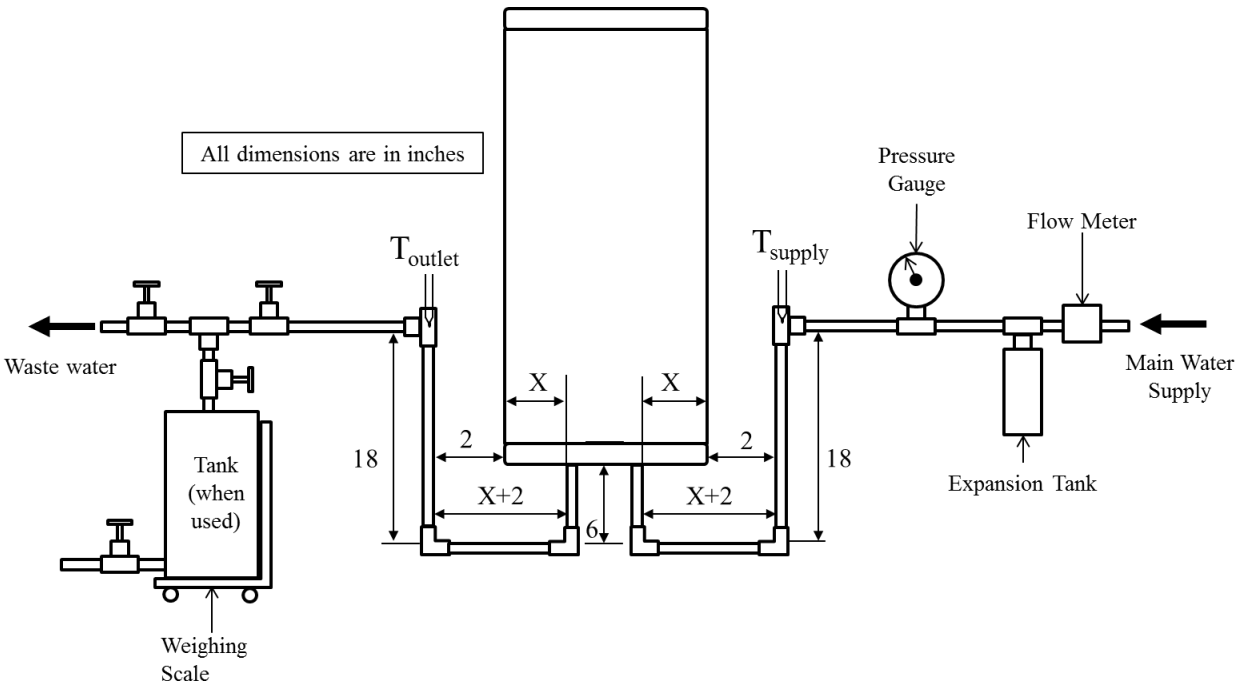

Figure 2. Set-up for thermal efficiency and standby loss test for storage water heaters, storage-type instantaneous water heaters, and unfired hot water storage tanks with vertical (bottom) connections

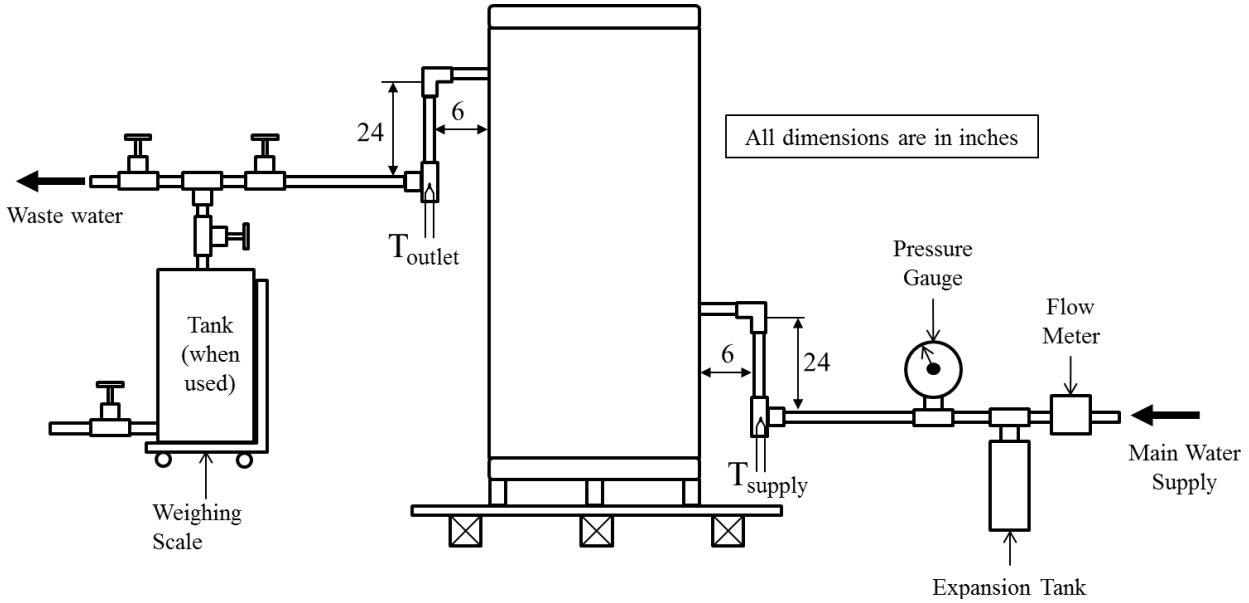

Figure 3. Set-up for thermal efficiency and standby loss test for storage water heaters, storage-type instantaneous water heaters, and unfired hot water storage tanks with horizontal connections

2.3. Thermocouples for Measurement of Mean Tank Temperature. For the standby loss test, install temperature-sensing means inside the tank for measurement of mean tank

temperature according to the instructions in section f of Annex E.1 of ANSI Z21.10.3-2015 (incorporated by reference; see §431.105). Calculate the mean tank temperature as the average of the six installed temperature-sensing means.

2.4. Piping Insulation. Insulate all water piping external to the water heater jacket, including heat traps and piping that are installed by the manufacturer or shipped with the unit, for at least 4 ft of piping length from the connection at the appliance with material having an R-value not less than 4 $°F \cdot ft^2 \cdot h/Btu$. Ensure that the insulation does not contact any appliance surface except at the location where the pipe connections penetrate the appliance jacket.

2.5. Temperature and Pressure Relief Valve Insulation. If the manufacturer has not provided a temperature and pressure relief valve, one shall be installed and insulated as specified in section 2.4 of this appendix.

2.6. Vent Requirements. Follow the requirements for venting arrangements specified in section c of Annex E.1 of ANSI Z21.10.3-2015 (incorporated by reference; see §431.105).

2.7. Energy Consumption. Install equipment that determines, within ± 1 percent:

2.7.1. The quantity and rate of fuel consumed.

2.7.2. The quantity of electricity consumed by factory-supplied water heater components, and of the test loop recirculating pump, if used.

3. Test Conditions

3.1. Water Supply. Follow the following provisions regarding the water supply to the water heater:

3.1.1. The pressure of the water supply must be maintained between 40 psi and the maximum pressure specified by the manufacturer of the unit being tested. If the maximum water pressure is not specified by the manufacturer in literature shipped with the unit or supplemental

test report instructions included with a certification report, then a default maximum value of 150 psi is to be used. The accuracy of the pressure-measuring devices must be ± 1.0 pounds per square inch (psi).

3.1.2. Isolate the water heater using a shutoff valve in the supply line with an expansion tank installed in the supply line downstream of the shutoff valve. There must be no shutoff means between the expansion tank and the appliance inlet.

3.1.3. During conduct of the thermal efficiency test, the temperature of the supply water must be maintained at 70 °F ± 2 °F.

3.2. Gas Supply Pressure for Gas-Fired Equipment. The outlet pressure of the gas appliance pressure regulator must be within the range specified by the manufacturer. If the allowable range of gas supply pressure is not specified by the manufacturer in literature shipped with the unit or supplemental test report instructions included with a certification report, then the outlet pressure of the gas appliance regulator must be within the default range of 4.5 inches water column (in. w.c.) to 10.5 in. w.c. for natural gas-powered units or 11 in. w.c. to 13 in. w.c. for propane-powered units. Obtain the higher heating value of the gas burned.

3.3. Ambient Room Temperature. While setting the tank thermostats and verifying steady-state operation (prior to the thermal efficiency test), between the first and second cut-outs prior to the standby loss test, and during the soak-in period, thermal efficiency test, and standby loss test, maintain the ambient room temperature at 75 °F ± 5 °F at all times. Measure the ambient room temperature at 30-second intervals during these periods. Measure the ambient room temperature at the vertical mid-point of the water heater and approximately 2 feet from the water heater jacket. Shield the sensor against radiation. Calculate the average ambient room

temperature separately for the soak-in period, thermal efficiency test, and standby loss test. During the soak-in period and thermal efficiency and standby loss tests, the ambient room temperature must not vary by more than ± 2.0 °F at any reading from the average ambient room temperature.

3.4. Test Air Temperature. While verifying steady-state operation (prior to the thermal efficiency test) and during the thermal efficiency and standby loss tests, the test air temperature must not vary by more than ± 5 °F from the ambient room temperature at any reading. Measure the test air temperature at 30-second intervals during these periods and at a location within two feet of the air inlet of the water heater. For units with multiple air inlets, measure the test air temperature at each air inlet, and maintain the specified tolerance on deviation from the ambient room temperature at each air inlet. For CWH equipment without a specific air inlet, measure the test air temperature within two feet of a location on the water heater where combustion air is drawn.

3.5. Ambient Humidity. While verifying steady-state operation (prior to the thermal efficiency test) and during the thermal efficiency and standby loss tests, maintain the ambient relative humidity of the test room at 60 percent ± 5 percent. Measure the ambient relative humidity at 30-second intervals during these periods. The ambient relative humidity must be measured at the same location as the test air temperature. For units with multiple air inlets, measure the ambient relative humidity at each air inlet, and maintain 60 percent ± 5 percent relative humidity at each air inlet.

3.6. Maximum Air Draft. During the soak-in period, thermal efficiency test, and standby loss test, the water heater must be located in an area protected from drafts of more than 50 ft/min from room ventilation registers, windows, or other external sources of air movement.

Prior to beginning the soak-in period, thermal efficiency test, and standby loss test, measure the air draft within three feet of the jacket of the water heater to ensure this condition is met. Ensure that no other changes that would increase the air draft are made to the test set up or conditions during the conduct of the tests.

3.7. Setting the Tank Thermostat. Before starting the required soak-in period, the thermostat setting must first be obtained by starting with the water in the system at 70 °F ± 2 °F. The thermostat must then be set so that the maximum outlet water temperature, after the thermostat reduces the fuel supply to a minimum, is 140 °F ± 5 °F.

3.8. Additional Requirements for Oil-Fired Equipment.

3.8.1. Venting Requirements. Connect a vertical length of flue pipe to the flue gas outlet of sufficient height so as to meet the minimum draft specified by the manufacturer.

3.8.2. Oil Supply. Adjust the burner rate so that the following conditions are met:

3.8.2.1. The CO_2 reading is within the range specified by the manufacturer;

3.8.2.2. The fuel pump pressure is within ± 10 percent of manufacturer's specifications;

3.8.2.3. If either the fuel pump pressure or range for CO_2 reading are not specified by the manufacturer in literature shipped with the unit or supplemental test report instructions included with a certification report, then a default value of 100 psig is to be used for fuel pump pressure, and a default range of 9-12 percent is to be used for CO_2 reading; and

3.8.2.4. Smoke in the flue does not exceed No. 1 smoke as measured by the procedure in ASTM D2156-09 (incorporated by reference, see §431.105). To determine the smoke spot number, connect the smoke measuring device to an open-ended tube. This tube must project into the flue ¼ to ½ of the pipe diameter.

3.8.2.5. For the thermal efficiency test, measure the CO_2 reading and determine the smoke spot number after steady-state operation has been obtained as determined by no variation of outlet water temperature in excess of 2 °F over a 3-minute period, but before beginning measurements for the thermal efficiency test. For the standby loss test, measure the CO_2 reading and determine the smoke spot number after the first cut-out before beginning measurements for the standby loss test. However, measurement of the CO_2 reading and conduct of the smoke spot test are not required prior to beginning an efficiency test (i.e., thermal efficiency or standby loss) if no settings on the water heater have been changed and the water heater has not been turned off since the end of a previously run efficiency test.

3.9. Data Collection Intervals. Follow the data recording intervals specified in the following sections.

3.9.1. Soak-In Period. Measure the air draft, in ft/min, before beginning the soak-in period. Measure the ambient room temperature, in °F, every 30 seconds during the soak-in period.

3.9.2. Thermal Efficiency Test. Follow the data recording intervals specified in Table 3.1 of this section.

Table 3.1 Data to be Recorded Before and During the Thermal Efficiency Test

Item Recorded	Before Test	Every 30 Seconds[1]	Every 10 Minutes
Gas outlet pressure, in w.c.	X		
Fuel higher heating value, Btu/ft^3 (gas) or Btu/lb (oil)	X		
Oil pump pressure, psig (oil only)	X		
CO_2 reading, % (oil only)	X[1]		
Oil smoke spot reading (oil only)	X[2]		
Air draft, ft/min	X		
Time, minutes/seconds		X	
Fuel weight or volume, lb (oil) or ft^3 (gas)			X[3]
Supply water temperature, °F		X	
Outlet water temperature, °F		X	
Ambient room temperature, °F		X	
Test air temperature, °F		X	
Ambient relative humidity, %		X	

Notes:
[1]These measurements are to be recorded at the start and end of the test, as well as every 30 seconds during the test.

[2]The smoke spot test and CO_2 reading are not required prior to beginning the thermal efficiency test if no settings on the water heater have been changed and the water heater has not been turned off since the end of a previously-run efficiency test (i.e., thermal efficiency or standby loss).

[3]Fuel and electricity consumption over the course of the entire test must be measured and used in calculation of thermal efficiency.

3.9.3. Standby Loss Test. Follow the data recording intervals specified in Table 3.2 of this section. Additionally, the fuel and electricity consumption over the course of the entire test must be measured and used in calculation of standby loss.

Table 3.2 Data to be Recorded Before and During the Standby Loss Test

Item Recorded	Before Test	Every 30 Seconds[1]
Gas outlet pressure, in w.c.	X	
Fuel higher heating value, Btu/ft^3 (gas) or Btu/lb (oil)	X	
Oil pump pressure, psig (oil only)	X	
CO_2 reading, % (oil only)	X[2]	
Oil smoke spot reading (oil only)	X[2]	
Air draft, ft/min	X	
Time, minutes/seconds		X
Mean tank temperature, °F		X
Ambient room temperature, °F		X
Test air temperature, °F		X
Ambient relative humidity, %		X

Notes:
[1]These measurements are to be recorded at the start and end of the test, as well as every 30 seconds during the test.

[2]The smoke spot test and CO_2 reading are not required prior to beginning the standby loss test if no settings on the water heater have been changed and the water heater has not been turned off since the end of a previously-run efficiency test (i.e., thermal efficiency or standby loss).

4. Determination of Storage Volume. Determine the storage volume by subtracting the tare weight – measured while the system is dry and empty – from the weight of the system when filled with water and dividing the resulting net weight of water by the density of water at the measured water temperature.

5. Soak-In Period. Prior to conducting a thermal efficiency test or standby loss test, a soak-in period must occur, in which the water heater must sit without any draws taking place for at least 12 hours. Begin the soak-in period after setting the tank thermostats as specified in

section 3.7 of this appendix, and maintain these settings throughout the soak-in period. However, a soak-in period is not required prior to beginning an efficiency test (i.e., thermal efficiency or standby loss) if no settings on the water heater have been changed and the water heater has not been turned off since the end of a previously run efficiency test.

6. Thermal Efficiency Test. Conduct the thermal efficiency test as specified in section j of Annex E.1 of ANSI Z21.10.3-2015 (incorporated by reference; see §431.105), with the exception of the provision stipulating the data collection intervals for water temperatures. Follow the additional provisions in the following sections:

6.1. Steady-State Conditions. Adjust the water flow rate to a constant value such that the following conditions are always satisfied during the test. Once steady-state operation is achieved, as determined by no variation of the outlet water temperature in excess of 2 °F over a 3-minute period, do not change any settings on the water heating equipment until measurements for the thermal efficiency test are finished.

6.1.1. The outlet water temperature must be maintained at 70 °F ± 2 °F above the supply water temperature.

6.1.2. The burner must fire continuously at full firing rate (i.e., no modulation or cut-outs) for the entire duration of the thermal efficiency test.

6.2. Determination of Fuel Input Rate. For the thermal efficiency test, record the fuel consumed at 10-minute intervals. Calculate the fuel input rate over each 10-minute period using the equations in section 6.3 of this appendix. The measured fuel input rates for these 10-minute periods must not vary by more than ± 2 percent between any two readings. Determine the

overall fuel input rate using the fuel consumption for the entire duration of the thermal efficiency test. Round the overall fuel input rate to the nearest 1,000 Btu/h.

6.3. Fuel Input Rate Calculation. To calculate the fuel input rate, use the following equations:

6.3.1. For gas-fired CWH equipment, calculate the fuel input rate using the following equation:

$$Q = \frac{Q_s * C_s * H_{gas}}{t}$$

Where,

Q = Fuel input rate, expressed in Btu/h

Q_s = Total fuel flow as metered, ft^3

C_s = Correction applied to the heating value of a gas H_{gas}, when it is metered at temperature and/or pressure conditions other than the standard conditions for which the value of H_{gas} is based

H_{gas} = Higher heating value of a gas, Btu/ft^3

t = Duration of measurement of fuel consumption

6.3.2. For oil-fired CWH equipment, calculate the fuel input rate using the following equation:

$$Q = \frac{Q_s * H_{oil}}{t}$$

Where,

Q = Fuel input rate, expressed in Btu/h

Q_s = Total weight of fuel, lb

H_{oil} = Higher heating value of oil, Btu/lb

t = Duration of measurement of fuel consumption

7. Standby Loss Test

7.1. Begin fuel flow to the main burner(s) and put the appliance into operation.

7.2. After the first cut-out, allow the water heater to remain in standby mode. At this point, do not change any settings on the water heating equipment until measurements for the standby loss test are finished.

7.3. At the second cut-out, record the time and ambient room temperature, and begin measuring the fuel and electric consumption. Record the initial mean tank temperature.

7.4. The duration of the test must be until the first cut-out that occurs after 24 hours or 48 hours, whichever comes first.

7.5. Immediately after conclusion of the test, record the total fuel flow and electrical energy consumption, the final ambient room temperature, the duration of the standby loss test, and the final mean tank temperature. Calculate the average of the recorded values of the mean tank temperature and of the ambient air temperatures taken at each measurement interval, including the initial and final values.

7.6. Standby Loss Calculation. To calculate the standby loss, follow the steps given below:

7.6.1. The standby loss expressed as a percentage (per hour) of the heat content of the stored water above room temperature must be calculated using the following equation for gas-fired equipment:

$$S = \frac{E_c + (C_s)(Q_s)(H) - \left(\frac{k(V_a)(\Delta T_4)}{E_t/100}\right)}{k(V_a)(\Delta T_3)(t)} \times 100\%$$

And using the following equation for oil-fired equipment:

$$S = \frac{E_c + (Q_s)(H) - \left(\frac{k(V_a)(\Delta T_4)}{E_t/100}\right)}{k(V_a)(\Delta T_3)(t)} \times 100\%$$

Where,

ΔT_3 = Average value of the mean tank temperature minus the average value of the ambient room temperature, expressed in °F

ΔT_4 = Final mean tank temperature measured at the end of the test minus the initial mean tank temperature measured at the start of the test , expressed in °F

k = 8.25 Btu/gallon·°F, the nominal specific heat of water

V_a = Volume of water contained in the water heater in gallons measured in accordance with section 4 of this appendix

E_t = Thermal efficiency of the water heater measured in accordance with this appendix, expressed in %

E_c = Electrical energy consumed by the water heater during the duration of the test in Btu

t = Total duration of the test in hours

C_s = Correction applied to the heating value of a gas H, when it is metered at

temperature and/or pressure conditions other than the standard conditions for which the value of H is based.

Q_s = Total fuel flow as metered, expressed in ft^3 (gas) or lb (oil)

H = Higher heating value of fuel, expressed in Btu/ft^3 (gas) or Btu/lb (oil)

S = Standby loss, the average hourly energy required to maintain the stored water temperature expressed as a percentage of the heat content of the stored water above room temperature

7.6.2. The standby loss expressed in Btu per hour must be calculated as follows: SL (Btu per hour) = S (% per hour) × 8.25 (Btu/gal-°F) × Measured Volume (gal) × 70 (°F).

13. Add appendix B to subpart G of part 431 to read as follows:

Appendix B to Subpart G of Part 431 – Uniform Test Method for the Measurement of Standby Loss of Electric Storage Water Heaters and Storage-Type Instantaneous Water Heaters

Note: Prior to (*date 360 days after date of publication of the test procedure final rule in the Federal Register*), manufacturers must make any representations with respect to the energy use or efficiency of the subject commercial water heating equipment in accordance with the results of testing pursuant to this appendix or the procedures in 10 CFR 431.106 that were in place on January 1, 2016. On and after (*date 360 days after date of publication of the test procedure final rule in the Federal Register*), manufacturers must make any representations with respect to energy use or efficiency of electric storage water heaters and storage-type instantaneous water

heaters in accordance with the results of testing pursuant to this appendix to demonstrate compliance with the energy conservation standards at 10 CFR 431.110.

1. General

Determine the standby loss in accordance with the following sections of this appendix. Certain sections reference sections of Annex E.1 of ANSI Z21.10.3-2015 (incorporated by reference; see §431.105). Where the instructions contained in the sections below conflict with instructions in Annex E.1 of ANSI Z21.10.3-2015, the instructions contained herein control.

2. Test Set-Up

2.1. Placement of Water Heater. A water heater for installation on combustible floors is to be placed on a ¾-inch plywood platform supported by three 2 x 4-inch runners. If the water heater is for installation on noncombustible floors, suitable noncombustible material is to be placed on the platform. When the use of the platform for a large water heater is not practical, the water heater may be placed on any suitable flooring. A wall-mounted water heater is to be mounted to a simulated wall section.

2.2. Heat Trap and Thermocouple Installation. Inlet and outlet piping must be turned vertically downward from the connections on a tank-type water heater so as to form heat traps. Thermocouples for measuring supply and outlet water temperatures must be installed upstream of the inlet heat trap piping and downstream of the outlet heat trap, respectively, in accordance with Figure 1, 2, or 3 (as applicable) presented in section 2.2 of appendix A to this subpart. The total vertical (upward and downward) piping between the thermocouples sensing location and the

connection port must be 24 inches. For water heaters with vertical connections, the 24 inches of total vertical piping length is divided into 6 inches of vertical piping upstream from the turn for the heat trap and 18 inches downstream from the turn for the heat trap. For water heaters that have vertical connections (top and bottom), the total horizontal piping between the connection port and the thermocouple sensing location must be equal to the distance between the water heater connection port and the edge of the water heater plus 2 inches. For water heaters that have horizontal connections, the total horizontal piping between the water heater connection port and the temperature sensing location, must be equal to 6 inches. The water heater must meet the requirements shown in either Figure 1, 2, or 3 (as applicable) at all times during the conduct of the standby loss test. Any factory-supplied heat traps must be installed per the installation instructions while ensuring the requirements in Figure 1, 2, or 3 are met. All dimensions specified in Figure 1, 2, and 3 and in this section are measured from the outer surface of the pipes and water heater outer casing (as applicable).

2.3. Thermocouples for Measurement of Mean Tank Temperature. Install temperature-sensing means inside the tank for measurement of mean tank temperature according to the instructions in section f of Annex E.1 of ANSI Z21.10.3-2015 (incorporated by reference; see §431.105). Calculate the mean tank temperature as the average of the six installed temperature-sensing means.

2.4. Piping Insulation. Insulate all water piping external to the water heater jacket, including heat traps and piping that are installed by the manufacturer or shipped with the unit, for at least 4 ft of piping length from the connection at the appliance with material having an R-value not less than 4 $°F \cdot ft^2 \cdot h/Btu$. Ensure that the insulation does not contact any appliance surface except at the location where the pipe connections penetrate the appliance jacket.

2.5. Temperature and Pressure Relief Valve Insulation. If the manufacturer has not provided a temperature and pressure relief valve, one shall be installed and insulated as specified in section 2.4 of this appendix.

2.6. Energy Consumption. Install equipment that determines, within ± 1 percent, the quantity of electricity consumed by factory-supplied water heater components, and of the test loop recirculating pump, if used.

3. Test Conditions

3.1. Water Supply. Follow the following provisions regarding the water supply to the water heater:

3.1.1. The pressure of the water supply must be maintained between 40 psi and the maximum pressure specified by the manufacturer of the unit being tested. If the maximum water pressure is not specified by the manufacturer in literature shipped with the unit or supplemental test report instructions included with a certification report, then a default maximum value of 150 psi is to be used. The accuracy of the pressure-measuring devices must be ± 1.0 pounds per square inch (psi).

3.1.2. Isolate the water heater using a shutoff valve in the supply line with an expansion tank installed in the supply line downstream of the shutoff valve. There must be no shutoff means between the expansion tank and the appliance inlet.

3.2. Electrical Supply. Maintain the electrical supply voltage to within ± 5 percent of the center of the voltage range specified on the water heater nameplate.

3.3. Ambient Room Temperature. While setting the tank thermostats, between the first and second cut-outs prior to the standby loss test, and during the soak-in period and standby loss test, maintain the ambient room temperature at 75 °F ± 5 °F at all times. Measure the ambient room temperature at 30-second intervals during these periods. Measure the ambient room temperature at the vertical mid-point of the water heater and approximately 2 feet from the water heater jacket. Shield the sensor against radiation. Calculate the average ambient room temperature separately for the soak-in period and the standby loss test. During the soak-in period and standby loss test, the room temperature must not vary more than ± 2.0 °F at any reading from the average ambient room temperature.

3.4. Maximum Air Draft. During the soak-in period and standby loss test, the water heater must be located in an area protected from drafts of more than 50 ft/min from room ventilation registers, windows, or other external sources of air movement. Prior to beginning the soak-in period and standby loss test, measure the air draft within three feet of the jacket of the water heater to ensure this condition is met. Ensure that no other changes that would increase the air draft are made to the test set up or conditions during the conduct of the tests.

3.5. Setting the Tank Thermostats. Before starting the required soak-in period, the thermostat setting(s) must first be obtained as explained in the following sections.

3.5.1. For water heaters with a single thermostat, the thermostat setting must be obtained by starting with the water in the system at 70 °F ± 2 °F. The thermostat must be set so that the maximum mean tank temperature after cut-out is 140 °F ± 5 °F.

3.5.2. For water heaters with multiple adjustable thermostats, set the topmost thermostat first to yield a maximum mean water temperature after cut-out of 140 °F ± 5 °F. Immediately

after setting the top thermostat, sequentially set the lower thermostat(s) from highest to lowest so that each yields a maximum mean water temperature after cut-out equal to 140 °F ± 5 °F. When setting each thermostat (with the exception of the bottommost thermostat), calculate the mean tank temperature using only the temperature readings measured at locations higher in the tank than the heating element corresponding to the thermostat being set. While setting each thermostat, all thermostats below the thermostat being tested must be turned off so that no elements below the thermostat being tested are in operation. When setting the bottommost thermostat, calculate the mean tank temperature using all tank thermocouples. After cut-out by all thermostats in the water heater, the maximum mean tank temperature must be 140 °F ± 5 °F.

3.6. Data Collection Intervals. Follow the data recording intervals specified in the following sections.

3.6.1. Soak-In Period. Measure the air draft, in ft/min, before beginning the soak-in period. Measure the ambient room temperature, in °F, every 30 seconds during the soak-in period.

3.6.2. Standby Loss Test. Follow the data recording intervals specified in Table 3.1 of this section. Additionally, the electricity consumption over the course of the entire test must be measured and used in calculation of standby loss.

Table 3.1 Data to be Recorded Before and During the Standby Loss Test

Item Recorded	Before Test	Every 30 Seconds[1]
Air draft, ft/min	X	
Time, minutes/seconds		X
Mean tank temperature, °F		X
Ambient room temperature, °F		X
Notes: [1]These measurements are to be recorded at the start and end of the test, as well as every 30 seconds during the test.		

4. Determination of Storage Volume. Determine the storage volume by subtracting the tare weight – measured while the system is dry and empty – from the weight of the system when filled with water and dividing the resulting net weight of water by the density of water at the measured water temperature.

5. Soak-In Period. Prior to conducting a standby loss test, a soak-in period must occur, in which the water heater must sit without any draws taking place for at least 12 hours. Begin the soak-in period after setting the tank thermostats as specified in section 3.5 of this appendix, and maintain these settings throughout the soak-in period.

6. Standby Loss Test

6.1. Initiate normal operation of the water heater.

6.2. After the first cut-out, allow the water heater to remain in standby mode. At this point, do not change any settings on the water heating equipment until measurements for the standby loss test are finished.

6.3. At the second cut-out, record the time and ambient room temperature, and begin measuring the electric consumption. Record the initial mean tank temperature.

6.4. The duration of the test must be until the first cut-out that occurs after 24 hours or 48 hours, whichever comes first.

6.5. Immediately after conclusion of the test, record the total electrical energy consumption, the final ambient room temperature, the duration of the standby loss test, and the final mean tank temperature. Calculate the average of the recorded values of the mean tank temperature and of the ambient air temperatures taken at each measurement interval, including the initial and final values.

6.6. Standby Loss Calculation. To calculate the standby loss, follow the steps given below:

6.6.1. The standby loss expressed as a percentage (per hour) of the heat content of the stored water above room temperature must be calculated using the following equation:

$$S = \frac{E_c - \left(\frac{k(V_a)(\Delta T_4)}{E_t/100}\right)}{k(V_a)(\Delta T_3)(t)} \times 100\%$$

Where,

ΔT_3 = Average value of the mean tank temperature minus the average value of the ambient room temperature, expressed in °F

ΔT_4 = Final mean tank temperature measured at the end of the test minus the initial mean tank temperature measured at the start of the test, expressed in °F

k = 8.25 Btu/gallon·°F, the nominal specific heat of water

V_a = Volume of water contained in the water heater in gallons measured in accordance with section 4 of this appendix

E_t = Thermal efficiency – assume 98 percent for electric water heaters with immersed heating elements

E_c = Electrical energy consumed by the water heater during the duration of the test in Btu

t = Total duration of the test in hours

S = Standby loss, the average hourly energy required to maintain the stored water temperature expressed as a percentage of the heat content of the stored water above room temperature

14. Add appendix C to subpart G of part 431 to read as follows:

Appendix C to Subpart G of Part 431 – Uniform Test Method for the Measurement of Thermal Efficiency and Standby Loss of Gas-Fired and Oil-Fired Instantaneous Water Heaters and Hot Water Supply Boilers (Other Than Flow-Activated Instantaneous Water Heaters and Storage-Type Instantaneous Water Heaters)

Note: Prior to (*date 360 days after date of publication of the test procedure final rule in the Federal Register*), manufacturers must make any representations with respect to the energy use or efficiency of the subject commercial water heating equipment in accordance with the results of testing pursuant to this appendix or the procedures in 10 CFR 431.106 that were in place on January 1, 2016. On and after (*date 360 days after date of publication of the test procedure final rule in the Federal Register*), manufacturers must make any representations with respect to energy use or efficiency of gas-fired and oil-fired instantaneous water heaters and hot water

supply boilers (other than flow-activated instantaneous water heaters and storage-type instantaneous water heaters) in accordance with the results of testing pursuant to this appendix to demonstrate compliance with the energy conservation standards at 10 CFR 431.110.

1. General

Determine the thermal efficiency and standby loss (as applicable) in accordance with the following sections of this appendix. Certain sections reference sections of Annex E.1 of ANSI Z21.10.3-2015 (incorporated by reference; see §431.105). Where the instructions contained in the sections below conflict with instructions in Annex E.1 of ANSI Z21.10.3-2015, the instructions contained herein control.

2. Test Set-Up

2.1. Placement of Water Heater. A water heater for installation on combustible floors is to be placed on a ¾-inch plywood platform supported by three 2 x 4-inch runners. If the water heater is for installation on noncombustible floors, suitable noncombustible material is to be placed on the platform. When the use of the platform for a large water heater is not practical, the water heater may be placed on any suitable flooring. A wall-mounted water heater is to be mounted to a simulated wall section.

2.2. Test Configuration. Set up the instantaneous water heater or hot water supply boiler in accordance with Figure 4 of this section.

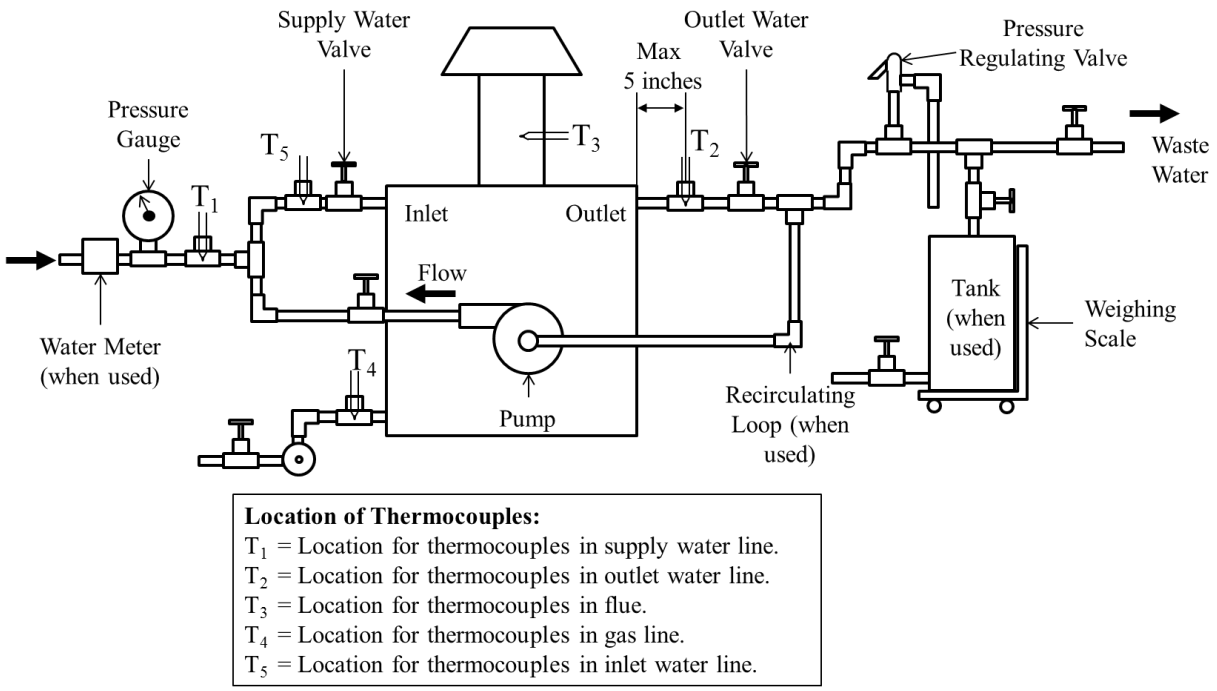

Figure 4. Set-up for thermal efficiency and standby loss test of instantaneous water heaters (other than storage-type instantaneous water heaters) and hot water supply boilers

2.2.1. If the instantaneous water heater or hot water supply boiler does not have any external piping, install a supply water valve within 5 inches of the water heater jacket, and install an outlet water valve within 10 inches of the water heater jacket. If the instantaneous water heater or hot water supply boiler includes external piping assembled at the manufacturer's premises prior to shipment, install water valves in the supply and outlet piping (as applicable) within 5 inches of the end of the piping supplied with the unit.

2.2.2. If the water heater is not able to achieve an outlet water temperature of 70 °F ± 2 °F above the supply water temperature at a constant maximum fuel input rate, a recirculating loop with pump as shown in Figure 4 in section 2.2 of this appendix must be used.

2.2.2.1. If a recirculating loop with a pump is used then ensure that the inlet water temperature labeled as T_5 in Figure 4 in section 2.2 of this appendix, is greater than or equal to

70 °F and less than or equal to 120 °F at all times during the thermal efficiency test and while achieving steady-state conditions prior to the standby loss test.

2.3. Installation of Temperature-Sensing Means. The temperature-sensing means must be installed in a manner such that the tip or the junction of the temperature sensing probe is in the water; less than or equal to 5 inches away from the outer casing of the equipment being tested; in the line of the central axis of the water pipe; and enclosed in a radiation protection shield. Figure 4 in section 2.2 of this appendix shows the placement of the outlet water temperature-sensing instrument at a maximum distance of 5 inches away from the surface of the jacket of the equipment being tested. For water heaters with multiple outlet water connections leaving the water heater jacket, temperature-sensing means must be installed for each outlet water connection leaving the water heater in accordance with the provisions in this section.

2.4. Piping Insulation. Insulate all water piping external to the water heater jacket, including piping that are installed by the manufacturer or shipped with the unit, for at least 4 ft of piping length from the connection at the appliance with material having an R-value not less than 4 $°F \cdot ft^2 \cdot h/Btu$. Ensure that the insulation does not contact any appliance surface except at the location where the pipe connections penetrate the appliance jacket.

2.5. Temperature and Pressure Relief Valve Insulation. If the manufacturer has not provided a temperature and pressure relief valve, one shall be installed and insulated as specified in section 2.4 of this appendix.

2.6. Vent Requirements. Follow the requirements for venting arrangements specified in section c of Annex E.1 of ANSI Z21.10.3-2015 (incorporated by reference; see §431.105).

2.7. Energy Consumption. Install equipment that determines, within ± 1 percent:

2.7.1. The quantity and rate of fuel consumed.

2.7.2. The quantity of electricity consumed by factory-supplied water heater components, and of the test loop recirculating pump, if used.

3. Test Conditions

3.1. Water Supply. Follow the following provisions regarding the water supply to the water heater:

3.1.1. The pressure of the water supply must be maintained between 40 psi and the maximum pressure specified by the manufacturer of the unit being tested. If the maximum water pressure is not specified by the manufacturer in literature shipped with the unit or supplemental test report instructions included with a certification report, then a default maximum value of 150 psi is to be used. The accuracy of the pressure-measuring devices must be ± 1.0 pounds per square inch (psi).

3.1.2. During conduct of the thermal efficiency test, the temperature of the supply water must be maintained at 70 °F ± 2 °F.

3.2. Gas Supply Pressure for Gas-Fired Equipment. The outlet pressure of the gas appliance pressure regulator must be within the range specified by the manufacturer. If the allowable range of gas supply pressure is not specified by the manufacturer in literature shipped with the unit or supplemental test report instructions included with a certification report, then the outlet pressure of the gas appliance regulator must be within the default range of 4.5 inches of water column (in. w.c.) to 10.5 in. w.c. for natural gas-powered units, or 11 in. w.c. to 13 in. w.c. for propane-powered units. Obtain the higher heating value of the gas burned.

3.3. Ambient Room Temperature. While verifying steady-state operation (prior to the thermal efficiency test), between the first and second cut-outs prior to the standby loss test (as applicable), and during the thermal efficiency and standby loss tests (as applicable), maintain the ambient room temperature at 75 °F ± 5 °F at all times. Measure the ambient room temperature at 30-second intervals during these periods. Measure the ambient room temperature at the vertical mid-point of the water heater and approximately 2 feet from the water heater jacket. Shield the sensor against radiation. Calculate the average ambient room temperature separately for the thermal efficiency and standby loss tests (as applicable). The ambient room temperature must not vary by more than ± 2.0 °F at any reading from the average ambient room temperature.

3.4. Test Air Temperature. While verifying steady-state operation (prior to the thermal efficiency test) and during the thermal efficiency and standby loss tests (as applicable), the test air temperature must not vary by more than ± 5 °F from the ambient room temperature at any reading. Measure the test air temperature at 30-second intervals during these periods and at a location within two feet of the air inlet of the water heater. For units with multiple air inlets, measure the test air temperature at each air inlet, and maintain the specified tolerance on deviation from the ambient room temperature at each air inlet. For CWH equipment without a specific air inlet, measure the test air temperature within two feet of a location on the water heater where combustion air is drawn.

3.5. Ambient Humidity. While verifying steady-state operation (prior to the thermal efficiency test) and during the thermal efficiency and standby loss tests (as applicable), maintain the ambient relative humidity of the test room at 60 percent ± 5 percent. Measure the ambient relative humidity at 30-second intervals during these periods. The ambient relative humidity must be measured at the same location as the test air temperature. For units with multiple air

inlets, measure the ambient relative humidity at each air inlet, and maintain 60 percent ± 5 percent relative humidity at each air inlet.

3.6. Maximum Air Draft. During the thermal efficiency and standby loss tests (as applicable), the water heater must be located in an area protected from drafts of more than 50 ft/min from room ventilation registers, windows, or other external sources of air movement. Prior to beginning the thermal efficiency and standby loss tests, measure the air draft within three feet of the jacket of the water heater to ensure this condition is met. Ensure that no other changes that would increase the air draft are made to the test set up or conditions during the conduct of the tests.

3.7. Setting the thermostat. Before beginning the thermal efficiency or standby loss tests, the thermostat setting must first be obtained by starting with the water in the system at 70 °F ± 2 °F. The thermostat must then be set so that the maximum outlet water temperature, after the thermostat reduces the fuel supply to a minimum, is 140 °F ± 5 °F.

3.8. Additional Conditions for Units with Multiple Water Connections. For units with multiple water connections leaving the water heater, use the following provisions:

3.8.1. The outlet water temperature measured from each connection leaving the water heater, must be maintained at 70 °F ± 2 °F above the supply water temperature, and must not differ from any other outlet water connection by more than 2 °F during the thermal efficiency test.

3.8.2. To calculate the outlet water temperature representative for the entire unit, calculate the average of the outlet water temperature measured at each connection leaving the

water heater jacket. This average must be taken for each reading recorded by the data acquisition unit. The outlet water temperature obtained for each reading must be used for carrying out all calculations for the thermal efficiency and standby loss tests.

3.9. Additional Requirements for Oil-Fired Equipment.

3.9.1. Venting Requirements. Connect a vertical length of flue pipe to the flue gas outlet of sufficient height so as to meet the minimum draft specified by the manufacturer.

3.9.2. Oil Supply. Adjust the burner rate so that the following conditions are met:

3.9.2.1. The CO_2 reading is within the range specified by the manufacturer;

3.9.2.2. The fuel pump pressure is within ± 10 percent of manufacturer's specifications;

3.9.2.3. If either the fuel pump pressure or range for CO_2 reading are not specified by the manufacturer in literature shipped with the unit or supplemental test report instructions included with a certification report, then a default value of 100 psig is to be used for fuel pump pressure, and a default range of 9-12 percent is to be used for CO_2 reading; and

3.9.2.4. Smoke in the flue does not exceed No. 1 smoke as measured by the procedure in ASTM D2156-09 (incorporated by reference, see §431.105). To determine the smoke spot number, the smoke measuring device shall be connected to an open-ended tube. This tube must project into the flue ¼ to ½ of the pipe diameter.

3.9.2.5. For the thermal efficiency test, measure the CO_2 reading and determine the smoke spot number after steady-state operation has been obtained as determined by no variation

of outlet water temperature in excess of 2 °F over a 3-minute period, but before beginning measurements for the thermal efficiency test. For the standby loss test, measure the CO_2 reading and determine the smoke spot number after the first cut-out before beginning measurements for the standby loss test. However, measurement of the CO_2 reading and conduct of the smoke spot test are not required prior to beginning an efficiency test (i.e., thermal efficiency or standby loss) if no settings on the water heater have been changed and the water heater has not been turned off since the end of a previously run efficiency test.

3.10. Data Collection Intervals. Follow the data recording intervals specified in the following sections.

3.10.1. Thermal Efficiency Test. Follow the data recording intervals specified in Table 3.1 of this section.

Table 3.1 Data to be Recorded Before and During the Thermal Efficiency Test

Item Recorded	Before Test	Every 30 Seconds[1]	Every 10 Minutes
Gas outlet pressure, in w.c.	X		
Fuel higher heating value, Btu/ft^3 (gas) or Btu/lb (oil)	X		
Oil pump pressure, psig (oil only)	X		
CO_2 reading, % (oil only)	X[2]		
Oil smoke spot reading (oil only)	X[2]		
Air draft, ft/min	X		
Time, minutes/seconds		X	
Fuel weight or volume, lb (oil) or ft^3 (gas)			X[3]
Supply water temperature, °F		X	
Outlet water temperature, °F		X	
Ambient room temperature, °F		X	
Test air temperature, °F		X	
Ambient relative humidity, %		X	

Notes:
[1]These measurements are to be recorded at the start and end of the test, as well as every 30 seconds during the test.

[2]The smoke spot test and CO_2 reading are not required prior to beginning the thermal efficiency test if no settings on the water heater have been changed and the water heater has not been turned off since the end of a previously-run efficiency test (i.e., thermal efficiency or standby loss).

[3]Fuel and electricity consumption over the course of the entire test must be measured and used in calculation of thermal efficiency.

3.10.2. Standby Loss Test. Follow the data recording intervals specified in Table 3.2 of this section. Additionally, the fuel and electricity consumption over the course of the entire test must be measured and used in calculation of standby loss.

Table 3.2 Data to be Recorded Before and During the Standby Loss Test

Item Recorded	Before Test	Every 30 Seconds[1]
Gas outlet pressure, in w.c.	X	
Fuel higher heating value, Btu/ft^3 (gas) or Btu/lb (oil)	X	
Oil pump pressure, psig (oil only)	X	
CO_2 reading, % (oil only)	X[2]	
Oil smoke spot reading (oil only)	X[2]	
Air draft, ft/min	X	
Time, minutes/seconds		X
Outlet water temperature, °F		X
Ambient room temperature, °F		X
Test air temperature, °F		X
Ambient relative humidity, %		X

Notes:
[1]These measurements are to be recorded at the start and end of the test, as well as every 30 seconds during the test.

[2]The smoke spot test and CO_2 reading are not required prior to beginning the thermal efficiency test if no settings on the water heater have been changed and the water heater has not been turned off since the end of a previously-run efficiency test (i.e., thermal efficiency or standby loss).

4. Determination of Storage Volume. Determine the storage volume by subtracting the tare weight – measured while the system is dry and empty – from the weight of the system when filled with water and dividing the resulting net weight of water by the density of water at the measured water temperature.

5. Thermal Efficiency Test. Conduct the thermal efficiency test as specified in section j of Annex E.1 of ANSI Z21.10.3-2015 (incorporated by reference; see §431.105), with the exception of the provision stipulating the data collection intervals for water temperatures. Follow the additional provisions in the following sections:

5.1. Steady-State Conditions. Adjust the water flow rate to a constant value such that the following conditions are always satisfied during the test. Once steady-state operation is achieved, as determined by no variation of the outlet water temperature in excess of 2 °F over a 3-minute period, do not change any settings on the water heating equipment until measurements for the thermal efficiency test are finished.

5.1.1. The outlet water temperature must be maintained at 70 °F ± 2 °F above the supply water temperature.

5.1.2. The burner must fire continuously at full firing rate (i.e., no modulation or cut-outs) for the entire duration of the thermal efficiency test.

5.2. Determination of Fuel Input Rate. For the thermal efficiency test, record the fuel consumption at 10-minute intervals. Calculate the fuel input rate for each 10-minute period using the equations in section 5.3 of this appendix. The measured fuel input rates for these 10-minute periods must not vary by more than ± 2 percent between any two readings. Determine the overall fuel input rate using the fuel consumption for the entire duration of the thermal efficiency test. Round the overall fuel input rate to the nearest 1,000 Btu/h.

5.3. Fuel Input Rate Calculation. To calculate the fuel input rate, use the following equations:

5.3.1. For gas-fired CWH equipment, calculate the fuel input rate using the following equation:

$$Q = \frac{Q_s * C_s * H_{gas}}{t}$$

Where,

Q = Fuel input rate, expressed in Btu/h

Q_s = Total fuel flow as metered, ft^3

C_s = Correction applied to the heating value of a gas H_{gas}, when it is metered at temperature and/or pressure conditions other than the standard conditions for which the value of H_{gas} is based

H_{gas} = Higher heating value of a gas, Btu/ft^3

t = Duration of measurement of fuel consumption

5.3.2. For oil-fired CWH equipment, calculate the fuel input rate using the following equation:

$$Q = \frac{Q_s * H_{oil}}{t}$$

Where,

Q = Fuel input rate, expressed in Btu/h

Q_s = Total weight of fuel, lb

H_{oil} = Higher heating value of oil, Btu/lb

t = Duration of measurement of fuel consumption

6. Standby Loss Test

6.1. Begin fuel flow to the main burner(s) and put the appliance into operation. Prior to beginning the standby loss test, the outlet water temperature must become constant, as indicated by no variation in excess of 2 °F over a 3-minute period, unless no settings on the water heater were changed and the water heater has not been turned off since the completion of the thermal efficiency test.

6.2. After ensuring the outlet water temperature is constant or if no settings on the water heater have been changed and the water heater has not been turned off since completion of the thermal efficiency test, turn off the supply water valve(s), the outlet water valve(s) (installed as per the provisions in section 2.2 of this appendix), and the water pump simultaneously and ensure that there is no flow of water through the water heater.

6.3. After the first cut-out, allow the water heater to remain in standby mode. At this point, do not change any settings on the water heating equipment until measurements for the standby loss test are finished.

6.4. At the second cut-out, record the time and ambient room temperature, and begin measuring the fuel and electric consumption. Record the initial outlet water temperature.

6.5. The duration of the test must be until the first cut-out that occurs after 24 hours or 48 hours, whichever comes first.

6.6. Immediately after conclusion of the test, record the total fuel flow and electrical energy consumption, the final ambient room temperature, the duration of the standby loss test, and the final outlet water temperature. Calculate the average of the recorded values of the outlet

water temperature and of the ambient air temperatures taken at each measurement interval, including the initial and final values.

6.7. Standby Loss Calculation. To calculate the standby loss, follow the steps given below:

6.7.1. The standby loss expressed as a percentage (per hour) of the heat content of the stored water above room temperature must be calculated using the following equation for gas-fired equipment:

$$S = \frac{E_c + (C_s)(Q_s)(H) - \left(\frac{k(V_a)(\Delta T_4)}{E_t/100}\right)}{k(V_a)(\Delta T_3)(t)} \times 100\%$$

And using the following equation for oil-fired equipment:

$$S = \frac{E_c + (Q_s)(H) - \left(\frac{k(V_a)(\Delta T_4)}{E_t/100}\right)}{k(V_a)(\Delta T_3)(t)} \times 100\%$$

Where,

ΔT_3 = Average value of the outlet water temperature minus the average value of the ambient room temperature, expressed in °F

ΔT_4 = Final outlet water temperature measured at the end of the test minus the initial outlet water temperature measured at the start of the test, expressed in °F

k = 8.25 Btu/gallon·°F, the nominal specific heat of water

V_a = Volume of water contained in the water heater in gallons measured in accordance with section 4 of this appendix

E_t = Thermal efficiency of the water heater measured in accordance with this appendix, expressed in %

E_c = Electrical energy consumed by the water heater during the duration of the test in Btu

t = Total duration of the test in hours

C_s = Correction applied to the heating value of a gas H, when it is metered at temperature and/or pressure conditions other than the standard conditions for which the value of H is based.

Q_s = Total fuel flow as metered, expressed in ft^3 (gas) or lb (oil)

H = Higher heating value of gas or oil, expressed in Btu/ft^3 (gas) or Btu/lb (oil)

S = Standby loss, the average hourly energy required to maintain the stored water temperature expressed as a percentage of the heat content of the stored water above room temperature

6.7.2. The standby loss expressed in Btu per hour must be calculated as follows: SL (Btu per hour) = S (% per hour) × 8.25 (Btu/gal-°F) × Measured Volume (gal) × 70 (°F).

15. Add appendix D to subpart G of part 431 to read as follows:

Appendix D to Subpart G of Part 431 – Uniform Test Method for the Measurement of Standby Loss of Electric Instantaneous Water Heaters (Other Than Flow-Activated Instantaneous Water Heaters and Storage-Type Instantaneous Water Heaters)

Note: Prior to (*date 360 days after date of publication of the test procedure final rule in the Federal Register*), manufacturers must make any representations with respect to the energy use or efficiency of the subject commercial water heating equipment in accordance with the results of testing pursuant to this appendix or the procedures in 10 CFR 431.106 that were in place on

January 1, 2016. On and after (*date 360 days after date of publication of the test procedure final rule in the Federal Register*), manufacturers must make any representations with respect to energy use or efficiency of electric instantaneous water heaters (other than flow-activated instantaneous water heaters and storage-type instantaneous water heaters) in accordance with the results of testing pursuant to this appendix to demonstrate compliance with the energy conservation standards at 10 CFR 431.110.

1. General

Determine the standby loss (as applicable) in accordance with the following sections of this appendix. Certain sections reference sections of Annex E.1 of ANSI Z21.10.3-2015 (incorporated by reference; see §431.105). Where the instructions contained in the sections below conflict with instructions in Annex E.1 of ANSI Z21.10.3-2015, the instructions contained herein control.

2. Test Set-Up

2.1. Placement of Water Heater. A water heater for installation on combustible floors is to be placed on a ¾-inch plywood platform supported by three 2 x 4-inch runners. If the water heater is for installation on noncombustible floors, suitable noncombustible material is to be placed on the platform. When the use of the platform for a large water heater is not practical, the water heater may be placed on any suitable flooring. A wall-mounted water heater is to be mounted to a simulated wall section.

2.2. Test Configuration. Set up the water heater in accordance with Figure 4 in section 2.2 of appendix C to this subpart.

2.2.1. If the instantaneous water heater or hot water supply boiler does not have any external piping, install a supply water valve within 5 inches of the water heater jacket, and install an outlet water valve within 10 inches of the water heater jacket. If the instantaneous water heater or hot water supply boiler includes external piping assembled at the manufacturer's premises prior to shipment, install water valves in the supply and outlet piping (as applicable) within 5 inches of the end of the piping supplied with the unit.

2.2.2. If the water heater is not able to achieve an outlet water temperature of 70 °F ± 2 °F above the supply water temperature at a constant maximum fuel (or electricity) input rate, a recirculating loop with pump as shown in Figure 4 in section 2.2 of appendix C to this subpart must be used.

2.2.2.1. If a recirculating loop with a pump is used then ensure that the inlet water temperature labeled as T_5 in Figure 4 in section 2.2 of appendix C to this subpart, is greater than or equal to 70 °F and less than or equal to 120 °F at all times while achieving steady-state conditions prior to the standby loss test.

2.3. Installation of Temperature-Sensing Means. The temperature-sensing means must be installed in a manner such that the tip or the junction of the temperature sensing probe is in the water; less than or equal to 5 inches away from the outer casing of the equipment being tested; in the line of the central axis of the water pipe; and enclosed in a radiation protection shield. Figure 4 in section 2.2 of appendix C to this subpart shows the placement of the outlet water temperature-sensing instrument at a maximum distance of 5 inches away from the surface

of the jacket of the equipment being tested. For water heaters with multiple outlet water connections leaving the water heater jacket, temperature-sensing means must be installed for each outlet water connection leaving the water heater in accordance with the provisions in this section.

2.4. Piping Insulation. Insulate all the water piping external to the water heater jacket, including piping that are installed by the manufacturer or shipped with the unit, for at least 4 ft of piping length from the connection at the appliance with material having an R-value not less than 4 $°F \cdot f^{t2} \cdot h/Btu$. Ensure that the insulation does not contact any appliance surface except at the location where the pipe connections penetrate the appliance jacket.

2.5. Temperature and Pressure Relief Valve Insulation. If the manufacturer has not provided a temperature and pressure relief valve, one shall be installed and insulated as specified in section 2.4 of this appendix.

2.6. Energy Consumption. Install equipment that determines, within ± 1 percent, the quantity of electricity consumed by factory-supplied water heater components, and of the test loop recirculating pump, if used.

3. Test Conditions

3.1. Water Supply. Follow the following provisions regarding the water supply to the water heater:

3.1.1. The pressure of the water supply must be maintained between 40 psi and the maximum pressure specified by the manufacturer of the unit being tested. If the maximum water pressure is not specified by the manufacturer in literature shipped with the unit or supplemental

test report instructions included with a certification report, then a default maximum value of 150 psi is to be used. The accuracy of the pressure-measuring devices must be ± 1.0 pounds per square inch (psi).

3.2. Electrical Supply. Maintain the electrical supply voltage to within ± 5 percent of the center of the voltage range specified on the water heater nameplate.

3.3. Ambient Room Temperature. Between the first and second cut-outs prior to the standby loss test and during the standby loss test, maintain the ambient room temperature at 75 °F ± 5 °F at all times. Measure the ambient room temperature at 30-second intervals during these periods. Measure the ambient room temperature at the vertical mid-point of the water heater and approximately 2 feet from the water heater jacket. Shield the sensor against radiation. Calculate the average ambient room temperature for the standby loss test. The ambient room temperature must not vary more than ± 2.0 °F at any reading from the average ambient room temperature.

3.4. Maximum Air Draft. During the standby loss test, the water heater must be located in an area protected from drafts of more than 50 ft/min from room ventilation registers, windows, or other external sources of air movement. Prior to beginning the standby loss test, measure the air draft within three feet of the jacket of the water heater to ensure this condition is met. Ensure that no other changes that would increase the air draft are made to the test set up or conditions during the conduct of the tests.

3.5. Setting the thermostat. Before beginning the standby loss test, the thermostat setting must first be obtained by starting with the water in the system at 70 °F ± 2 °F. While

setting the thermostat, ensure that all heating elements are constantly operating. The thermostat must then be set so that the maximum outlet water temperature after cut-out is 140 °F ± 5 °F.

3.6. Additional Conditions for Units with Multiple Outlet Water Connections. For units with multiple outlet water connections leaving the water heater, use the following provisions:

3.6.1. The outlet water temperature measured from each connection leaving the water heater prior to conducting the standby loss test must be maintained at 70 °F ± 2 °F above the supply water temperature, and must not differ from any other outlet water connection by more than 2 °F prior to starting the standby loss test.

3.6.2. To calculate the outlet water temperature representative for the entire unit, calculate the average of the outlet water temperature measured at each connection leaving the water heater jacket. This average must be taken for each reading recorded by the data acquisition unit. The outlet water temperature obtained for each reading must be used for carrying out all calculations for the standby loss test.

3.7. Data Collection Intervals. During the standby loss test, follow the data recording intervals specified in Table 3.1 of this section. Also, the electricity consumption over the course of the entire test must be measured and used in calculation of standby loss.

Table 3.1 Data to be Recorded Before and During the Standby Loss Test

Item Recorded	Before Test	Every 30 Seconds[1]
Air draft, ft/min	X	
Time, minutes/seconds		X
Outlet water temperature, °F		X

Item Recorded	Before Test	Every 30 Seconds[1]
Ambient room temperature, °F		X
Note: [1] These measurements are to be recorded at the start and end of the test, as well as every 30 seconds during the test.		

4. Determination of Storage Volume. Determine the storage volume by subtracting the tare weight – measured while the system is dry and empty – from the weight of the system when filled with water and dividing the resulting net weight of water by the density of water at the measured water temperature.

5. Standby Loss Test

5.1. Initiate normal operation of the water heater. Prior to beginning the standby loss test, the outlet water temperature must become constant, as indicated by no variation in excess of 2 °F over a 3-minute period.

5.2. After ensuring the outlet water temperature is constant, turn off the supply water valve(s), the outlet water valve(s) (installed as per the provisions in section 2.2 of this appendix), and the water pump simultaneously and ensure that there is no flow of water through the water heater.

5.3. After the first cut-out, allow the water heater to remain in standby mode. At this point, do not change any settings on the water heating equipment until measurements for the standby loss test are finished.

5.4. At the second cut-out, record the time and ambient room temperature, and begin measuring the electric consumption. Record the initial outlet water temperature.

5.5. The duration of the test must be until the first cut-out that occurs after 24 hours or 48 hours, whichever comes first.

5.6. Immediately after conclusion of the test, record the total electrical energy consumption, the final ambient room temperature, the duration of the standby loss test, and the final outlet water temperature. Calculate the average of the recorded values of the outlet water temperature and of the ambient air temperatures taken at each measurement interval, including the initial and final values.

5.7. Standby Loss Calculation. To calculate the standby loss, follow the steps given below:

5.7.1. The standby loss expressed as a percentage (per hour) of the heat content of the stored water above room temperature must be calculated using the following equation:

$$S = \frac{E_c - \left(\frac{k(V_a)(\Delta T_4)}{E_t/100}\right)}{k(V_a)(\Delta T_3)(t)} \times 100\%$$

Where,

ΔT_3 = Average value of the outlet water temperature minus the average value of the ambient room temperature, expressed in °F

ΔT_4 = Final outlet water temperature measured at the end of the test minus the initial outlet water temperature measured at the start of the test, expressed in °F

k = 8.25 Btu/gallon·°F, the nominal specific heat of water

V_a = Volume of water contained in the water heater in gallons measured in

accordance with section 4 of this appendix

E_t = Thermal efficiency – assume 98 percent for electric water heaters with immersed heating elements

E_c = Electrical energy consumed by the water heater during the duration of the test in Btu

t = Total duration of the test in hours

S = Standby loss, the average hourly energy required to maintain the stored water temperature expressed as a percentage of the heat content of the stored water above room temperature

16. Add appendix E to subpart G of part 431 to read as follows:

Appendix E to Subpart G of Part 431 – Uniform Test Method for the Measurement of Thermal Efficiency and Standby Loss of Flow-Activated Instantaneous Water Heaters

Note: Prior to (*date 360 days after date of publication of the test procedure final rule in the Federal Register*), manufacturers must make any representations with respect to the energy use or efficiency of the subject commercial water heating equipment in accordance with the results of testing pursuant to this appendix or the procedures in 10 CFR 431.106 that were in place on January 1, 2016. On and after (*date 30 days after date of publication of the test procedure final rule in the Federal Register*), manufacturers must make any representations with respect to energy use or efficiency of flow-activated instantaneous water heaters in accordance with the results of testing pursuant to this appendix to demonstrate compliance with the energy conservation standards at 10 CFR 431.110.

1. General

Determine the thermal efficiency and standby loss (as applicable) in accordance with the following sections of this appendix. Certain sections reference sections of Annex E.1 of ANSI Z21.10.3-2015 (incorporated by reference; see §431.105). Where the instructions contained in the sections below conflict with instructions in Annex E.1 of ANSI Z21.10.3-2015, the instructions contained herein control.

2. Test Set-Up

2.1. Placement of Water Heater. Place a water heater for installation on combustible floors on a ¾-inch plywood platform supported by three 2 x 4-inch runners. If the water heater is for installation on noncombustible floors, place suitable noncombustible material on the platform. When the use of the platform for a large water heater is not practical, the water heater may be placed on any suitable flooring. Mount a wall-mounted water heater to a simulated wall section.

2.2. Test Configuration. Set up the instantaneous water heater in accordance with Figure 4 in section 2.2 of appendix C to this subpart.

2.2.1. If the instantaneous water heater does not have any external piping, install a supply water valve within 5 inches of the water heater jacket, and install an outlet water valve within 10 inches of the water heater jacket. If the instantaneous water heater or hot water supply boiler includes external piping assembled at the manufacturer's premises prior to shipment, install water valves in the supply and outlet piping (as applicable) within 5 inches of the end of the piping supplied with the unit.

2.2.2. If the water heater is not able to achieve an outlet water temperature of 70 °F ± 2 °F above the supply water temperature at a constant maximum fuel input rate, a recirculating

loop with pump as shown in Figure 4 in appendix C to this subpart must be used for conducting the tests.

2.2.2.1. If a recirculating loop with a pump is used then ensure that the inlet water temperature labeled as T_5 in Figure 4 in section 2.2 of appendix C to this subpart, is greater than or equal to 70 °F and less than or equal to 120 °F at all times during the thermal efficiency test and while achieving steady-state conditions prior to the standby loss test.

2.3. Installation of Temperature-Sensing Means. The temperature-sensing means must be installed in a manner such that the tip or the junction of the temperature sensing probe is in the water; less than or equal to 5 inches away from the outer casing of the equipment being tested; in the line of the central axis of the water pipe; and enclosed in a radiation protection shield. Figure 4 in section 2.2 of appendix C to this subpart shows the placement of the outlet water temperature-sensing instrument at a maximum distance of 5 inches away from the surface of the jacket of the equipment being tested. For water heaters with multiple outlet water connections leaving the water heater jacket, temperature-sensing means must be installed for each outlet water connection leaving the water heater in accordance with the provisions in this section.

2.4. Piping Insulation. Insulate all water piping external to the water heater jacket, including piping that are installed by the manufacturer or shipped with the unit, for at least 4 ft of piping length from the connection at the appliance with material having an R-value not less than 4 $°F \cdot ft^2 \cdot h/Btu$. Ensure that the insulation does not contact any appliance surface except at the location where the pipe connections penetrate the appliance jacket.

2.5. Temperature and Pressure Relief Valve Insulation. If the manufacturer has not provided a temperature and pressure relief valve, one shall be installed and insulated as specified in section 2.4 of this appendix.

2.6. Vent Requirements. Follow the requirements for venting arrangements specified in section c of Annex E.1 of ANSI Z21.10.3-2015 (incorporated by reference; see §431.105).

2.7. Energy Consumption. Install equipment that determines, within ± 1 percent:

2.7.1. The quantity and rate of fuel consumed (for gas-fired and oil-fired equipment).

2.7.2. The quantity of electricity consumed by factory-supplied water heater components, and of the test loop recirculating pump, if used.

3. Test Conditions

3.1. Water Supply. Follow the following provisions regarding the water supply to the water heater:

3.1.1. The pressure of the water supply must be maintained between 40 psi and the maximum pressure specified by the manufacturer of the unit being tested. If the maximum water pressure is not specified by the manufacturer in literature shipped with the unit or supplemental test report instructions included with a certification report, then a default maximum value of 150 psi is to be used. The accuracy of the pressure-measuring devices must be ± 1.0 pounds per square inch (psi).

3.1.2. During conduct of the thermal efficiency test, the temperature of the supply water must be maintained at 70 °F ± 2 °F.

3.2. Gas Supply Pressure for Gas-Fired Equipment. The outlet pressure of the gas appliance pressure regulator must be within the range specified by the manufacturer. If the

allowable range of gas supply pressure is not specified by the manufacturer in literature shipped with the unit or supplemental test report instructions included with a certification report, then the outlet pressure of the gas appliance regulator must be within the default range of 4.5 inches water column (in. w.c.) to 10.5 in w.c. for natural gas-powered units or 11 in. w.c. to 13 in. w.c. for propane-powered units. Obtain the higher heating value of the gas burned.

3.3. Ambient Room Temperature. While verifying steady-state operation (prior to the thermal efficiency test) and during the thermal efficiency test and standby loss tests (as applicable), maintain the ambient room temperature at 75 °F ± 5 °F at all times. Measure the ambient room temperature at 30-second intervals during these periods. Measure the ambient room temperature at the vertical mid-point of the water heater and approximately 2 feet from the water heater jacket. Shield the sensor against radiation. Calculate the average ambient room temperature separately for the thermal efficiency and standby loss tests (as applicable). The ambient room temperature must not vary more than ± 2.0 °F at any reading from the average ambient room temperature.

3.4. Test Air Temperature. While verifying steady-state operation (prior to the thermal efficiency test) and during the thermal efficiency test, the test air temperature must not vary by more than ± 5 °F from the ambient room temperature at any reading. Measure the test air temperature at 30-second intervals during these periods and at a location within two feet of the air inlet of the water heater. For units with multiple air inlets, measure the test air temperature at each air inlet, and maintain the specified tolerance on deviation from the ambient room temperature at each air inlet. For CWH equipment without a specific air inlet, measure the test air temperature within two feet of a location on the water heater where combustion air is drawn.

3.5. Ambient Humidity. While verifying steady-state operation (prior to the thermal efficiency test) and during the thermal efficiency test, maintain the ambient relative humidity of the test room at 60 percent ± 5 percent during these periods. Measure the ambient relative humidity at 30-second intervals during conduct of the test(s). The ambient relative humidity must be measured at the same location as the test air temperature. For units that have multiple air inlets, measure the ambient relative humidity at each air inlet, and maintain 60 percent ± 5 percent relative humidity at each air inlet.

3.6. Maximum Air Draft. During the thermal efficiency and standby loss tests (as applicable), the water heater must be located in an area protected from drafts of more than 50 ft/min from room ventilation registers, windows, or other external sources of air movement. Prior to beginning the thermal efficiency and standby loss tests (as applicable), measure the air draft within three feet of the jacket of the water heater to ensure this condition is met. Ensure that no other changes that would increase the air draft are made to the test set up or conditions during the conduct of the tests.

3.7. Additional Conditions for Units with Multiple Outlet Water Connections. For units with multiple outlet water connections leaving the water heater, use the following provisions:

3.7.1. The outlet water temperature measured from each connection leaving the water heater must be maintained at 70 °F ± 2 °F above the supply water temperature and must not differ from any other outlet water connection by more than 2 °F during the thermal efficiency test.

3.7.2. To calculate the outlet water temperature representative for the entire unit, calculate the average of the outlet water temperature measured at each connection leaving the water heater jacket. This average must be taken for each reading recorded by the data acquisition unit. The outlet water temperature obtained for each reading must be used for carrying out all calculations for the thermal efficiency and standby loss tests.

3.8. Additional Requirements for Oil-Fired Equipment.

3.8.1. Venting Requirements. Connect a vertical length of flue pipe to the flue gas outlet of sufficient height so as to meet the minimum draft specified by the manufacturer.

3.8.2. Oil Supply. Adjust the burner rate so that the following conditions are met:

3.8.2.1. The CO_2 reading is within the range specified by the manufacturer;

3.8.2.2. The fuel pump pressure is within ± 10 percent of manufacturer's specifications;

3.8.2.3. If either the fuel pump pressure or range for CO_2 reading are not specified by the manufacturer in literature shipped with the unit or supplemental test report instructions included with a certification report, then a default value of 100 psig is to be used for fuel pump pressure, and a default range of 9-12 percent is to be used for CO_2 reading; and

3.8.2.4. Smoke in the flue does not exceed No. 1 smoke as measured by the procedure in ASTM D2156-09 (incorporated by reference, see §431.105). To determine the smoke spot number, the smoke measuring device shall be connected to an open-ended tube. This tube must project into the flue ¼ to ½ of the pipe diameter.

3.8.2.5. For the thermal efficiency test, measure the CO_2 reading and determine the smoke spot number after steady-state operation has been obtained as determined by no variation of outlet water temperature in excess of 2 °F over a 3-minute period, but before beginning measurements for the thermal efficiency test. However, measurement of the CO_2 reading and conduct of the smoke spot test are not required prior to beginning the thermal efficiency test if no settings on the water heater have been changed and the water heater has not been turned off since the end of a previously run thermal efficiency test.

3.9. Data Collection Intervals. Follow the data recording intervals specified in the following sections.

3.9.1. Thermal Efficiency Test. Follow the data recording intervals specified in Table 3.1 for gas-fired and oil-fired CWH equipment.

Table 3.1 Data to be Recorded Before and During the Thermal Efficiency Test

Item Recorded	Before Test	Every 30 Seconds[1]	Every 10 Minutes
Gas outlet pressure, in w.c.	X		
Fuel higher heating value, Btu/ft^3 (gas) or Btu/lb (oil)	X		
Oil pump pressure, psig (oil only)	X		
CO_2 reading, % (oil only)	X[2]		
Oil smoke spot reading (oil only)	X[2]		
Air draft, ft/min	X		
Time, minutes/seconds		X	
Fuel weight or volume, lb (oil) or ft^3 (gas)			X[3]
Supply water temperature, °F		X	
Outlet water temperature, °F		X	
Ambient room temperature, °F		X	
Test air temperature, °F		X	
Ambient relative humidity, %		X	

Notes:
[1]These measurements are to be recorded at the start and end of the test, as well as every 30 seconds during the test.

[2]The smoke spot test and CO_2 reading are not required prior to beginning the thermal efficiency test if no settings on the water heater have been changed and the water heater has not been turned off since the end of a previously-run thermal efficiency test.

[3]Fuel and electricity consumption over the course of the entire test must be measured and used in calculation of thermal efficiency.

3.9.2. Standby Loss Test. Follow the data recording intervals specified in Table 3.2 of this section. Additionally, the fuel and electricity consumption must be measured over the course of the entire test and used in calculation of standby loss.

Table 3.2 Data to be Recorded Before and During the Standby Loss Test

Item Recorded	Before Test	Every 30 Seconds[1]
Air draft, ft/min	X	
Time, minutes/seconds		X
Outlet water temperature, °F		X
Ambient room temperature, °F		X
Note: [1]These measurements are to be recorded at the start and end of the test, as well as every 30 seconds during the test.		

4. Determination of Storage Volume. Determine the storage volume by subtracting the tare weight – measured while the system is dry and empty – from the weight of the system when filled with water and dividing the resulting net weight of water by the density of water at the measured water temperature.

5. Thermal Efficiency Test. For gas-fired and oil-fired CWH equipment, conduct the thermal efficiency test as specified in section j of Annex E.1 of ANSI Z21.10.3-2015 (incorporated by reference; see §431.105), with the exception of the provision stipulating the data collection intervals for water temperatures. Additionally, follow the provisions in the following sections:

5.1. Steady-State Conditions. Adjust the water flow rate to a constant value such that the following conditions are always satisfied during the test. Once steady-state operation is achieved, as determined by no variation of the outlet water temperature in excess of 2 °F over a 3-minute period, do not change any settings on the water heating equipment until measurements for the thermal efficiency test are finished.

5.1.1. The outlet water temperature must be maintained at 70 °F ± 2 °F above the supply water temperature.

5.1.2. The burner must fire continuously at full firing rate (i.e., no modulation or cut-outs) for the entire duration of the thermal efficiency test.

5.2. Determination of Fuel Input Rate. For the thermal efficiency test, record the fuel consumption at 10-minute intervals. Calculate the fuel input rate for each 10-minute period using the equations in section 5.3 of this appendix. The measured fuel input rates for these 10-minute periods must not vary by more than ± 2 percent between any two readings. Determine the overall fuel input rate using the fuel consumption for the entire duration of the thermal efficiency test. Round the overall fuel input rate to the nearest 1,000 Btu/h.

5.3. Fuel Input Rate Calculation. To calculate the fuel input rate, use the following equations:

5.3.1. For gas-fired CWH equipment, calculate the fuel input rate using the following equation:

$$Q = \frac{Q_s * C_s * H_{gas}}{t}$$

Where,

Q = Fuel input rate, expressed in Btu/h

Q_s = Total fuel flow as metered, ft^3

C_s = Correction applied to the heating value of a gas H_{gas}, when it is metered at temperature and/or pressure conditions other than the standard conditions for

which the value of H_{gas} is based

H_{gas} = Higher heating value of a gas, Btu/ft^3

t = Duration of measurement of fuel consumption

5.3.2. For oil-fired CWH equipment, calculate the fuel input rate using the following equation:

$$Q = \frac{Q_s * H_{oil}}{t}$$

Where,

Q = Fuel input rate, expressed in Btu/h

Q_s = Total weight of fuel, lb

H_{oil} = Higher heating value of a gas, Btu/lb

t = Duration of measurement of fuel consumption

6. Standby Loss Test

6.1. Initiate normal operation of the water heater. Prior to beginning the standby loss test, unless no settings on the water heater were changed and the water heater has not been turned off since the completion of the thermal efficiency test, achieve steady-state conditions for the outlet water temperature using the following provisions: set the supply water temperature to 70 °F ± 2 °F. Adjust the water flow rate to attain an outlet water temperature of 70 °F ± 2 °F above the supply water temperature. Once the outlet water temperature is achieved, maintain the flow rate such to ensure that the outlet water temperature does not vary in excess of 2 °F over a 3-minute period.

6.2. After ensuring the outlet water temperature is constant or if no settings on the water heater have been changed and the water heater has not been turned off since completion of the thermal efficiency test, turn off the supply water valve(s) and the outlet water valve(s) (installed as per the provisions in section 2.2 of this appendix), and the water pump simultaneously and ensure that there is no flow of water through the water heater. Allow the water heater to cut out. After the burner or heating element cuts out, start recording the measurements for the standby loss test.

6.3. At this time, record the time as t=0 and record the initial outlet water temperature, ambient room temperature, and fuel and electricity meter readings. Continue to monitor and record the outlet water temperature, the time elapsed from the start of the test, and the electricity consumption at 30-second intervals using a data acquisition system.

6.4. Stop the test when one of the following occurs:

(1) The outlet water temperature decreases by 35 °F from the initial outlet temperature within 24 hours from the start of the test, or

(2) 24 hours has elapsed from the start of the test.

Record the final outlet water temperature, fuel consumed, electricity consumed, and the time elapsed from the start of the test.

6.5. Once the test is complete, use the applicable equation to calculate the standby loss in percent per hour:

For gas-fired equipment:

$$S = \frac{\frac{k(V_a)(\Delta T_1)}{E_t/100} + E_c + (C_s)(Q_s)(H)}{k(V_a)(\Delta T_2)(t)} \times 100$$

For oil-fired equipment:

$$S = \frac{\frac{k(V_a)(\Delta T_1)}{E_t/100} + E_c + (Q_s)(H)}{k(V_a)(\Delta T_2)(t)} \times 100$$

For electric equipment:

$$S = \frac{\frac{k(V_a)(\Delta T_1)}{E_t/100} + E_c}{k(V_a)(\Delta T_2)(t)} \times 100$$

Where,

ΔT_1 = Outlet water temperature measured at the start of the test minus outlet water temperature measured at the end of the test, expressed in °F

ΔT_2 = Outlet water temperature at the start of the test minus the ambient room temperature at the start of the test, expressed in °F

k = 8.25 Btu/(gallon·°F), the nominal specific heat of water

V_a = Volume of water contained in the water heater in gallons measured in accordance with section 4 of this appendix

E_t = Thermal efficiency of the water heater measured in accordance with this appendix for gas-fired and oil-fired water heaters. For electric water heaters with immersed heating elements use 98 percent.

E_c = Electrical energy consumed by the water heater during the duration of the test in Btu

t = Total duration of the test in hours

C_s = Correction applied to the heating value of a gas H, when it is metered at temperature and/or pressure conditions other than the standard conditions upon which the value of H is based.

Q_s = Total fuel flow as metered, expressed in ft^3 (gas) or lb (oil)

H = Higher heating value of gas or oil, expressed in Btu/ft^3 (gas) or Btu/lb (oil)

S = Standby loss, the average hourly energy required to maintain the stored water temperature expressed as a percentage of the initial heat content of the stored water above room temperature

6.6. For gas-fired and oil-fired flow-activated instantaneous water heaters, calculate the standby loss in terms of Btu per hour as follows:

SL (Btu per hour) = S (% per hour) × 8.25 (Btu/gal-°F) × Measured Volume (gal) × 70 (°F)

Where, SL refers to the standby loss of the water heater, defined as the amount of energy required to maintain the stored water temperature expressed in Btu per hour.

17. Add appendix F to subpart G of part 431 to read as follows:

Appendix F to Subpart G of Part 431 – Uniform Test Method for the Measurement of Energy Efficiency of Commercial Heat Pump Water Heaters

Note: On and after (*date 360 days after date of publication of the test procedure final rule in the Federal Register*), manufacturers must make any representations with respect to energy use or efficiency of commercial heat pump water heaters in accordance with the results of testing pursuant to this appendix.

1. General. Determine the COP_h for CHPWHs using the test procedure set forth below. Certain sections below reference ASHRAE 118.1-2012 (incorporated by reference; see §431.105). Where the instructions contained below differ from those contained in ASHRAE 118.1-2012, the sections below control.

2. Definitions and Symbols. The definitions and symbols are as listed in section 3 of ASHRAE 118.1-2012.

3. Instrumentation. The instruments required for the test are as described in section 6 of ASHRAE 118.1-2012.

4. Test Set-Up. Follow the provisions described in this section to install the CHPWH for testing.

4.1. Test set-up and installation instructions

4.1.1. For air-source CHPWHs, set up the unit for testing as per section 7.1 and Figure 5a in section 7.7.1 of ASHRAE 118.1-2012.

4.1.2. For direct geo-exchange CHPWHs, set up the unit for testing as per section 7.1 and Figure 5b in section 7.7.2 of ASHRAE 118.1-2012.

4.1.3. For indoor water-source and ground water-source CHPWHs, set up the unit for testing as per section 7.1 and Figure 5c in section 7.7.3 of ASHRAE 118.1-2012.

4.2. Use the water piping instructions described in section 7.2 of ASHRAE 118.1-2012 and the special instructions described in section 7.7.6 of ASHRAE 118.1-2012. Insulate all the pipes used for connections with material having a thermal resistance of not less than 4 $h \cdot °F \cdot ft^2/Btu$ for a total piping length of not less than 4 feet from the water heater connection ports.

4.3. Install the thermocouples, including the room thermocouples, as per the instructions in sections 7.3.2 and 7.3.3 of ASHRAE 118.1-2012.

4.4. Section 7.6 of ASHRAE 118.1-2012 must be used if the manufacturer neither submits nor specifies a water pump applicable for the unit for laboratory testing.

4.5. Install the temperature sensors at the locations specified in Figure 5a, 5b, or 5c as applicable as per section 4.1 of this appendix. The sensor shall be installed in such a manner that the sensing portion of the device is positioned within the water flow and as close as possible to the center line of the pipe. Follow the instructions provided in sections 7.7.7.1 and 7.7.7.2 of ASHRAE 118.1-2012 to install the temperature and flow-sensing instruments.

4.6. Use the following evaporator side rating conditions as applicable for each category of CHPWHs. These conditions are also mentioned in Table 4 of this appendix:

4.6.1. For air-source CHPWHs, maintain the evaporator air entering dry-bulb temperature at 80.6 °F ± 1 °F and wet-bulb temperature at 71.2 °F ± 1 °F throughout the conduct of the test.

4.6.2. For direct geo-exchange CHPWHs, maintain the evaporator refrigerant temperature at 32 °F ± 1 °F.

4.6.3. For indoor water-source CHPWHs, maintain the evaporator entering water temperature at 68°F ± 1 °F.

4.6.4. For ground water-source CHPWHs, maintain the evaporator entering water temperature at 50°F ± 1 °F.

4.7. The CHPWH being tested must be installed as per the instructions specified in sections 4.1 to 4.6 (as applicable) of this appendix. For all other installation requirements, use section 7.7.4 of ASHRAE 118.1-2012 to resolve any issues related to installation (other than what is specified in this test procedure) of the equipment for testing. Do not make any alterations to the equipment except as specified in this appendix for installation, testing, and the attachment of required test apparatus and instruments.

4.8. Use Table 3 of ASHRAE 118.1-2012 for measurement tolerances of various parameters.

4.9. If the CHPWH is equipped with a thermostat that is used to control the throttling valve of the equipment then use the provisions in section 7.7.7.3 of ASHRAE 118.1-2012 to set up the thermostat.

5. Test Procedure

Test all CHPWHs as per the provisions described in ASHRAE 118.1-2012 for "Type IV" equipment. Tests for all CHPWH equipment must follow the steps described below.

5.1. Supply the CHPWH unit with electricity at the voltage specified by the manufacturer. Follow the provisions in section 8.2.1 of ASHRAE 118.1-2012 to maintain the electricity supply at the required level.

5.2. Set the condenser supply water temperature and outlet water temperature per the following provisions and as set forth in Table 5.1 of this section:

Table 5.1. Evaporator and Condenser Side Rating Conditions

Category of CHPWH	Evaporator side rating conditions	Condenser side rating conditions
Air-source commercial heat pump water heater	Evaporator entering air conditions: Dry bulb: 80.6 °F ± 1 °F Wet bulb: 71.2 °F ± 1 °F	Entering water temperature: 70 °F ± 1 °F. Vary water flow rate (if needed) to achieve the outlet water temperature as specified in section 8.7.2 of ASHRAE 118.1-2012. If the required outlet water temperature as specified in section 8.7.2 of ASHRAE 118.1-2012 is not met even after varying the flow rate, then change the condenser entering water temperature to 110 °F ± 1 °F. Vary flow rate to achieve the conditions in section 8.7.2 of ASHRAE 118.1-2012.
Direct geo-exchange commercial heat pump water heater	Evaporator refrigerant temperature: 32 °F ± 1 °F	Entering water temperature: 110 °F ± 1 °F
Indoor water-source commercial heat pump water heater	Evaporator entering water temperature: 68 °F ± 1 °F	Entering water temperature: 110 °F ± 1 °F
Ground water-source commercial heat pump water heater	Evaporator entering water temperature: 50 °F ± 1 °F	Entering water temperature: 110 °F ± 1 °F

5.2.1. For air-source CHPWHs:

5.2.1.1. Set the supply water temperature to 70 °F ± 1 °F.

5.2.1.2. Initiate operation at the rated pump flow rate and measure the outlet water temperature. If the outlet water temperature is maintained at 120 °F ± 5 °F with no variation in excess of 2 °F over a three-minute period, as required by section 8.7.2 of ASHRAE 118.1-2012, skip to section 5.3 of this appendix.

5.2.1.3. If the outlet water temperature condition as specified in section 8.7.2 of ASHRAE 118.1-2012 is not achieved, adjust the water flow rate over the range of the pump's capacity. If, after varying the water flow rate, the outlet water temperature is maintained at 120 °F ± 5 °F with no variation in excess of 2 °F over a three-minute period, as required by section 8.7.2 of ASHRAE 118.1-2012, skip to section 5.3 of this appendix.

5.2.1.4. If, after adjusting the water flow rate within the range that is achievable by the pump, the outlet water temperature condition as specified in section 8.7.2 of ASHRAE 118.1-2012 is still not achieved, then change the supply water temperature to 110 °F ± 1 °F and repeat the instructions from sections 5.2.1.2 and 5.2.1.3 of this appendix.

5.2.1.5. If the outlet water temperature condition cannot be met, then a test procedure waiver is necessary to specify an alternative set of test conditions.

5.2.2. For direct geo-exchange, indoor water-source, and ground water-source CHPWHs use the following steps:

5.2.2.1. Set the condenser supply water temperature to 110 °F ± 1 °F.

5.2.2.2. Follow the steps specified in section 8.7.2 of ASHRAE 118.1-2012 to obtain an outlet water temperature of 120 °F ± 5 °F with no variation in excess of 2 °F over a three-minute period.

5.3. Conduct the test as per section 9.1.1, "Full Input Rating," of ASHRAE 118.1-2012. The flow rate, "FR," referred to in section 9.1.1 of ASHRAE 118.1-2012 is the flow rate of water through the CHPWH expressed in gallons per minute obtained after following the steps in section 5.2 of this appendix. Use the evaporator side rating conditions specified in section 4.6 of this appendix to conduct the test as per section 9.1.1 of ASHRAE 118.1-2012.

5.4. Calculate the COP_h of the CHPWH according to section 10.3.1 of the ASHRAE 118.1-2012 for the "Full Capacity Test Method."

18. Add appendix G to subpart G of part 431 to read as follows:

Appendix G to Subpart G of Part 431 – Uniform Test Method for the Measurement of Energy Efficiency of Unfired Hot Water Storage Tanks

Note: On and after (*date 360 days after date of publication of the test procedure final rule in the Federal Register*), manufacturers must make any representations with respect to energy use or efficiency of unfired hot water storage tanks in accordance with the results of testing pursuant to this appendix.

1. General

Determine the standby loss in accordance with the following sections of this appendix. Certain sections reference sections of GAMA Testing Standard IWH-TS-1 (incorporated by reference; see §431.105). Where the instructions contained in the sections below conflict with instructions in GAMA IWH-TS-1, the instructions contained herein control.

2. Test Set-Up. Set up the unfired hot water storage tank for testing in accordance with sections 4, 5 (except for section 5.5), 6.0, and 6.1 of GAMA IWH-TS-1.

2.1. Piping Insulation. Insulate all water piping external to the water heater jacket, including heat traps and piping that are installed by the manufacturer or shipped with the unit, for at least 4 ft of piping length from the connection at the appliance with material having an R-value not less than 4 $°F \cdot ft^2 \cdot h/Btu$. Ensure that the insulation does not contact any appliance surface except at the location where the pipe connections penetrate the appliance jacket.

3. Test Conditions

3.1. Water Supply. Follow the following provisions regarding the water supply to the water heater:

3.1.1. The pressure of the water supply must be maintained between 40 psi and the maximum pressure specified by the manufacturer of the unit being tested. If the maximum water pressure is not specified by the manufacturer in literature shipped with the unit or supplemental test report instructions included with a certification report, then a default maximum value of 150 psi is to be used. The accuracy of the pressure-measuring devices must be ± 1.0 pounds per square inch (psi).

3.2. Ambient Room Temperature. During the soak-in period and standby loss test, maintain the ambient room temperature at 75 °F ± 5 °F at all times. Measure the ambient room temperature at 30-second intervals during these periods. Measure the average ambient room temperature separately for the soak-in period and standby loss test. During the soak-in period and standby loss test, the measured room temperature must not vary more than ± 2.0 °F at any reading from the average ambient room temperature.

3.3. Maximum Air Draft. During the soak-in period and standby loss test, the storage tank must be located in an area protected from drafts of more than 50 ft/min from room ventilation registers, windows, or other external sources of air movement. Prior to beginning the soak-in period and standby loss test, measure the air draft within three feet of the jacket of the water heater to ensure this condition is met. Ensure that no other changes that would increase the air draft are made to the test set up or conditions during conduct of the test.

3.4. Data Collection Intervals. Follow the data recording intervals specified in the following sections.

3.4.1. Soak-In period. Measure the air draft, in ft/min, before beginning the soak-in period. Measure the ambient room temperature, in °F, every 30 seconds during the soak-in period.

3.4.2. Standby Loss Test. Follow the data recording intervals specified in Table 3.1 of this section.

Table 3.1 Data to be Recorded Before and During the Standby Loss Test

Item Recorded	Before Test	Every 30 Seconds[1]
Air draft, ft/min	X	
Time, minutes/seconds		X
Mean tank temperature, °F		X
Ambient room temperature, °F		X
Notes: [1]These measurements are to be recorded at the start and end of the test, as well as every 30 seconds during the test.		

4. Determination of Storage Volume. Determine the storage volume by subtracting the tare weight – measured while the system is dry and empty – from the weight of the system when filled with water and dividing the resulting net weight of water by the density of water at the measured water temperature.

5. Soak-In Period. Prior to conducting a standby loss test, a soak-in period must occur, in which the tank must sit without any draws taking place for at least 12 hours. Begin the soak-in period after filling the tank with water such that a mean tank temperature of 145 °F ± 5 °F is achieved.

6. Standby Loss Test

6.1. After conduct of the soak-in period but prior to the start of the standby loss test, fill the storage tank with water that is heated sufficiently to achieve a mean tank temperature of at least 145 °F.

6.2. When the mean tank temperature falls to 142 °F, start recording mean tank temperature and ambient room temperature at regular 30-second intervals as the tank temperature decays.

6.3. When the mean tank temperature falls below 138 °F, stop the test and record the final mean tank temperature reading.

6.4. Calculate the standby loss in Btu per hour as follows:

6.4.1. Select the data points starting when the mean tank temperature first falls to 142 °F and ending when the mean tank temperature first falls below 138 °F. Calculate the uncorrected decay rate, DR_u in °F/h, by a least squares method as given by:

$$DR_u = \frac{n\sum x_i T_i - (\sum x_i)(\sum T_i)}{n\sum(x_i^2) - (\sum x_i)^2}$$

Where:

n = Number of data points collected;

x_i = Elapsed time of each data point from the start of the decay period when the tank first achieves a mean temperature of 142 °F (hours);

T_i = Mean tank temperature in °F measured at each 30-second interval during the decay period between the time when the mean tank temperature first falls to 142 °F and when the mean tank temperature drops below 138 °F.

6.4.2. Calculate the mean tank water temperature decay rate, DR, in °F/h, as follows:

$$DR = DR_u \times \frac{140\ °F - 75\ °F}{140\ °F - T_a}$$

Where T_a is the average ambient room temperature during the test, °F.

6.4.3. The standby loss, SL, in Btu per hour, for unfired hot water storage tanks is determined as:

$$SL = DR \times V \times \rho \times C_p$$

Where:

V = tank volume expressed in gallons, measured in accordance with section 2.4 of this appendix

ρ = 8.205 pounds per gallon, density of water at 140 °F

C_p = 0.999 Btu per pound-mass·°F, specific heat of water at 140 °F.

[FR Doc. 2016-09539 Filed: 5/6/2016 8:45 am; Publication Date: 5/9/2016]