This document is scheduled to be published in the
Federal Register on 12/17/2014 and available online at
http://federalregister.gov/a/2014-28674, and on FDsys.gov

6560-50-P

ENVIRONMENTAL PROTECTION AGENCY

40 CFR Parts 50, 51, 52, 53, and 58

[EPA-HQ-OAR-2008-0699; FRL-9918-43-OAR]

RIN 2060-AP38

National Ambient Air Quality Standards for Ozone

AGENCY: Environmental Protection Agency.

ACTION: Proposed rule.

SUMMARY: Based on its review of the air quality criteria for ozone (O_3) and related photochemical oxidants and national ambient air quality standards (NAAQS) for O_3, the Environmental Protection Agency (EPA) proposes to make revisions to the primary and secondary NAAQS for O_3 to provide requisite protection of public health and welfare, respectively. The EPA is proposing to revise the primary standard to a level within the range of 0.065 to 0.070 parts per million (ppm), and to revise the secondary standard to within the range of 0.065 to 0.070 ppm, which air quality analyses indicate would provide air quality, in terms of 3-year average W126 index values, at or below a range of 13-17 ppm-hours. The EPA proposes to make corresponding revisions in data handling conventions for O_3 and conforming changes to the Air Quality Index (AQI); to revise regulations for the prevention of significant deterioration (PSD) program to add a transition provision for certain applications; and to propose schedules and convey information related to implementing any revised standards. The EPA is proposing changes to the O_3 monitoring seasons, the Federal Reference Method

(FRM) for monitoring O_3 in the ambient air, Federal Equivalent Method (FEM) procedures for testing, and the Photochemical Assessment Monitoring Stations (PAMS) network.

Along with proposing exceptional event schedules related to implementing any revised O_3 standards, the EPA is proposing to apply this same schedule approach to other future revised NAAQS and to remove obsolete regulatory language for expired exceptional event deadlines. The EPA is proposing to make minor changes to the procedures and time periods for evaluating potential FRMs and equivalent methods (including making the requirements for nitrogen dioxide consistent with the requirements for O_3) and to remove an obsolete requirement for the annual submission of documentation by manufacturers of certain particulate matter monitors. For additional information, see the Executive Summary, section I.A.

DATES: Written comments on this proposed rule must be received by **[INSERT 90 DAYS AFTER DATE OF PUBLICATION IN THE FEDERAL REGISTER]**.

Public Hearings: The EPA intends to hold three public hearings on this proposed rule in January 2015. These will be announced in a separate **Federal Register** notice that provides details, including specific dates, times, addresses, and contact information for these hearings.

ADDRESSES: Submit your comments, identified by Docket ID No. EPA-HQ-OAR-2008-0699, to the EPA by one of the following methods:

- Federal eRulemaking Portal: http://www.regulations.gov. Follow the online instructions for submitting comments.
- Email: A-and-R-Docket@epa.gov. Include docket ID No. EPA-HQ-OAR-2008-0699 in the subject line of the message.
- Fax: (202) 566-9744.
- Mail: Environmental Protection Agency, EPA Docket Center (EPA/DC), Mailcode

28221T, Attention Docket ID No. OAR-2008-0699, 1200 Pennsylvania Ave., NW, Washington, DC 20460. Please include a total of two copies.

- Hand/Courier Delivery: EPA Docket Center, Room 3334, EPA WJC West Building, 1301 Constitution Ave., NW, Washington, DC. Such deliveries are only accepted during the Docket's normal hours of operation, and special arrangements should be made for deliveries of boxed information.

Instructions: Direct your comments to Docket ID No. EPA-HQ-OAR-2008-0699. The EPA's policy is that all comments received will be included in the public docket without change and may be made available online at www.regulations.gov, including any personal information provided, unless the comment includes information claimed to be Confidential Business Information (CBI) or other information whose disclosure is restricted by statute. Do not submit information that you consider to be CBI or otherwise protected through www.regulations.gov or e-mail. The www.regulations.gov website is an "anonymous access" system, which means the EPA will not know your identity or contact information unless you provide it in the body of your comment. If you send an e-mail comment directly to the EPA without going through www.regulations.gov your e-mail address will be automatically captured and included as part of the comment that is placed in the public docket and made available on the Internet. If you submit an electronic comment, the EPA recommends that you include your name and other contact information in the body of your comment and with any disk or CD-ROM you submit. If the EPA cannot read your comment due to technical difficulties and cannot contact you for clarification, the EPA may not be able to consider your comment. Electronic files should avoid the use of special characters, any form of encryption, and be free of any defects or viruses. For additional

information about EPA's public docket visit the EPA Docket Center homepage at http://www.epa.gov/epahome/dockets.htm.

Docket: The EPA has established dockets for these actions as discussed above. All documents in these dockets are listed on the www.regulations.gov website. This includes documents in the rulemaking docket (Docket ID No. EPA-HQ-OAR-2008-0699) and a separate docket, established for the Integrated Science Assessment (ISA) (Docket No. EPA-HQ-ORD-2011-0050) that has have been incorporated by reference into the rulemaking docket. Although listed in the index, some information is not publicly available, e.g., CBI or other information whose disclosure is restricted by statute. Certain other material, such as copyrighted material, is not placed on the Internet and may be viewed, with prior arrangement, at the EPA Docket Center. Publicly available docket materials are available either electronically in www.regulations.gov or in hard copy at the Air and Radiation Docket and Information Center, EPA/DC, EPA WJC West Building, Room 3334, 1301 Constitution Ave., NW, Washington, DC. The Public Reading Room is open from 8:30 a.m. to 4:30 p.m., Monday through Friday, excluding legal holidays. The telephone number for the Public Reading Room is (202) 566-1744 and the telephone number for the Air and Radiation Docket and Information Center is (202) 566-1742. For additional information about EPA's public docket visit the EPA Docket Center homepage at: http://www.epa.gov/epahome/dockets.htm.

FOR FURTHER INFORMATION CONTACT: Ms. Susan Lyon Stone, Health and Environmental Impacts Division, Office of Air Quality Planning and Standards, U.S. Environmental Protection Agency, Mail code C504-06, Research Triangle Park, NC 27711; telephone: (919) 541-1146; fax: (919) 541-0237; email: stone.susan@epa.gov.

SUPPLEMENTARY INFORMATION:

General Information

What should I consider as I prepare my comments for EPA?

1. Submitting CBI. Do not submit this information to the EPA through www.regulations.gov or e-mail. Clearly mark the part or all of the information that you claim to be CBI. For CBI information in a disk or CD ROM that you mail to EPA, mark the outside of the disk or CD ROM as CBI and then identify electronically within the disk or CD ROM the specific information that is claimed as CBI. In addition to one complete version of the comment that includes information claimed as CBI, a copy of the comment that does not contain the information claimed as CBI must be submitted for inclusion in the public docket. Information so marked will not be disclosed except in accordance with procedures set forth in 40 CFR part 2.

2. Tips for Preparing Your Comments. When submitting comments, remember to:

- Identify the rulemaking by docket number and other identifying information (subject heading, Federal Register date and page number).
- Follow directions – The agency may ask you to respond to specific questions or organize comments by referencing a Code of Federal Regulations (CFR) part or section number.
- Explain why you agree or disagree, suggest alternatives, and substitute language for your requested changes.
- Describe any assumptions and provide any technical information and/or data that you used.
- Provide specific examples to illustrate your concerns, and suggest alternatives.
- Explain your views as clearly as possible, avoiding the use of profanity or personal threats.
- Make sure to submit your comments by the comment period deadline identified.

Availability of Related Information

A number of documents relevant to this rulemaking are available on EPA Web sites. The ISA for Ozone and Related Photochemical Oxidants is available on the EPA's National Center for Environmental Assessment (NCEA) Web site. To obtain this document, go to http://www.epa.gov/ncea, and click on Ozone in the Quick Finder section. This will open a page with a link to the February 2013 ISA. The 2014 Policy Assessment (PA), Health and Welfare Risk and Exposure Assessments (HREA and WREA, respectively), and other related technical documents are available on EPA's Office of Air Quality Planning and Standards (OAQPS) Technology Transfer Network (TTN) Web site. The final 2014 PA is available at: http://www.epa.gov/ttn/naaqs/standards/ozone/s_o3_2008_pa.html, and the final 2014 Health and Welfare Risk and Exposure Assessments and other related technical documents are available at: http://www.epa.gov/ttn/naaqs/standards/ozone/s_o3_2008_rea.html. These and other related documents are also available for inspection and copying in the EPA docket identified above.

Environmental Justice

Analyses evaluating the potential implications of a revised O_3 NAAQS for environmental justice populations are discussed in appendix 9A of the Regulatory Impact Analysis (RIA) that accompanies this notice of proposed rulemaking. The RIA is available on the Web, through the EPA's Technology Transfer Network website at http://www.epa.gov/ttn/naaqs/standards/ozone/s_o3_index.html.

Table of Contents

The following topics are discussed in this preamble:

I. Background
- A. Executive Summary
- B. Legislative Requirements
- C. Related Control Programs to Implement O_3 Standards
- D. Review of Air Quality Criteria and Standards for O_3

E. Ozone Air Quality
II. Rationale for Proposed Decision on the Primary Standard
A. Approach
B. Health Effects Information
1. Overview of Mechanisms
2. Nature of Effects
3. Adversity of O_3 Effects
4. Ozone-Related Impacts on Public Health
C. Human Exposure and Health Risk Assessments
1. Air Quality Adjustment
2. Exposure Assessment
3. Quantitative Health Risk Assessments
D. Conclusions on the Adequacy of the Current Primary Standard
1. Summary of Evidence-Based Considerations in the PA
2. Summary of Exposure- and Risk-Based Considerations in the PA
3. Policy Assessment Conclusions on the Current Standard
4. CASAC Advice
5. Administrator's Proposed Conclusions Concerning the Adequacy of the Current Standard
E. Conclusions on the Elements of the Primary Standard
1. Indicator
2. Averaging Time
3. Form
4. Level
F. Proposed Decision on the Primary Standard
III. Communication of Public Health Information
IV. Rationale for Proposed Decision on the Secondary Standard
A. Approach
B. Welfare Effects Information
1. Nature of Effects and Biologically Relevant Exposure Metric
2. Potential Impacts on Public Welfare
C. Exposure and Risk Assessment Information
1. Air Quality Analyses
2. Tree Seedling Growth, Productivity, Carbon Storage and Associated Ecosystem Services
3. Crop Yield
4. Visible Foliar Injury
D. Conclusions on Adequacy of the Current Secondary Standard
1. Evidence- and Exposure/Risk-Based Considerations in the Policy Assessment
2. CASAC Advice
3. Administrator's Proposed Conclusions on Adequacy of the Current Standard
E. Consideration of Alternative Secondary Standards
1. Indicator
2. Consideration of a Cumulative, Seasonal Exposure-based Standard in the Policy Assessment
3. CASAC Advice

4. Air Quality Analyses
5. Administrator's Proposed Conclusions
F. Proposed Decision on the Secondary Standard
V. Appendix U: Interpretation of the Primary and Secondary NAAQS for O_3
A. Background
B. Data Selection Requirements
C. Data Reporting and Data Handling Requirements
D. Considerations for the Possibility of a Distinct Secondary Standard
E. Exceptional Events Information Submission Schedule
VI. Ambient Monitoring Related to Proposed O_3 Standards
A. Background
B. Revisions to the Length of the Required O_3 Monitoring Seasons
C. Revisions to the Photochemical Assessment Monitoring Stations (PAMS)
1. Network Design
2. Speciated VOC Measurements
3. Carbonyl Sampling
4. Nitrogen Oxides Sampling
5. Meteorology Measurements
6. PAMS Season
7. Timing and Other Implementation Issues
D. Addition of a New Federal Reference Method (FRM) for O_3
E. Revisions to the Procedures for Testing Performance Characteristics and Determining Comparability Between Candidate Methods and Reference Methods
VII. Implementation of Proposed O_3 Standards
A. NAAQS Implementation Plans
1. Background
2. Timing of Rules and Guidance
3. Section 110 State Implementation Plans
4. Nonattainment Area Requirements
B. Implementing a Distinct Secondary O_3 NAAQS, if One is Established
C. Designation of Areas
D. Prevention of Significant Deterioration and Nonattainment New Source Review Programs for the Proposed Revised Primary and Secondary O_3 NAAQS
1. Prevention of Significant Deterioration (PSD)
2. Nonattainment New Source Review
E. Transportation and General Conformity Programs
1. What are Transportation and General Conformity?
2. Why is the EPA Discussing Transportation and General Conformity in this Proposed Rulemaking?
3. When Would Transportation and General Conformity Apply to Areas Designated Nonattainment for a Revised O_3 NAAQS, if One is Established?
4. Will Transportation and General Conformity Apply to a Distinct Secondary O_3 NAAQS, if One is Established?
5. What Impact Would the Implementation of a Revised O_3 NAAQS Have on a State's Transportation and/or General Conformity SIP?
F. How Background O_3 Is Addressed in CAA Implementation Provisions

1. Introduction
2. Exceptional Events Exclusions
3. Rural Transport Areas
4. International Transport
VIII. Statutory and Executive Order Reviews
A. Executive Order 12866: Regulatory Planning and Review and Executive Order 13563: Improving Regulation and Regulatory Review
B. Paperwork Reduction Act
C. Regulatory Flexibility Act
D. Unfunded Mandates Reform Act
E. Executive Order 13132: Federalism
F. Executive Order 13175: Consultation and Coordination with Indian Tribal Governments
G. Executive Order 13045: Protection of Children from Environmental Health & Safety Risks
H. Executive Order 13211: Actions that Significantly Affect Energy Supply, Distribution, or Use
I. National Technology Transfer and Advancement Act
J. Executive Order 12898: Federal Actions to Address Environmental Justice in Minority Populations and Low-Income Populations

References

I. Background

A. Executive Summary

This section summarizes information about the purpose of this regulatory action (I.A.1), the major provisions of this proposal (I.A.2), and provisions related to implementation (I.A.3).

1. Purpose of This Regulatory Action

Sections 108 and 109 of the Clean Air Act (CAA) govern the establishment, review, and revision, as appropriate, of the NAAQS to protect public health and welfare. The CAA requires the EPA to periodically review the air quality criteria—the science upon which the standards are based—and the standards themselves. This rulemaking is being conducted pursuant to these statutory requirements. The schedule for completing this review is established by a federal court order, which requires that the EPA sign a proposal by December 1, 2014, and make a final determination by October 1, 2015.

The EPA completed its most recent review of the O_3 NAAQS in 2008. As a result of that review, EPA took four principal actions: (1) revised the level of the 8-hour primary O_3 standard to 0.075 parts per million (ppm); (2) expressed the standard to three decimal places; (3) revised the 8-hour secondary O_3 standard by making it identical to the revised primary standard; and (4) made conforming changes to the AQI for O_3.

In subsequent litigation, the U.S. Court of Appeals for the District of Columbia Circuit upheld the EPA's 2008 primary O_3 standard, but remanded the 2008 secondary standard. *State of Mississippi v. EPA*, 744 F. 3d 1334 (D.C. Cir. 2013). With respect to the primary standard, the court held that the EPA reasonably determined that the existing primary standard, set in 1997, did not protect public health with an adequate margin of safety and required revision. In upholding the EPA's revised primary standard, the court dismissed arguments that the EPA should have adopted a more stringent standard. The court remanded the secondary standard to the EPA after rejecting the EPA's explanation for setting the secondary standard identical to the revised 8-hour primary standard. The court held that because the EPA had failed to identify a level of air quality requisite to protect public welfare, the EPA's comparison between the primary and secondary standards for determining if requisite protection for public welfare was afforded by the primary standard failed to comply with the CAA.

This proposal reflects the Administrator's proposed conclusions based on a review of the O_3 NAAQS that began in September 2008. In conducting this review, the EPA has carefully evaluated the currently available scientific literature on the health and welfare effects of ozone, focusing particularly on the new literature available since the conclusion of the previous review in 2008. In addition, the EPA has also addressed the remand of the Agency's 2008 decision on the secondary standard. Between 2008 and 2014, the EPA prepared draft and final versions of

the Integrated Science Assessment, the Health and Welfare Risk and Exposure Assessments, and the Policy Assessment. Multiple drafts of these documents were available for public review and comment, and as required by the CAA, were peer-reviewed by the Clean Air Scientific Advisory Committee (CASAC), an independent scientific advisory committee established by the CAA and charged with providing advice to the Administrator. The final documents reflect the EPA staff's consideration of the comments and recommendations made by CASAC and the public on draft versions of these documents.

2. Summary of Major Provisions

The EPA is proposing that the current primary O_3 standard set at a level of 0.075 ppm is not requisite to protect public health with an adequate margin of safety, and that it should be revised to provide increased public health protection. Specifically, the EPA is proposing to retain the indicator (ozone), averaging time (8-hour) and form (annual fourth-highest daily maximum, averaged over 3 years) of the existing primary O_3 standard and is proposing to revise the level of that standard to within the range of 0.065 ppm to 0.070 ppm. The EPA is proposing this revision to increase public health protection, including for "at-risk" populations such as children, older adults, and people with asthma or other lung diseases, against an array of O_3-related adverse health effects. For short-term O_3 exposures, these effects include decreased lung function, increased respiratory symptoms and pulmonary inflammation, effects that result in serious indicators of respiratory morbidity such as emergency department visits and hospital admissions, and all-cause (total nonaccidental) mortality. For long-term O_3 exposures, these health effects include a variety of respiratory morbidity effects and respiratory mortality. Recognizing that the CASAC recommended a range of levels from 0.060 ppm to 0.070 ppm, and that levels as low as 0.060 ppm could potentially be supported, the Administrator solicits comment on alternative

standard levels below 0.065 ppm, and as low as 0.060 ppm. However, the Administrator notes that setting a standard below 0.065 ppm, down to 0.060 ppm, would inappropriately place very little weight on the uncertainties in the health effects evidence and exposure/risk information. Given alternative views of the currently available evidence and information expressed by some commenters, the EPA is taking comment on both the Administrator's proposed decision to revise the current primary O_3 standard and the option of retaining that standard.

In addition to proposing changes to the level of the standard, the EPA is proposing conforming changes to the Air Quality Index (AQI) by proposing to set an AQI value of 100 equal to the level of the 8-hour primary O_3 standard, and proposing adjustments to the AQI values of 50, 150, 200 and 300.

The EPA also proposes to revise the secondary standard to provide increased protection against vegetation-related effects on public welfare. As an initial matter, the Administrator proposes to conclude that air quality in terms of a three-year average seasonal W126 index value, based on the three consecutive month period within the O_3 season with the maximum index value, with daily exposures cumulated for the 12-hour period from 8:00 am to 8:00 pm, within the range from 13 ppm-hrs to 17 ppm-hrs would provide the requisite protection against known or anticipated adverse effects to the public welfare. The EPA solicits comment on this proposed conclusion. In considering how to achieve that level of air quality, the Administrator recognizes that air quality data analyses suggest that air quality in terms of three-year average W126 index values of a range at or below 13 to 17 ppm-hrs would be provided by a secondary standard level within the range of 0.065 to 0.070 ppm, and that to the extent areas need to take action to attain a standard in the range of 0.065 to 0.070 ppm, those actions would also improve air quality as measured by the W126 metric. Thus, the Administrator proposes to revise the level of the current

secondary standard to within the range of 0.065 to 0.070 ppm. The EPA solicits comments on this proposed revision of the secondary standard.

The EPA also solicits comments on the alternative approach of revising the secondary standard to a W126-based form, averaged over three years, with a level within the range of 13 ppm-hrs to 17 ppm-hrs. The EPA additionally solicits comments on such a distinct secondary standard with a level within the range extending below 13 ppm-hrs down to 7 ppm-hrs. Further, the EPA solicits comments on retaining the current secondary standard without revision, along with the alternative views of the evidence that would support retaining the current standard.

3. Provisions Related to Implementation

As directed by the CAA, reducing pollution to meet national air quality standards always has been a shared task, one involving the federal government, states, tribes and local air agencies. This partnership has proved effective since the EPA first issued O_3 standards more than three decades ago, and is evidenced by significantly lower O_3 levels throughout the country. To provide a foundation that helps air agencies build successful strategies for attaining new O_3 standards, the EPA will continue to move forward with federal regulatory programs, such as the proposed Clean Power Plan and the final Tier 3 motor vehicle emissions standards. To facilitate the development of CAA-compliant implementation plans and strategies to attain new standards, the EPA intends to issue timely and appropriate implementation guidance and, where appropriate and consistent with the law, new rulemakings to streamline regulatory burdens and provide flexibility in implementation. In addition, given the regional nature of O_3 air pollution, the EPA will continue to work with states to address interstate transport of O_3 and O_3 precursors.

This notice contains several proposed provisions related to implementation of the proposed standards. In addition to revisions to the primary and secondary NAAQS, the EPA is

proposing to make corresponding revisions in data handling conventions for O_3; to revise regulations for the Prevention of Significant Deterioration (PSD) permitting program to add a provision grandfathering certain pending permits from certain requirements with respect to the proposed revisions to the O_3 NAAQS; and to convey schedules and information related to implementing any revised standards.

In conjunction with proposing exceptional event schedules related to implementing any revised O_3 standards, the EPA is also proposing to extend the new schedule approach to other future revised NAAQS and to remove obsolete regulatory language associated with expired exceptional event deadlines for historical standards for both O_3 and other NAAQS pollutants. The EPA is also proposing to make minor changes to the procedures and time periods for evaluating potential FRMs and equivalent methods, including making the requirements for nitrogen dioxide consistent with the requirements for O_3, and removing an obsolete requirement for the annual submission of documentation by manufacturers of certain particulate matter monitors.

B. Legislative Requirements

Two sections of the CAA govern the establishment and revision of the NAAQS. Section 108 (42 U.S.C. section 7408) directs the Administrator to identify and list certain air pollutants and then to issue air quality criteria for those pollutants. The Administrator is to list those air pollutants that in her "judgment, cause or contribute to air pollution which may reasonably be anticipated to endanger public health or welfare;" "the presence of which in the ambient air results from numerous or diverse mobile or stationary sources;" and "for which . . . [the Administrator] plans to issue air quality criteria…." Air quality criteria are intended to "accurately reflect the latest scientific knowledge useful in indicating the kind and extent of all

identifiable effects on public health or welfare which may be expected from the presence of [a] pollutant in the ambient air . . ." 42 U.S.C. § 7408(b). Section 109 (42 U.S.C. 7409) directs the Administrator to propose and promulgate "primary" and "secondary" NAAQS for pollutants for which air quality criteria are issued. Section 109(b)(1) defines a primary standard as one "the attainment and maintenance of which in the judgment of the Administrator, based on such criteria and allowing an adequate margin of safety, are requisite to protect the public health."[1] A secondary standard, as defined in section 109(b)(2), must "specify a level of air quality the attainment and maintenance of which, in the judgment of the Administrator, based on such criteria, is requisite to protect the public welfare from any known or anticipated adverse effects associated with the presence of [the] pollutant in the ambient air."[2]

The requirement that primary standards provide an adequate margin of safety was intended to address uncertainties associated with inconclusive scientific and technical information available at the time of standard setting. It was also intended to provide a reasonable degree of protection against hazards that research has not yet identified. See *State of Mississippi v. EPA*, 744 F. 3d 1334, 1353 (D.C. Cir. 2013) ("By requiring an 'adequate margin of safety', Congress was directing EPA to build a buffer to protect against uncertain and unknown dangers to human health"); see *also Lead Industries Association v. EPA*, 647 F.2d 1130, 1154 (D.C. Cir 1980); *American Petroleum Institute v. Costle*, 665 F.2d 1176, 1186 (D.C. Cir. 1981); *American*

---

[1] The legislative history of section 109 indicates that a primary standard is to be set at "the maximum permissible ambient air level . . . which will protect the health of any [sensitive] group of the population," and that, for this purpose, "reference should be made to a representative sample of persons comprising the sensitive group rather than to a single person in such a group." S. Rep. No. 91-1196, 91st Cong., 2d Sess. 10 (1970).

[2] Welfare effects as defined in section 302(h) (42 U.S.C. 7602(h)) include, but are not limited to, "effects on soils, water, crops, vegetation, man-made materials, animals, wildlife, weather, visibility and climate, damage to and deterioration of property, and hazards to transportation, as well as effects on economic values and on personal comfort and well-being."

Farm Bureau Federation v. EPA, 559 F. 3d 512, 533 (D.C. Cir. 2009); *Association of Battery Recyclers v. EPA*, 604 F. 3d 613, 617-18 (D.C. Cir. 2010). Both kinds of uncertainties are components of the risk associated with pollution at levels below those at which human health effects can be said to occur with reasonable scientific certainty. Thus, in selecting primary standards that provide an adequate margin of safety, the Administrator is seeking not only to prevent pollution levels that have been demonstrated to be harmful but also to prevent lower pollutant levels that may pose an unacceptable risk of harm, even if the risk is not precisely identified as to nature or degree. The CAA does not require the Administrator to establish a primary NAAQS at a zero-risk level or at background concentrations, see *Lead Industries v. EPA*, 647 F.2d at 1156 n.51; *State of Mississippi v. EPA*, 744 F. 3d at 1351, but rather at a level that reduces risk sufficiently so as to protect public health with an adequate margin of safety.

In addressing the requirement for an adequate margin of safety, the EPA considers such factors as the nature and severity of the health effects, the size of sensitive population(s)[3] at risk, and the kind and degree of the uncertainties that must be addressed. The selection of any particular approach for providing an adequate margin of safety is a policy choice left specifically to the Administrator's judgment. See *Lead Industries Association v. EPA*, 647 F.2d at 1161-62; *State of Mississippi*, 744 F. 3d at 1353.

In setting primary and secondary standards that are "requisite" to protect public health and welfare, respectively, as provided in section 109(b), the EPA's task is to establish standards that are neither more nor less stringent than necessary for these purposes. In so doing, the EPA may not consider the costs of implementing the standards. See generally, *Whitman v. American*

[3] As used here and similarly throughout this document, the term "population" refers to people having a quality or characteristic in common, including a specific pre-existing illness or a specific age or life stage.

Trucking Associations, 531 U.S. 457, 465-472, 475-76 (2001). Likewise, "[a]ttainability and technological feasibility are not relevant considerations in the promulgation of national ambient air quality standards." *American Petroleum Institute v. Costle*, 665 F. 2d at 1185.

Section 109(d)(1) requires that "not later than December 31, 1980, and at 5-year intervals thereafter, the Administrator shall complete a thorough review of the criteria published under section 108 and the national ambient air quality standards . . . and shall make such revisions in such criteria and standards and promulgate such new standards as may be appropriate . . . ." Section 109(d)(2) requires that an independent scientific review committee "shall complete a review of the criteria . . . and the national primary and secondary ambient air quality standards . . . and shall recommend to the Administrator any new . . . standards and revisions of existing criteria and standards as may be appropriate . . . ." Since the early 1980's, the Clean Air Scientific Advisory Committee (CASAC) has performed this independent review function.[4]

C. Related Control Programs to Implement O_3 Standards

States are primarily responsible for ensuring attainment and maintenance of ambient air quality standards once the EPA has established them. Under section 110 of the CAA, and related provisions, states are to submit, for the EPA's approval, state implementation plans (SIPs) that provide for the attainment and maintenance of such standards through control programs directed to sources of the pollutants involved. The states, in conjunction with the EPA, also administer the PSD program (CAA sections 160 to 169). In addition, federal programs provide for nationwide reductions in emissions of O_3 precursors and other air pollutants through the federal motor

[4] Lists of CASAC members and of members of the CASAC Ozone Review Panel are available at: http://yosemite.epa.gov/sab/sabpeople.nsf/WebCommitteesSubCommittees/Ozone%20Review%20Panel.

vehicle and motor vehicle fuel control program under title II of the CAA (sections 202 to 250) which involves controls for emissions from mobile sources and controls for the fuels used by these sources, and new source performance standards for stationary sources under section 111 of the CAA. For some stationary sources, the national emissions standards for hazardous air pollutants under section 112 of the CAA may provide ancillary reductions in O_3 precursors.

After the EPA establishes a new or revised NAAQS, the CAA directs the EPA and the states to take steps to ensure that the new or revised NAAQS is met. One of the first steps, known as the initial area designations, involves identifying areas of the country that either are attaining or not attaining the new or revised NAAQS along with the nearby areas that contribute to the violations. Upon designation of nonattainment areas, certain states would then be required to develop SIPs to attain the standards. In developing their attainment plans, states would first take into account projected emission reductions from federal and state rules that have been already adopted at the time of plan submittal. A number of significant emission reduction programs that will lead to reductions of O_3 precursors are in place today or are expected to be in place by the time any new SIPs will be due. Examples of such rules include the Nitrogen Oxides (NO_X) SIP Call, Clean Air Interstate Rule (CAIR), and Cross-State Air Pollution Rule (CSAPR),[5] regulations controlling onroad and nonroad engines and fuels, the utility and industrial boilers hazardous air pollutant rules, and various other programs already adopted by states to reduce emissions from key emissions sources. States would then evaluate the level of additional emission reductions needed for each nonattainment area to attain the O_3 standards "as

[5] The Cross-State Air Pollution Rule was recently upheld by the Supreme Court in *Environmental Protection Agency v. EME Homer City Generation*, U.S. (2014). The D.C. Circuit has since lifted the stay of the rule. Order, Document #1518738, *EME Homer City Generation, L.P. v. EPA*, Case #11-1302 (D.C. Cir. Oct. 23, 2014).

expeditiously as practicable," and adopt new state regulations as appropriate. Section VII of this preamble includes additional discussion of designation and implementation issues associated with any revised O_3 NAAQS.

D. Review of Air Quality Criteria and Standards for O_3

The EPA first established primary and secondary NAAQS for photochemical oxidants in 1971 (36 FR 8186, April 30, 1971). The EPA set both primary and secondary standards at a level of 0.08 parts per million (ppm), 1-hr average, total photochemical oxidants, not to be exceeded more than one hour per year. The EPA based the standards on scientific information contained in the 1970 *Air Quality Criteria for Photochemical Oxidants* (U.S. DHEW, 1970). The EPA initiated the first periodic review of the NAAQS for photochemical oxidants in 1977. Based on the 1978 *Air Quality Criteria for Ozone and Other Photochemical Oxidants* (U.S. EPA, 1978), the EPA published proposed revisions to the original NAAQS in 1978 (43 FR 16962) and final revisions in 1979 (44 FR 8202). At that time, the EPA revised the level of the primary and secondary standards from 0.08 to 0.12 ppm and changed the indicator from photochemical oxidants to O_3, and the form of the standards from a deterministic (i.e., not to be exceeded more than one hour per year) to a statistical form. This statistical form defined attainment of the standards as occurring when the expected number of days per calendar year with maximum hourly average concentration greater than 0.12 ppm equaled one or less.

Following the final decision in the 1979 review, the City of Houston challenged the Administrator's decision arguing that the standard was arbitrary and capricious because natural O_3 concentrations and other physical phenomena in the Houston area made the standard unattainable in that area. The U.S. Court of Appeals for the District of Columbia Circuit (D.C. Circuit) rejected this argument, holding (as noted above) that attainability and technological

feasibility are not relevant considerations in the promulgation of the NAAQS. The court also noted that the EPA need not tailor the NAAQS to fit each region or locale, pointing out that Congress was aware of the difficulty in meeting standards in some locations and had addressed this difficulty through various compliance related provisions in the CAA. See *API v. Costle*, 665 F.2d 1176, 1184-6 (D.C. Cir. 1981).

In 1982, the EPA announced plans to revise the 1978 Air Quality Criteria document (47 FR 11561), and in 1983, the EPA initiated the second periodic review of the O_3 NAAQS (48 FR 38009). The EPA subsequently published the 1986 *Air Quality Criteria for Ozone and Other Photochemical Oxidants* (U.S. EPA, 1986) and the 1989 Staff Paper (U.S. EPA, 1989). Following publication of the 1986 Air Quality Criteria Document (AQCD), a number of scientific abstracts and articles were published that appeared to be of sufficient importance concerning potential health and welfare effects of O_3 to warrant preparation of a Supplement (U.S. EPA, 1992). On August 10, 1992, under the terms of a court order, the EPA published a proposed decision to retain the existing primary and secondary standards (57 FR 35542). The notice explained that the proposed decision would complete the EPA's review of information on health and welfare effects of O_3 assembled over a 7-year period and contained in the 1986 AQCD and its 1992 Supplement. The proposal also announced the EPA's intention to proceed as rapidly as possible with the next review of the air quality criteria and standards for O_3 in light of emerging evidence of health effects related to 6- to 8-hour O_3 exposures. On March 9, 1993, the EPA concluded the review by affirming its proposed decision to retain the existing primary and secondary standards (58 FR 13008).

In August 1992, the EPA announced plans to initiate the third periodic review of the air quality criteria and O_3 NAAQS (57 FR 35542). In December 1996, the EPA proposed to replace

the then-existing 1-hour primary and secondary standards with 8-hour average O_3 standards set at a level of 0.08 ppm (equivalent to 0.084 ppm using standard rounding conventions) (61 FR 65716). The EPA also proposed to establish a new distinct secondary standard using a biologically based cumulative, seasonal form. The EPA completed this review on July 18, 1997 (62 FR 38856) by setting the primary standard at a level of 0.08 ppm, based on the annual fourth-highest daily maximum 8-hr average concentration, averaged over three years, and setting the secondary standard identical to the revised primary standard. In reaching this decision, the EPA identified several reasons supporting its decision to reject a potential alternate standard set at 0.07 ppm. Most importantly, the EPA pointed out the scientific uncertainty at lower concentrations and placed significant weight on the fact that no CASAC panel member supported a standard level set lower than 0.08 ppm (62 FR 38868). In addition to noting the uncertainties in the health evidence for exposure concentrations below 0.08 ppm and the advice of CASAC, the EPA noted that a standard set at a level of 0.07 ppm would be closer to peak background concentrations that infrequently occur in some areas due to nonanthropogenic sources of O_3 precursors (62 FR 38856, 38868; July 18, 1997).

On May 14, 1999, in response to challenges by industry and others to the EPA's 1997 decision, the D.C. Circuit remanded the O_3 NAAQS to the EPA, finding that section 109 of the CAA, as interpreted by the EPA, effected an unconstitutional delegation of legislative authority. *American Trucking Assoc. vs. EPA*, 175 F.3d 1027, 1034-1040 (D.C. Cir. 1999) ("*ATA I*"). In addition, the court directed that, in responding to the remand, the EPA should consider the potential beneficial health effects of O_3 pollution in shielding the public from the effects of solar ultraviolet (UV) radiation, as well as adverse health effects. *Id.* at 1051-53. In 1999, the EPA petitioned for rehearing *en banc* on several issues related to that decision. The court granted the

request for rehearing in part and denied it in part, but declined to review its ruling with regard to the potential beneficial effects of O_3 pollution. 195 F. 3d 4, 10 (D.C Cir., 1999) ("*ATA II*"). On January 27, 2000, the EPA petitioned the U.S. Supreme Court for certiorari on the constitutional issue (and two other issues), but did not request review of the ruling regarding the potential beneficial health effects of O_3. On February 27, 2001, the U.S. Supreme Court unanimously reversed the judgment of the D.C. Circuit on the constitutional issue. *Whitman v. American Trucking Assoc*., 531 U. S. 457, 472-74 (2001) (holding that section 109 of the CAA does not delegate legislative power to the EPA in contravention of the Constitution). The Court remanded the case to the D.C. Circuit to consider challenges to the O_3 NAAQS that had not been addressed by that court's earlier decisions. On March 26, 2002, the D.C. Circuit issued its final decision on remand, finding the 1997 O_3 NAAQS to be "neither arbitrary nor capricious," and so denying the remaining petitions for review. *American Trucking Associations, Inc. v EPA*, 283 F.3d 355, 379 (D.C Cir., 2002)("*ATA III*").

Specifically, in *ATA III*, the D.C. Circuit upheld the EPA's decision on the 1997 O_3 standard as the product of reasoned decision-making. With regard to the primary standard, the court made clear that the most important support for EPA's decision to revise the standard was the health evidence of insufficient protection afforded by the then-existing standard ("the record is replete with references to studies demonstrating the inadequacies of the old one-hour standard"), as well as extensive information supporting the change to an 8-hour averaging time. 283 F. 3d at 378. The court further upheld the EPA's decision not to select a more stringent level for the primary standard noting "the absence of any human clinical studies at ozone concentrations below 0.08 [ppm]" which supported EPA's conclusion that "the most serious health effects of ozone are 'less certain' at low concentrations, providing an eminently rational

reason to set the primary standard at a somewhat higher level, at least until additional studies become available." *Id.* (internal citations omitted). The Court also pointed to the significant weight that the EPA properly placed on the advice it received from CASAC. Id. at 379. In addition, the court noted that "although relative proximity to peak background O_3 concentrations did not, in itself, necessitate a level of 0.08 [ppm], EPA could consider that factor when choosing among the three alternative levels." *Id.*

Independently of the litigation, the EPA responded to the court's remand to consider the potential beneficial health effects of O_3 pollution in shielding the public from effects of UV radiation. The EPA provisionally determined that the information linking changes in patterns of ground-level O_3 concentrations to changes in relevant patterns of exposures to UV radiation of concern to public health was too uncertain, at that time, to warrant any relaxation in 1997 O_3 NAAQS. The EPA also expressed the view that any plausible changes in UV-B radiation exposures from changes in patterns of ground-level O_3 concentrations would likely be very small from a public health perspective. In view of these findings, the EPA proposed to leave the 1997 8-hour NAAQS unchanged (66 FR 57268, Nov. 14, 2001). After considering public comment on the proposed decision, the EPA published its final response to this remand on January 6, 2003, re-affirming the 8-hour O_3 NAAQS set in 1997 (68 FR 614).

The EPA initiated the fourth periodic review of the air quality criteria and O_3 standards in September 2000 with a call for information (65 FR 57810). The schedule for completion of that review was ultimately governed by a consent decree resolving a lawsuit filed in March 2003 by plaintiffs representing national environmental and public health organizations, who maintained that the EPA was in breach of a mandatory legal duty to complete review of the O_3 NAAQS within a statutorily mandated deadline. On July 11, 2007, the EPA proposed to revise the level of

the primary standard within a range of 0.075 to 0.070 ppm (72 FR 37818). Documents supporting this proposed decision included the *Air Quality Criteria for Ozone and Other Photochemical Oxidants* (U.S. EPA, 2006a) and the Staff Paper (U.S EPA, 2007) and related technical support documents. The EPA also proposed two options for revising the secondary standard: (1) replace the current standard with a cumulative, seasonal standard, expressed as an index of the annual sum of weighted hourly concentrations cumulated over 12 daylight hours during the consecutive 3-month period within the O_3 season with the maximum index value, set at a level within the range of 7 to 21 ppm-hrs, or (2) set the secondary standard identical to the proposed primary standard. The EPA completed the review with publication of a final decision on March 27, 2008 (73 FR 16436). In that final rule, the EPA revised the NAAQS by lowering the level of the 8-hour primary O_3 standard from 0.08 ppm to 0.075 ppm, not otherwise revising the primary standard, and adopting a secondary standard identical to the revised primary standard. In May 2008, state, public health, environmental, and industry petitioners filed suit challenging the EPA's final decision on the 2008 O_3 standards. On September 16, 2009, the EPA announced its intention to reconsider the 2008 O_3 standards, and initiated a rulemaking to do so. At the EPA's request, the Court held the consolidated cases in abeyance pending the EPA's reconsideration of the 2008 decision.

On January 19, 2010 (75 FR 2938), the EPA issued a notice of proposed rulemaking to reconsider the 2008 final decision. In that notice, the EPA proposed that further revisions of the primary and secondary standards were necessary to provide a requisite level of protection to public health and welfare. The EPA proposed to decrease the level of the 2008 8-hour primary standard from 0.075 ppm to a level within the range of 0.060 to 0.070 ppm, and to change the secondary standard to a new cumulative, seasonal standard expressed as an annual index of the

sum of weighted hourly concentrations, cumulated over 12 hours per day (8 am to 8 pm), during the consecutive 3-month period within the O_3 season with a maximum index value, set at a level within the range of 7 to 15 ppm-hours. The Agency also solicited CASAC review of the proposed rule on January 25, 2010 and solicited additional CASAC advice on January 26, 2011. After considering comments from CASAC and the public, the EPA prepared a draft final rule, which was submitted for interagency review pursuant to Executive Order 12866. On September 2, 2011, consistent with the direction of the President, the Administrator of the Office of Information and Regulatory Affairs (OIRA), Office of Management and Budget (OMB), returned the draft final rule to the EPA for further consideration. In view of this return and the fact that the Agency's next periodic review of the O_3 NAAQS required under CAA section 109 had already begun (as announced on September 29, 2008), the EPA deferred the decisions involved in the reconsideration until it completed its statutorily required periodic review.

In light of EPA's decision to consolidate the reconsideration with the current review, the D.C. Circuit proceeded with the litigation on the 2008 final decision. On July 23, 2013, the Court upheld the EPA's 2008 primary O_3 standard, but remanded the 2008 secondary standard to the EPA. *State of Mississippi v. EPA*, 744 F. 3d 1334. With respect to the primary standard, the court first held that the EPA reasonably determined that the existing standard was not requisite to protect public health with an adequate margin of safety, and consequently required revision. Specifically, the court noted that there were "numerous epidemiologic studies linking health effects to exposure to ozone levels below 0.08 ppm and clinical human exposure studies finding a causal relationship between health effects and exposure to ozone levels at and below 0.08 ppm." 744 F. 3d at 1345. The court also specifically endorsed the weight of evidence approach utilized by the EPA in its deliberations. *Id.* at 1344.

The court went on to reject arguments that the EPA should have adopted a more stringent primary standard. Dismissing arguments that a clinical study (as properly interpreted by the EPA) showing effects at 0.06 ppm necessitated a standard level lower than that selected, the court noted that this was a single, limited study. *Id.* at 1350. With respect to the epidemiologic evidence, the court accepted the EPA's argument that there could be legitimate uncertainty that a causal relationship between O_3 and 8-hour exposures less than 0.075 ppm exists, so that associations at lower levels reported in epidemiologic studies did not necessitate a more stringent standard. Id. at 1351-52.[6]

The court also rejected arguments that an 8-hour primary standard of 0.075 ppm failed to provide an adequate margin of safety, noting that margin of safety considerations involved policy judgments by the agency, and that by setting a standard "appreciably below" the level of the current standard (0.08 ppm), the agency had made a reasonable policy choice. *Id.* Finally, the court rejected arguments that the EPA's decision was inconsistent with CASAC's scientific recommendations because CASAC had been insufficiently clear in its recommendations whether it was providing scientific or policy recommendations, and the EPA had reasonably addressed CASAC's policy recommendations. *Id.* at 1357-58.

With respect to the secondary standard, the court held that because the EPA had failed to identify a level of air quality requisite to protect public welfare, the EPA's comparison between the primary and secondary standards for determining if requisite protection for public welfare was afforded by the primary standard did not comply with the CAA. The court thus rejected the

[6] The court cautioned, however, that "perhaps more [clinical] studies like the Adams studies will yet reveal that the 0.060 ppm level produces significant adverse decrements that simply cannot be attributed to normal variation in lung function," and further cautioned that "agencies may not merely recite the terms 'substantial uncertainty' as a justification for their actions." *Id.* at 1350, 1357 (internal citations omitted).

EPA's explanation for setting the secondary standard identical to the revised 8-hour primary standard, and remanded the secondary standard to the EPA. *Id*. at 1360-62.

At the time of the court's decision, the EPA had already completed significant portions of its next statutorily required periodic review of the O_3 NAAQS. On September 29, 2008, the EPA announced the initiation of a new periodic review of the air quality criteria for O_3 and related photochemical oxidants and issued a call for information in the *Federal Register* (73 FR 56581, Sept. 29, 2008). A wide range of external experts, as well as the EPA staff, representing a variety of areas of expertise (e.g., epidemiology, human and animal toxicology, statistics, risk/exposure analysis, atmospheric science, ecology, biology, plant science, ecosystem services) participated in a workshop. This workshop was held on October 28-29, 2008 in Research Triangle Park, NC. The workshop provided an opportunity for a public discussion of the key policy-relevant issues around which the EPA would structure this O_3 NAAQS review and the most meaningful new science that would be available to inform our understanding of these issues.

Based in part on the workshop discussions, the EPA developed a draft Integrated Review Plan (IRP) outlining the schedule, process, and key policy-relevant questions that would guide the evaluation of the air quality criteria for O_3 and the review of the primary and secondary O_3 NAAQS. A draft of the IRP was released for public review and comment in September 2009. This IRP was the subject of a consultation with the CASAC on November 13, 2009 (74 FR 54562; October 22, 2009).[7] The EPA considered comments received from that consultation and from the public in finalizing the plan and in beginning the review of the air quality criteria. The

[7] See http://yosemite.epa.gov/sab/sabproduct.nsf/WebProjectsbyTopicCASAC!OpenView for more information on CASAC activities related to the current O_3 NAAQS review.

EPA's overall plan and schedule for this review is presented in the *Integrated Review Plan for the Ozone National Ambient Air Quality Standards*.[8]

As part of the process of preparing the O_3 ISA, the EPA's NCEA hosted a workshop to review and discuss preliminary drafts of key sections of the ISA on August 6, 2010 (75 FR 42085, July 20, 2010). The CASAC and the public reviewed the first external review draft ISA (U.S. EPA, 2011a; 76 FR 10893, February 28, 2011) at a meeting held in May 19-20, 2011 (76 FR 23809; April 28, 2011). Based on CASAC and public comments, NCEA prepared a second draft ISA (U.S. EPA, 2011b; 76 FR 60820, September 30, 2011). CASAC and the public reviewed this draft at a January 9-10, 2012 (76 FR 236, December 8, 2011) meeting. Based on CASAC and public comments, NCEA prepared a third draft ISA (U.S. EPA 2012a; 77 FR 36534; June 19, 2012), which was reviewed at a CASAC meeting in September 2012. The EPA released the final ISA (EPA/600/R-10/076F) in February 2013.

The EPA presented its plans for conducting the Risk and Exposure Assessments (REAs) that build on the scientific evidence presented in the ISA, in two planning documents titled *Ozone National Ambient Air Quality Standards: Scope and Methods Plan for Health Risk and Exposure Assessment* and *Ozone National Ambient Air Quality Standards: Scope and Methods Plan for Welfare Risk and Exposure Assessment* (henceforth, Scope and Methods Plans).[9] These planning documents outlined the scope and approaches that staff planned to use in conducting quantitative assessments, as well as key issues that would be addressed as part of the assessments. The EPA released these documents for public comment in April 2011, and

[8] EPA 452/R-11-006; April 2011; Available: http://www.epa.gov/ttn/naaqs/standards/ozone/data/2011_04_OzoneIRP.pdf
[9] EPA-452/P-11-001 and -002; April 2011; Available: http://www.epa.gov/ttn/naaqs/standards/ozone/s_o3_2008_pd.html

consulted with CASAC on May 19-20, 2011 (76 FR 23809; April 28, 2011). In designing and conducting the initial health risk and welfare risk assessments, the EPA considered CASAC comments (Samet, 2011) on the Scope and Methods Plans and also considered public comments. In May 2012, the EPA issued a memo titled *Updates to Information Presented in the Scope and Methods Plans for the Ozone NAAQS Health and Welfare Risk and Exposure Assessments* that described changes to elements of the scope and methods plans and provided a brief explanation of each change and the reason for it.

In July 2012, the EPA made the first drafts of the Health and Welfare REAs available for CASAC review and public comment (77 FR 42495, July 19, 2012). The first draft PA[10] was made available for CASAC review and public comment in August 2012. These documents were reviewed by the CASAC O_3 Panel at a public meeting in September 2012. The second draft REAs and PA, made available by the EPA in January 2014 (79 FR 4694, January 29, 2014), were prepared with consideration of advice from CASAC (Frey and Samet, 2012a, 2012b) and comments from the public. These drafts were reviewed by the CASAC O_3 Panel at a public meeting on March 25-27, 2014. The CASAC issued final reports on the second drafts of the HREA on July 1, 2014 (Frey, 2014a), and the WREA on June 18, 2014 (Frey, 2014b), respectively. The CASAC issued a final report on the second draft PA on June 26, 2014 (Frey, 2014c). The final versions of the HREA (U.S. EPA 2014a), WREA (U.S. EPA, 2014b), and PA

[10] The PA is prepared by the staff in the EPA's Office of Air Quality Planning and Standards (OAQPS). It presents a staff evaluation of the policy implications of the key scientific and technical information in the ISA and REAs for the EPA's consideration. The PA provides a transparent evaluation, and staff conclusions, regarding policy considerations related to reaching judgments about the adequacy of the current standards, and if revision is considered, what revisions may be appropriate to consider. The PA is intended to help "bridge the gap" between the agency's scientific assessments presented in the ISA and REAs, and the judgments required of the EPA Administrator in determining whether it is appropriate to retain or revise the NAAQS.

(U.S. EPA, 2014c) were made available by the EPA in August, 2014. These documents reflect staff's consideration of the comments and recommendations made by CASAC, as well as comments made by members of the public, in their review of the draft versions of these documents.

E. Ozone Air Quality

Ozone is formed near the Earth's surface due to chemical interactions involving solar radiation and precursor pollutants including volatile organic compounds (VOCs), nitrogen oxides (NO_X), methane (CH_4) and carbon monoxide (CO). The precursor emissions leading to O_3 formation can result from both man-made sources (e.g., motor vehicles and electric power generation) and natural sources (e.g., vegetation and wildfires). Occasionally, O_3 that is created naturally in the stratosphere can also contribute to O_3 levels near the surface. Once formed, O_3 can be transported by winds before eventually being removed from the atmosphere via chemical reactions or deposition to surfaces. In sum, O_3 concentrations are influenced by complex interactions between precursor emissions, meteorological conditions, and surface characteristics.

In order to continuously assess O_3 air pollution levels, state and local environmental agencies operate O_3 monitors at various locations and subsequently submit the data to the EPA. At present, there are approximately 1,400 monitors across the U.S. reporting hourly O_3 averages during the times of the year when local O_3 pollution can be important. Much of this monitoring is focused on O_3 measurements in urban areas where precursor emissions tend to be largest, as well as locations directly downwind of these areas, but there are also over 100 sites in rural areas where high levels of O_3 can periodically exist due to transport from upwind sources. Based on data from this national network, the EPA estimates that approximately 133 million Americans live in counties where O_3 concentrations were above the level of the existing health-based

NAAQS of 0.075 ppm at least 4 days in 2012. High O_3 values can occur almost anywhere within the contiguous 48 states, although locations in California, Texas, and the Northeast Corridor are especially subject to poor O_3 air quality. From a temporal perspective, the highest daily peak O_3 concentrations generally tend to occur during the afternoon within the warmer months due to higher solar radiation and other conducive meteorological conditions during these times. The exceptions to this general rule include: 1) some rural sites where transport of O_3 from upwind areas of regional production can occasionally result in high nighttime levels of O_3, 2) high-elevation sites periodically influenced by stratospheric intrusions, and 3) certain locations in the western U.S. where large quantities of O_3 precursors emissions associated with oil and gas development can be trapped by strong inversions associated with snow cover during the colder months and efficiently converted to O_3.

One of the challenging aspects of developing plans to reduce emissions leading to high O_3 concentrations is that the response of O_3 to precursor reductions is nonlinear. In particular, NO_X causes both the formation and destruction of O_3. The net impact of NO_X emissions on O_3 concentrations depends on the local quantities of NO_X, VOC, and sunlight which interact in a set of complex chemical reactions. In some areas, such as urban centers where NO_X emissions typically are high, NO_X leads to the net destruction of O_3, making O_3 levels lower in the immediate vicinity. This phenomenon is particularly pronounced under conditions that lead to low O_3 concentrations (i.e. during cool, cloudy weather and at night when photochemical activity is limited or nonexistent). However, while NO_X can initially destroy O_3 near the emission sources, these same NO_X emissions eventually do react to form more O_3 downwind. Photochemical model simulations suggest that the additional expected reductions in NO_X emissions will slightly increase O_3 concentrations on days with lower O_3 concentrations in areas

in close proximity to NO_X sources, while at the same time decreasing the highest O_3 concentrations in outlying areas. See generally, U.S.EPA, 2014a (section 2.2.1).

At present, both the primary and secondary NAAQS use the annual fourth-highest daily maximum 8-hour concentration, averaged over 3 years, as the form of the standard. An additional air quality metric, referred to as W126, is often used to assess cumulative impact of O_3 exposure on ecosystems and vegetation. W126 is a seasonal aggregate of weighted hourly O_3 values observed between 8 am and 8 pm. As O_3 precursor emissions have decreased across the U.S., O_3 design values[11] have concurrently shown a modest downward trend. Ozone design values decreased by approximately 9% on average between 2000 and 2012. Air quality model simulations estimate that peak O_3 levels will continue to improve over the next decade as additional reductions in O_3 precursors from power plants, motor vehicles, and other sources are realized.

In addition to being affected by changing emissions, future O_3 concentrations will also be affected by climate change. Modeling studies in EPA's Interim Assessment (U.S. EPA, 2009b) and cited in support of the 2009 Endangerment Finding (74 FR 66,496; Dec. 15, 2009) show that, while the impact is not uniform, climate change has the potential to cause increases in summertime O_3 concentrations over substantial regions of the country, with increases tending to occur during higher peak pollution episodes in the summer, if offsetting emissions reductions are not made. Increases in temperature are expected to be the principal factor in driving any ozone increases, although increases in stagnation frequency may also contribute (Jacob and Winner, 2009). These increases in O_3 pollution over broad areas of the U.S., including in the largest

[11] A design value is a statistic that describes the air quality status of a given location relative to the level of the NAAQS.

metropolitan areas with the worst O_3 problems, increase the risk of morbidity and mortality. Children, people with asthma or other lung diseases, older adults, and people who are active outdoors, including outdoor workers, are among the most vulnerable to these O_3-related health effects. If unchecked, climate change has the potential to offset some of the improvements in O_3 air quality, and therefore some of the improvements in public health, that are expected from reductions in emissions of O_3 precursors.

Another challenging aspect of the O_3 issue is the involvement of sources of O_3 and O_3 precursors beyond those from domestic, anthropogenic sources. Modeling analyses have suggested that nationally the majority of O_3 exceedances are predominantly caused by anthropogenic emissions from within the U.S. However, observational and modeling analyses have concluded that O_3 concentrations in some locations in the U.S. can be substantially influenced by sources that may not be suited to domestic control measures. In particular, certain high-elevation sites in the western U.S. are impacted by a combination of non-local sources like international transport, stratospheric O_3, and O_3 originating from wildfire emissions. Ambient O_3 from these non-local sources is collectively referred to as background O_3. See generally section 2.4 of the Policy Assessment (U.S. EPA, 2014c). The analyses suggest that, at these locations, there can be episodic events with substantial background contributions where O_3 concentrations approach or exceed the level of the current NAAQS (i.e., 75 ppb). These events are relatively infrequent and the EPA has policies that allow for the exclusion of air quality monitoring data from design value calculations when they are substantially affected by certain background influences. Wildfires pose a direct threat to air quality and public safety – threats that can be mitigated through management of wildland vegetation. The use of wildland prescribed fire can influence the occurrence of catastrophic wildfires which may help manage the contribution of

wildfires to background O_3 levels and periodic peak O_3 events. Prescribed fire mimics a natural process necessary to manage and maintain fire-adapted ecosystems and climate change adaptation, while reducing risk of uncontrolled emissions from catastrophic wildfires. Wildfire emissions may make it more challenging to meet the NAAQS. However, the CAA requires the EPA to set the NAAQS at levels requisite to protect public health and welfare without regard to the source of the pollutant. *API*, 665 F. 2d at 1185-86. The EPA may consider proximity to background levels as a factor in the decision whether and how to revise the NAAQS when considering levels within the range of reasonable values supported by the air quality criteria and judgments of the Administrator. *ATA III*, 283 F. 3d at 379. It is in the implementation process that states and the EPA can address how to develop effective public policy in locations in which background sources contribute substantially to high O_3. Section VII.F provides more detail about how background O_3 can be addressed via CAA implementation provisions.

II. Rationale for Proposed Decision on the Primary Standard

This section presents the Administrator's rationale for her proposed decision to revise the existing primary O_3 standard by lowering the level of the standard to within the range of 0.065 to 0.070 ppm. As discussed more fully below, this rationale draws from the thorough review in the ISA of the available scientific evidence, published through July 2011, on human health effects associated with the presence of O_3 in the ambient air. This rationale also takes into account: (1) analyses of O_3 air quality, human exposures to O_3, and O_3-associated health risks, as presented and assessed in the HREA; (2) the EPA staff assessment of the most policy-relevant scientific evidence and exposure/risk information in the PA; (3) CASAC advice and recommendations, as reflected in discussions of drafts of the ISA, REA, and PA at public meetings, in separate written

comments, and in CASAC's letters to the Administrator; and (4) public input received during the development of these documents, either in connection with CASAC meetings or separately.

Section II.A below provides an overview of the approaches used to consider the scientific evidence and exposure/risk information as it relates to the primary O_3 standard. This includes summaries of the approach adopted by the Administrator in the 2008 review of the O_3 NAAQS and of the approach adopted in the PA in the current review. Section II.B summarizes the body of evidence for health effects attributable to short- or long-term O_3 exposures, with a focus on effects for which the ISA judges that there is a "causal" or a "likely to be causal" relationship with O_3 exposures. Section II.C summarizes the HREA's quantitative estimates of O_3 exposures and health risks, including key results and uncertainties. Sections II.D and II.E present the Administrator's proposed conclusions on the adequacy of the current primary O_3 standard and alternative primary standards, respectively.

A. Approach

In the 2008 review of the O_3 NAAQS, Administrator Stephen L. Johnson revised the level of the 8-hour primary O_3 standard from 0.08 ppm[12] to 0.075 ppm (75 parts per billion (ppb)[13]). This decision was based on his consideration of the available scientific evidence and exposure/risk information, the advice and recommendations of CASAC, and comments from the public. The Administrator placed primary emphasis on the body of available scientific evidence, while viewing the results of exposure and risk assessments as providing supporting information.

[12] Due to rounding convention, the 1997 standard level of 0.08 ppm corresponded to 0.084 ppm (84 ppb).

[13] The level of the O_3 standard is specified as 0.075 ppm rather than 75 ppb. However, in the PA we refer to ppb, which is most often used in the scientific literature and in the ISA, in order to avoid the confusion that could result from switching units when discussing the evidence in relation to the standard level. Similarly, in the preamble to this notice we refer to ppb.

Specifically, he judged that a standard set at 75 ppb would be appreciably below the concentration at which adverse effects had been demonstrated in the controlled human exposure studies available at that time (i.e., 80 ppb), and would provide a significant increase in protection compared to the then-current standard. The Administrator further concluded that the body of evidence did not support setting a lower standard level, given the increasing uncertainty in the evidence at lower O_3 concentrations (U.S. EPA, 2014c, Chapter 1).

In the current review, the EPA's approach to informing decisions on the primary O_3 standard builds upon the general approach used in the last review and reflects the broader body of scientific evidence, updated exposure/risk information, and advances in O_3 air quality modeling now available. This approach, described in detail in the PA (U.S. EPA, 2014c, section 1.3.1), is based most fundamentally on using the EPA's assessment of the available scientific evidence and associated quantitative analyses to inform the Administrator's judgments regarding a primary standard for O_3 that is "requisite" (i.e., neither more nor less stringent than necessary) to protect public health with an adequate margin of safety. Specifically, it is based on consideration of the available body of scientific evidence assessed in the ISA (U.S. EPA, 2013a), exposure and risk analyses presented in the HREA (U.S. EPA, 2014a), advice and recommendations from CASAC (Frey, 2014a, c), and public comments. Based on the application of this approach, the PA assesses and integrates the evidence and information, and reaches conclusions for the Administrator's consideration about the range of policy options that could be supported. The remainder of this section describes the PA's approach to reviewing the primary O_3 standard, and to informing the Administrator's proposed decisions on the current and alternative standards.

As an initial matter, the PA recognizes that the final decision to retain or revise the current primary O_3 standard is a public health policy judgment to be made by the Administrator and will draw upon the available scientific evidence for O_3-attributable health effects and on analyses of population exposures and health risks, including judgments about the appropriate weight to assign the range of uncertainties inherent in the evidence and analyses. The PA's general approach to informing these public health policy judgments recognizes that the available health effects evidence reflects a continuum from relatively higher O_3 concentrations, at which scientists generally agree that health effects are likely to occur, through lower concentrations, at which the likelihood and magnitude of a response become increasingly uncertain. Therefore, the conclusions in the PA reflect an interpretation of the available scientific evidence and exposure/risk information that, in the views of the EPA staff, neither overstates nor understates the strengths and limitations of that evidence and information.[14] This approach is consistent with the requirements of sections 108 and 109 of the CAA, as well as with how the EPA and the courts have historically interpreted the CAA.

The PA draws upon an integrative synthesis of the entire body of available scientific evidence for O_3-related health effects, including the evidence newly available in the current review and the evidence from previous reviews, as presented in the ISA (U.S. EPA, 2013a). Consideration of the scientific evidence is based fundamentally on information from controlled human exposure and epidemiologic studies, supplemented by information from animal toxicology studies. In the PA, such evidence informs the consideration of the health endpoints

[14] Draft versions of the PA were subject to review by CASAC and the final PA reflects consideration of the advice received from CASAC during the review process. CASAC concluded that "Overall, we find the Second Draft PA to be adequate for its intended purpose of providing a strong scientific basis for findings regarding the inadequacy of current primary and secondary ozone air quality standards" (Frey, 2014c, p. v).

and at-risk populations[15] on which to focus the current review, and the consideration of the O_3 concentrations at which various health effects can occur.

Since the 2008 review of the O_3 NAAQS, the EPA has developed formal frameworks for characterizing the strength of the scientific evidence with regard to health effects associated with exposures to O_3 in ambient air and factors that may increase risk in some populations or lifestages. These frameworks provide the basis for robust, consistent, and transparent processes for evaluating the scientific evidence, including uncertainties in the evidence, and for drawing weight-of-evidence conclusions on air pollution-related health effects and at-risk populations. These frameworks for characterizing the strength of the scientific evidence are discussed in detail in the ISA (U.S. EPA, 2013a, Preamble; Chapter 8).

With regard to characterization of health effects, the ISA uses a five-level hierarchy to classify the overall weight of evidence into one of the following categories: causal relationship, likely to be a causal relationship, suggestive of a causal relationship, inadequate to infer a causal relationship, and not likely to be a causal relationship (U.S. EPA, 2013a, Preamble Table II). In using the weight-of-evidence approach to inform judgments about the degree of confidence that various health effects are likely to be caused by exposure to O_3, confidence increases as the

[15] In this review, the term "at-risk population" is used to encompass populations or lifestages that have a greater likelihood of experiencing health effects related to exposure to an air pollutant due to a variety of factors; other terms used in the literature include susceptible, vulnerable, and sensitive. These factors may be intrinsic, such as genetic factors, lifestage, or the presence of preexisting diseases, or they may be extrinsic, such as socioeconomic status (SES), activity pattern and exercise level, or increased pollutant exposures (U.S. EPA 2013, p. lxx, 8-1, 8-2). The courts and the CAA's legislative history refer to these at-risk subpopulations as "susceptible" or "sensitive" populations. See, e.g., *American Lung Ass'n v. EPA*, 134 F. 3d 388, 389 (D.C. Cir. 1998) ("NAAQS must protect not only average health individuals, but also 'sensitive citizens' – children, for example, or people with asthma, emphysema, or other conditions rendering them particularly vulnerable to air pollution" (quoting S. Rep. No. 91-1196 at 10).

number of studies consistently reporting a particular health endpoint grows and as other factors, such as biological plausibility and the strength, consistency, and coherence of evidence, increase. Conclusions about biological plausibility and about the consistency and coherence of O_3-related health effects are drawn from the integration of epidemiologic studies with mechanistic information from controlled human exposure and animal toxicological studies, as discussed in the ISA (U.S. EPA, 2013a, EPA Framework for Causal Determination, p. 1viii). The PA places the greatest weight on the health effects for which the evidence has been judged in the ISA to support a "causal" or a "likely to be causal" relationship with O_3 exposures.

The PA further considers the evidence base assessed in the ISA with regard to the types and levels of exposure at which health effects are indicated. This consideration of the evidence, which directly informs conclusions regarding the adequacy of current or alternative standards, differs from consideration of the evidence in the ISA with regard to overarching determinations of causality. Therefore, studies that inform determinations of causality may or may not be concluded to be informative with regard to the adequacy of the current or alternative standards.[16]

As with health endpoints, the ISA's characterization of the weight of evidence for potential at-risk populations is based on the evaluation and synthesis of evidence from across scientific disciplines. The ISA uses the collective evidence to examine the coherence of effects across disciplines and to determine the biological plausibility of reported effects. Based on this approach, the ISA characterizes the evidence for a number of "factors" that have the potential to place populations at increased risk for O_3-related effects. The categories considered in evaluating

[16] For example, the PA judges that health studies evaluating exposure concentrations near or below the level of the current standard and epidemiologic studies conducted in locations meeting the current standard are particularly informative when considering the adequacy of the public health protection provided by the current standard (U.S. EPA, 2014c, Chapters 3 and 4).

the evidence for these potential at-risk factors are "adequate evidence," "suggestive evidence," "inadequate evidence," and "evidence of no effect." For the "adequate evidence" category, the ISA concludes that this category is appropriate when multiple high-quality studies show "there is substantial, consistent evidence within a discipline to conclude that a factor results in a population or lifestage being at increased risk of air pollutant-related health effect(s) relative to some reference population or lifestage" (U.S. EPA, 2013a, p. 8-2). In addition, where applicable, the "adequate evidence" category reflects a conclusion that there is coherence in the evidence across disciplines. The other categories reflect greater uncertainty in the evidence. In this review, the PA focuses on those factors for which the ISA judges there is adequate evidence of increased risk (U.S. EPA, 2013a, Table 8-5). At-risk populations are discussed in more detail in section 3.1.5 of the PA (U.S. EPA, 2014c) and these categories are discussed in more detail in the ISA (U.S. EPA, 2013a, chapter 8, Table 8-1).

Using the available scientific evidence to inform conclusions on the current and alternative standards is complicated by the recognition that a population-level threshold has not been identified below which it can be concluded with confidence that O_3-attributable effects do not occur (U.S. EPA, 2013a, section 2.5.4.4). In the absence of a discernible threshold, the PA's general approach to considering the available O_3 health evidence involves characterizing confidence in the extent to which O_3-attributable effects occur, and the extent to which such effects are adverse, over the ranges of O_3 exposure concentrations evaluated in controlled human exposure studies and over the distributions of ambient O_3 concentrations in locations where epidemiologic studies have been conducted. As noted above, the PA recognizes that the available health effects evidence reflects a continuum from relatively high O_3 concentrations, at which scientists generally agree that adverse health effects are likely to occur, through lower

concentrations, at which the likelihood and magnitude of a response become increasingly uncertain. Aspects of the approach used in this review to evaluate evidence from controlled human exposure and epidemiologic studies, respectively, are discussed below.

Controlled human exposure studies provide direct evidence of relationships between pollutant exposures and human health effects (U.S. EPA, 2013a, p.lx). Controlled human exposure studies provide data with the highest level of confidence since they provide human effects data under closely monitored conditions and can provide exposure response relationships. Such studies are particularly useful in defining the specific conditions under which pollutant exposures can result in health impacts, including the exposure concentrations, durations, and ventilation rates under which effects can occur. As discussed in the ISA, controlled human exposure studies provide clear and compelling evidence for an array of human health effects that are directly attributable to acute exposures to O_3 *per se* (i.e., as opposed to O_3 and other photochemical oxidants, for which O_3 is an indicator, or other co-occurring pollutants) (U.S. EPA, 2013a, Chapter 6). Together with animal toxicological studies, which can provide information about more serious health outcomes as well as the effects of long-term exposures and mode of action, controlled human exposure studies also help to provide biological plausibility for health effects observed in epidemiologic studies.

The PA considers the evidence from controlled human exposure studies in two ways. First, the PA considers the extent to which controlled human exposure studies provide evidence for health effects following exposures to different O_3 concentrations, down to the lowest-observed-effects levels in those studies. Second, the PA uses these studies to help evaluate the extent to which there is confidence in health effect associations reported in epidemiologic studies

down through lower ambient O_3 concentrations, where the likelihood and magnitude of O_3-attributable effects become increasingly uncertain.

The PA considers the range of O_3 exposure concentrations evaluated in controlled human exposure studies, including concentrations near or below the level of the current standard. The PA considers both group mean responses, which provide insight into the extent to which observed changes are due to O_3 exposures rather than to chance alone, and interindividual variability in responses, which provides insight into the fraction of the population that might be affected by such O_3 exposures (U.S. EPA, 2013a, section 6.2.1.1). When considering the relative weight to place on various controlled human exposure studies, the discussion in the PA focuses on the exposure conditions evaluated (e.g., exercising versus resting, exposure duration); the nature, magnitude, and likely adversity of effects over the range of reported O_3 exposure concentrations; the statistical precision of reported effects; and the consistency of results across studies for a given health endpoint and exposure concentration. In addition, because controlled human exposure studies typically involve healthy individuals and do not evaluate the most sensitive individuals in the population (U.S. EPA, 2013a, Preamble p. lx), when considering the implications of these studies for evaluation of the current and alternative standards, the PA also considers the extent to which reported effects are likely to reflect the magnitude and/or severity of effects in at-risk groups.

The PA also considers epidemiologic studies of short- and long-term O_3 concentrations in ambient air. Epidemiologic studies provide information on associations between variability in ambient O_3 concentrations and variability in various health outcomes, including lung function decrements, respiratory symptoms, school absences, hospital admissions, emergency department visits, and premature mortality (U.S. EPA, 2013a, Chapters 6 and 7). Epidemiologic studies can

inform understanding of the effects in the study population (which may include at-risk groups) of real-world exposures to the range of O_3 concentrations in ambient air, as well as provide evidence of associations between ambient O_3 levels and more serious acute and chronic health effects that cannot be assessed in controlled human exposure studies. For these studies, the degree of uncertainty introduced by confounding variables (e.g., other pollutants, temperature) and other factors (e.g., effects modifiers such as averting behavior) affects the level of confidence that the health effects being investigated are attributable to O_3 exposures, alone and in combination with copollutants.

Available epidemiologic studies have generally not indicated a discernible population threshold below which O_3 is no longer associated with health effects (U.S. EPA, 2013a, section 2.5.4.4). However, the currently available epidemiologic evidence indicates decreased confidence in reported concentration-response relationships for O_3 concentrations at the lower ends of ambient distributions due to the low density of data in this range (U.S. EPA, 2013a, section 2.5.4.4). As discussed more fully in Chapter 1 of the PA (U.S. EPA, 2014c), the general approach to considering the results of epidemiologic studies within the context of the current and alternative standards focuses on characterizing the range of ambient O_3 concentrations over which studies indicate the most confidence in O_3-associated health effects, and the concentrations below which confidence in such health effect associations becomes appreciably lower.

In placing emphasis on specific epidemiologic studies, as in past reviews, the discussion in the PA focuses on the epidemiologic studies conducted in the U.S. and Canada. Such studies reflect air quality and exposure patterns that are likely more typical of the U.S. population, since studies conducted outside the U.S. and Canada may well reflect different demographic and air

pollution characteristics.[17] The PA also focuses on studies reporting associations with effects judged in the ISA (U.S. EPA, 2013a) to be robust to confounding by other factors, including co-occurring air pollutants.

To put staff conclusions about O_3-related health effects into a broader public health context, the PA also considers exposure and risk estimates from the HREA, which develops and applies models to estimate human exposures to O_3 and O_3-related health risks in urban study areas across the United States (U.S. EPA, 2014a). The HREA estimates exposures of concern, based on interpreting quantitative exposure estimates within the context of controlled human exposure study results; lung function risks, based on applying exposure-response relationships from controlled human exposure studies to quantitative estimates of exposures; and epidemiologic-based risk estimates, based on applying concentration-response relationships drawn from epidemiologic studies to adjusted air quality. Each of these types of assessments is discussed briefly below.

As in the 2008 review, the HREA estimates exposures at or above benchmark concentrations of 60, 70, and 80 ppb, reflecting exposure concentrations of concern based on the available health evidence.[18] Estimates of exposures of concern, defined as personal exposures while at moderate or greater exertion to 8-hour average ambient O_3 levels, at or above these discrete benchmark concentrations provide perspective on the public health risks of O_3-related health effects that have been demonstrated in controlled human exposure and toxicological studies. However, because of a lack of exposure-response information across a range of exposure

[17] Though the PA recognizes that a broader body of studies, including international studies, informs the causal determinations in the ISA.
[18] For example, see 75 FR 2945-2946 (January 19, 2010) and 73 FR 16441-16442 (March 27, 2008) discussing "exposures of concern."

concentrations in these studies, these risks cannot be assessed using a quantitative risk assessment. Though this analysis is conducted using discrete benchmark concentrations, information from the broad body of evidence indicates that health-relevant exposures are more appropriately viewed as a continuum with greater confidence and certainty about the existence of health effects at higher O_3 exposure concentrations and less confidence and certainty at lower exposure concentrations. This approach recognizes that there is no sharp breakpoint within the exposure-response relationship for exposure concentrations at and above 80 ppb down to 60 ppb.

Within the context of this continuum, estimates of exposures of concern at these discrete benchmark concentrations provide some perspective on the public health impacts of O_3-related health effects, such as pulmonary inflammation, that are plausibly linked to the more serious effects seen in epidemiologic studies but cannot be evaluated in quantitative risk assessments. They also help elucidate the extent to which such impacts may be reduced by meeting the current and alternative standards. Estimates of the number of people likely to experience exposures of concern cannot be directly translated into quantitative estimates of the number of people likely to experience specific health effects due to individual variability in responsiveness. Only a subset of individuals can be expected to experience such adverse health effects, and at-risk populations or lifestages, such as people with asthma or children, are expected to be affected more by such exposures than healthy adults.

The HREA also generates quantitative estimates of O_3 health risks for air quality adjusted to just meet the current[19] and alternative standards. One approach to estimating O_3 health risks is to combine modeled exposure estimates with exposure-response relationships derived from

[19] For purposes of the exposure and risk estimates with adjusted air quality, the REA considered any value < 76 ppb to be "just meeting" the current 75 ppb standard (U.S. EPA, 2014a).

controlled human exposure studies of O_3-induced health effects. The HREA uses this approach to estimate the occurrence of O_3-induced lung function decrements in at-risk populations, including school-age children, school-age children with asthma, adults with asthma, and older adults. The available exposure-response information does not support this approach for other endpoints evaluated in controlled human exposure studies (U.S. EPA, 2014a, section 2.3).

The other approach used in this review to estimate O_3-associated health risks is to apply concentration-response relationships derived from short- and/or long-term epidemiologic studies to air quality adjusted to just meet current and alternative standards. The concentration-response relationships drawn from epidemiologic studies are based on population exposure surrogates, such as 8-hour concentrations averaged across monitors and over more than one day (U.S. EPA, 2013a, Chapter 6). The HREA presents epidemiologic-based risk estimates for O_3-associated mortality, hospital admissions, emergency department visits, and respiratory symptoms (U.S. EPA, 2014a, section 2.3). These estimates are derived from the full distributions of ambient O_3 concentrations estimated for the study locations.[20] In addition, the HREA estimates mortality risks associated with various portions of distributions of short-term O_3 concentrations (U.S. EPA, 2014a). The PA considers risk estimates based on the full distributions of ambient O_3 concentrations and, when available, estimates of the risk associated with various portions of

[20] In previous reviews, including the 2008 review and reconsideration, such risks were separately estimated for O_3 concentrations characterized as above policy-relevant background concentrations. Policy-relevant background concentrations were defined as the distribution of O_3 concentrations attributable to sources other than anthropogenic emissions of O_3 precursor emissions (e.g., VOC, CO, NO_X) in the U.S., Canada, and Mexico. The decision in this review to estimate total risk across the full range of O_3 concentrations reflects consideration of advice from CASAC (Frey and Samet, 2012b).

those ambient distributions.[21] In doing so, the PA takes note of the ISA conclusions regarding confidence in linear concentration-response relationships over distributions of ambient concentrations (see above), and of the extent to which health effect associations at various ambient O_3 concentrations are supported by the evidence from experimental studies for effects following specific O_3 exposures.

B. Health Effects Information

This section outlines key information contained in the ISA (U.S. EPA, 2013a, Chapters 4 to 8) and in the PA (U.S. EPA, 2014c, Chapters 3 and 4) on the known or potential effects on public health which may be expected from the presence of O_3 in the ambient air. The information highlighted here summarizes: (1) new information available on potential mechanisms for health effects associated with exposure to O_3 (II.B.1); (2) the nature of effects that have been associated directly with both short- and long-term exposure to O_3 and indirectly with the presence of O_3 in ambient air (II.B.2); (3) considerations related to the adversity of O_3-attributable health effects (II.B.3); and (4) considerations in characterizing the public health impact of O_3, including the identification of "at risk" populations (II.B.4).

The decision in the 2008 rulemaking emphasized the large number of epidemiologic studies published since the 1997 review that continued to report associations with respiratory hospital admissions and emergency department visits, as well as additional health endpoints, including the effects of acute (short-term and prolonged) and chronic exposures to O_3 on lung function decrements and enhanced respiratory symptoms in asthmatic individuals, school

[21] In a series of sensitivity analyses, the HREA also evaluates a series of threshold models for respiratory mortality associated with long-term O_3 concentrations. The PA considers these risk estimates based on threshold models, in addition to HREA core estimates based on the linear model (U.S. EPA, 2014a, sections 3.2.3.2, 4.4.2.3).

absences, and premature mortality. It also emphasized controlled human exposure studies showing respiratory effects with prolonged O_3 exposures at levels below 80 ppb, changes in lung host defenses, and increased airway responsiveness, and animal toxicology studies that provided information about mechanisms of action.

The ISA (U.S. EPA, 2013a) prepared for this review emphasizes a large number of new epidemiologic studies published since the last review on effects associated with both short- and long-term exposures, including new epidemiologic studies about risk factors. It also emphasizes important new information from controlled human exposure, dosimetry and toxicology studies. Highlights of the new evidence included:

(1) Two controlled human exposure studies new since the 2008 review are now available that examine respiratory effects associated with prolonged, 6.6-hour, O_3 exposures to levels of 72 ppb[22] and 60 ppb. These studies observed effects in healthy adults, including lung function decrements combined with respiratory symptoms at 72 ppb, and lung function decrements and pulmonary inflammation at 60 ppb. These studies expand on evidence of lung function decrements with O_3 exposure at 60 ppb available in the last review, and provide new evidence of airway inflammation, a mechanism by which O_3 may cause other more serious respiratory effects (e.g., asthma exacerbations).

(2) Recent multicity and single city epidemiologic studies continue to report associations between short-term O_3 exposures and respiratory hospital admissions and respiratory emergency department visits. Recent multicity studies and a multi-continent study have reported consistent positive associations between short-term O_3 exposure and total

[22] As noted below, for the 70 ppb exposure concentration, Schelegle et al. (2009) reported that the actual mean exposure concentration was 72 ppb.

(nonaccidental) mortality, expanding upon evidence available in the last review. They also observed associations between O_3 exposure and cardiovascular and respiratory mortality.[23]

(3) Recent controlled human exposure studies reporting systemic inflammation and cardiac changes provide support for the expanded body of epidemiologic evidence for cardiovascular mortality, although lack of coherence with epidemiologic studies of cardiovascular morbidity remains an important uncertainty.

(4) New epidemiologic studies provide expanded evidence for respiratory effects associated with long-term or repeated O_3 concentrations (e.g., seasonal average of 1-or 8-hour daily max concentrations). Recent studies report interactions between exercise or different genetic variants and both new-onset asthma in children and increased respiratory symptom effects in individuals with asthma; additional studies of respiratory morbidity and mortality support the association between long-term exposure to O_3 and a range of respiratory health effects.

(5) New evidence of risk factors (i.e., people with certain genetic variants related to antioxidant status or inflammation, and people with reduced intake of antioxidant nutrients) strengthens our understanding of the potential modes of action from O_3-induced effects.

1. Overview of Mechanisms

The purpose of this section is to describe the ISA's characterization of the key events and pathways that contribute to health effects resulting from both short-term and long-term exposures

[23] The consideration of ambient O_3 concentrations in the locations of these epidemiologic studies are discussed in sections II.D.1.b and II.E.4.a below, for the current standard and alternative standards, respectively.

to O_3. The information in this section draws from section 5.3 of the ISA (U.S. EPA, 2013a). Mode of action refers to a sequence of key events and processes that result in a given toxic effect. Elucidation of mechanisms provides a more detailed understanding of these key events and processes. Experimental evidence elucidating modes of action and/or mechanisms contributes to our understanding of the biological plausibility of adverse O_3-related health effects, including respiratory effects and effects outside the respiratory system (U.S. EPA, 2013a, Chapters 6 and 7).

Figure 3.1 in the PA (U.S. EPA, 2014c) shows the current understanding of key events in the toxicity pathway of O_3, based on the available evidence. These key events are described briefly here and in more detail in section 3.1.1 of the PA. The initial key event is the formation of secondary oxidation products in the respiratory tract (U.S. EPA, 2013a, section 5.3). This mainly involves direct reactions with components of the extracellular lining fluid (ELF). Although the ELF has inherent capacity to quench (based on individual antioxidant capacity), this capacity can be overwhelmed, especially with exposure to elevated concentrations of O_3. The resulting secondary oxidation products transmit signals to the epithelium, pain receptive nerve fibers and, if present, immune cells (i.e., eosinophils, dendritic cells and mast cells) involved in allergic responses. Thus, the available evidence indicates that the effects of O_3 are mediated by components of ELF and by the multiple cell types found in the respiratory tract. Further, oxidative stress is an implicit part of this initial key event.

It is well understood that secondary oxidation products initiate numerous responses at the cellular, tissue, and whole organ level of the respiratory system. These responses include the activation of neural reflexes leading to lung function decrements, airway obstruction, and extrapulmonary effects such as slow resting heart rate; initiation of inflammation; alteration of

barrier epithelial function; sensitization of bronchial smooth muscle; modification of lung host defenses; and airways remodeling (U.S. EPA, 2013a, section 5.3.10, Figure 5-8). Each of these effects is discussed in more detail in section 3.1.1 of the PA (U.S. EPA, 2014c).

Persistent inflammation and injury, which are observed in animal models of chronic and intermittent exposure to O_3, are associated with airways remodeling (see Section 7.2.3 of the ISA, U.S. EPA 2013). Chronic intermittent exposure to O_3 has also been shown to result in effects on the developing lung and immune system. Systemic inflammation and vascular oxidative/nitrosative stress are also key events in the toxicity pathway of O_3. Extrapulmonary effects of O_3 occur in numerous organ systems, including the cardiovascular, central nervous, reproductive, and hepatic systems (U.S. EPA, 2013a, sections 6.3 to 6.5 and sections 7.3 to 7.5).

Responses to O_3 exposure are variable within the population. Studies have shown a large range of pulmonary function (i.e., spirometric) responses to O_3 among healthy young adults, while responses within an individual are relatively consistent over time. Other responses to O_3 have also been characterized by a large degree of interindividual variability. For example, a 3- to 20-fold difference among subjects in their studies in airways inflammation (i.e., neutrophilia influx) following O_3 exposure has been reported (Schelegle et al., 1991 and Devlin et al., 1991, respectively). Reproducibility of an individual's inflammatory response to O_3 exposure in humans, measured as sputum neutrophilia, was demonstrated by Holz et al (1999). Since individual inflammatory responses were relatively consistent across time, it was thought that inflammatory responsiveness reflected an intrinsic characteristic of the subject (Mudway and Kelly, 2000). While the basis for the observed interindividual variability in responsiveness to O_3 is not clear, section 5.4.2 of the ISA discusses mechanisms that may underlie the variability in responses seen among individuals. Certain functional genetic polymorphisms, pre-existing

conditions or diseases, nutritional status, lifestages, and co-exposures contribute to altered risk of O_3-induced effects. Experimental evidence for such O_3-induced changes contributes to our understanding of the biological plausibility of adverse O_3-related health effects, including a range of respiratory effects as well as effects outside the respiratory system (e.g., cardiovascular effects) (U.S. EPA, 2013a, Chapters 6 and 7).

2. Nature of Effects

The health effects of O_3 are described in detail and assessed in the ISA (U.S. EPA, 2013a). Based on this assessment, the ISA determined that a "causal" relationship exists between short-term exposure to O_3 in ambient air[24] and effects on the respiratory system and that a "likely to be causal" relationship[25] exists between long-term exposure to O_3 in ambient air and respiratory effects (U.S. EPA 2013a, pp. 1-6 to 1-7). As stated in the ISA, "[c]ollectively, a very large amount of evidence spanning several decades supports a relationship between exposure to O_3 and a broad range of respiratory effects" (US. EPA, 2013a, p. 1-6). The ISA summarizes the longstanding body of evidence for O_3 respiratory effects as follows (U.S. EPA, 2013a, p. 1-5):

> The clearest evidence for health effects associated with exposure to O_3 is provided by studies of respiratory effects. Collectively, a very large amount of evidence spanning several decades supports a relationship between exposure to O_3 and a broad range of respiratory effects (see Section 6.2.9 and Section 7.2.8). The majority of this evidence is derived from studies investigating short-term exposures (i.e., hours to weeks) to O_3, although animal toxicological studies and recent epidemiologic evidence demonstrate that long-term exposure (i.e., months to years) may also harm the respiratory system.

[24] In determining that a causal relationship exists for O_3 with specific health effects, the EPA has concluded that "[e]vidence is sufficient to conclude that there is a causal relationship with relevant pollutant exposures" (U.S. EPA, 2013a, p. lxiv).

[25] In determining a "likely to be a causal" relationship exists for O_3 with specific health effects, the EPA has concluded that "[e]vidence is sufficient to conclude that a causal relationship is likely to exist with relevant pollutant exposures, but important uncertainties remain" (U.S. EPA, 2013a, p. lxiv).

Additionally, the ISA determined that the relationships between short-term exposures to O_3 in ambient air and both total mortality and cardiovascular effects are likely to be causal, based on expanded evidence bases in the current review (U.S. EPA, 2013a, pp. 1-7 to 1-8). In the ISA, the EPA additionally determined that the currently available evidence for additional endpoints is "suggestive" of causal relationships between short-term (central nervous system effects) and long-term exposure (cardiovascular effects, reproductive and developmental effects, central nervous system effects and total mortality) to ambient O_3.

Consistent with emphasis in past reviews on O_3 health effects for which the evidence is strongest, in this review the EPA places the greatest emphasis on studies of health effects that have been judged in the ISA to be caused by, or likely to be caused by, O_3 exposures (U.S. EPA, 2013a, section 2.5.2). This section discusses the evidence for health effects attributable to O_3 exposures, with a focus on respiratory morbidity and mortality effects attributable to short- and long-term exposures, and cardiovascular system effects (including mortality) and total mortality attributable to short-term exposures. This section focuses particularly on considering the extent to which the scientific evidence available in the current review has been strengthened since the last review, and the extent to which important uncertainties and limitations in the evidence from the last review have been addressed.

a. Respiratory effects – short-term

The 2006 O_3 AQCD concluded that there was clear, consistent evidence of a causal relationship between short-term O_3 exposure and respiratory effects (U.S. EPA, 2006a). This conclusion was substantiated by evidence from controlled human exposure and toxicological studies indicating a range of respiratory effects in response to short-term O_3 exposures, including pulmonary function decrements and increases in respiratory symptoms, lung inflammation, lung

permeability, and airway hyperresponsiveness. Toxicological studies provided additional evidence for O_3-induced impairment of host defenses. Combined, these findings from experimental studies provided support for epidemiologic evidence, in which short-term increases in ambient O_3 concentration were consistently associated with decreases in lung function in populations with increased outdoor exposures, especially children with asthma and healthy children; increases in respiratory symptoms and asthma medication use in children with asthma; and increases in respiratory-related hospital admissions and asthma-related emergency department visits (U.S. EPA, 2013a, pp. 6-1 to 6-2).

As discussed in detail in the ISA (U.S. EPA, 2013a, section 6.2.9), studies evaluated since the completion of the 2006 O_3 AQCD support and expand upon the strong body of evidence that, in the last review, indicated a causal relationship between short-term O_3 exposures and respiratory health effects. Recent controlled human exposure studies conducted in young, healthy adults with moderate exertion have reported forced expiratory volume in 1 second (FEV_1) decrements and pulmonary inflammation following prolonged exposures to O_3 concentrations as low as 60 ppb, and respiratory symptoms following exposures to concentrations as low as 72 ppb (based on group mean responses).[26] Epidemiologic studies provide evidence that increases in ambient O_3 exposures are associated with lung function decrements, increases in respiratory symptoms, and pulmonary inflammation in children with asthma; increases in respiratory-related hospital admissions and emergency department visits; and increases in respiratory mortality. Some of these studies report such associations even for O_3

[26]Schelegle et al. (2009) reported a statistically significant increase in respiratory symptoms in healthy adults at a target O_3 exposure concentration of 70 ppb, averaged over the study period. For this 70 ppb target exposure concentration, Schelegle et al. (2009) reported that the actual mean exposure concentration was 72 ppb.

concentrations at the low end of the distribution of daily concentrations. Recent epidemiologic studies report that associations with respiratory morbidity and mortality are stronger during the warm/summer months and remain robust after adjustment for copollutants. Recent toxicological studies reporting O_3-induced inflammation, airway hyperresponsiveness, and impaired lung host defense continue to support the biological plausibility and modes of action for the O_3-induced respiratory effects observed in the controlled human exposure and epidemiologic studies. Further support is provided by recent studies that found O_3-associated increases in indicators of airway inflammation and oxidative stress in children with asthma (U.S. EPA, 2013a, section 6.2.9). Together, epidemiologic and experimental studies support a continuum of respiratory effects associated with O_3 exposure that can result in respiratory-related emergency department visits, hospital admissions, and/or mortality (U.S. EPA, 2013a, section 6.2.9).

Across respiratory endpoints, evidence indicates antioxidant capacity may modify the risk of respiratory morbidity associated with O_3 exposure (U.S. EPA, 2013a, section 6.2.9, p. 6-161). The potentially elevated risk of populations with diminished antioxidant capacity and the reduced risk of populations with sufficient antioxidant capacity is supported by epidemiologic studies and from controlled human exposure studies. Additional evidence characterizes O_3-induced decreases in antioxidant levels as a key event in the mode of action for downstream effects.

Key aspects of this evidence are discussed below with regard to lung function decrements; pulmonary inflammation, injury, and oxidative stress; airway hyperresponsiveness;

respiratory symptoms and medication use; lung host defense; allergic and asthma-related responses; hospital admissions and emergency department visits; and respiratory mortality.[27]

i. Lung function decrements

In the 2008 review, a large number of controlled human exposure studies[28] reported O_3-induced lung function decrements in young, healthy adults engaged in intermittent, moderate exertion following 6.6 hour exposures to O_3 concentrations at or above 80 ppb. Although two studies also reported effects following exposures to lower concentrations, an important uncertainty in the last review was the extent to which exposures to O_3 concentrations below 80 ppb result in lung function decrements. In addition, in the last review epidemiologic panel studies had reported O_3-associated lung function decrements in a variety of different populations (e.g., children, outdoor workers) likely to experience increased exposures. In the current review, additional controlled human exposure studies are available that have evaluated exposures to O_3 concentrations of 60 or 72 ppb. The available evidence from controlled human exposure and panel studies is assessed in detail in the ISA (U.S. EPA, section 6.2.1) and is summarized below.

Controlled exposures to O_3 concentrations that can be found in the ambient air can result in a number of lung function effects, including decreased inspiratory capacity, mild bronchoconstriction, and rapid, shallow breathing patterns during exercise. Reflex inhibition of

[27] CASAC concurred that these were "the kinds of identifiable effects on public health that are expected from the presence of ozone in the ambient air" (Frey 2014c, p. 3).

[28] The controlled human exposure studies emphasized in the PA utilize only healthy adult subjects. In the near absence of controlled human exposure data for children, HREA estimates of lung function decrements are based on the assumption that children exhibit the same lung function responses following O_3 exposures as healthy 18 year olds (U.S. EPA, 2014a, section 6.2.4 and 6.5). This assumption is justified in part by the findings of McDonnell et al. (1985), who reported that children (8-11 years old) experienced FEV_1 responses similar to those observed in adults (18-35 years old). Thus, the conclusions about the occurrence of lung function decrements that follow generally apply to children as well as to adults.

inspiration results in a decrease in forced vital capacity (FVC) and total lung capacity (TLC) and, in combination with mild bronchoconstriction, contributes to a decrease in FEV_1 (U.S. EPA, 2013a, section 6.2.1.1). Accumulating evidence indicates that such effects are mediated by activation of sensory nerves, resulting in the involuntary truncation of inspiration and a mild increase in airway obstruction due to bronchoconstriction (U.S. EPA, 2013a, section 5.3.10).

Data from controlled human exposure studies show that increasing the duration of O_3 exposures and increasing ventilation rates decreases the O_3 exposure concentrations required to impair lung function. Ozone exposure concentrations well above those typically found in ambient air are required to impair lung function in healthy resting adults, while exposure to O_3 concentrations at or below those in the ambient air have been reported to impair lung function in healthy adults exposed for longer durations while undergoing intermittent, moderate exertion (U.S. EPA, 2013a, section 6.2.1.1). With repeated O_3 exposures over several days, FEV_1 responses become attenuated in both healthy adults and adults with mild asthma, though this attenuation of response is lost after about a week without exposure (U.S. EPA, 2013a, section 6.2.1.1; p. 6-27).

When considering controlled human exposure studies of O_3-induced lung function decrements, the ISA and PA evaluate both group mean changes in lung function and the interindividual variability in the magnitude of responses. An advantage of O_3 controlled human exposure studies (i.e., compared to the epidemiologic panel studies discussed below) is that reported effects necessarily result from exposures to O_3 itself.[29] To the extent studies report

[29] The ISA notes that the use of filtered air responses as a control for the assessment of responses following O_3 exposure in controlled human exposure studies serves to eliminate alternative explanations other than O_3 itself in causing the measured responses (U.S. EPA, 2013a, section 6.2.1.1).

statistically significant decrements in mean lung function following O_3 exposures after controlling for other factors, these studies provide greater confidence that measured decrements are due to the O_3 exposure itself, rather than to chance alone. As discussed below, group mean changes in lung function are often small, especially following exposures to relatively low O_3 concentrations (e.g., 60 ppb). However, even when group mean decrements in lung function are small, some individuals could experience decrements that are "clinically meaningful" (Pellegrino et al., 2005; ATS, 1991) with respect to criteria for spirometric testing, and/or that could be considered adverse with respect to public health policy decisions (see section II.B.3, below).

At the time of the last review, a number of controlled human exposure studies had reported lung function decrements in young, healthy adults following prolonged (6.6-hour) exposures while at moderate exertion to O_3 concentrations at and above 80 ppb. In addition, there were two controlled human exposure studies by Adams (2002, 2006) that examined lung function effects following exposures to 60 ppb O_3. The EPA's analysis of the data from the Adams (2006) study reported a small but statistically significant O_3-induced decrement in group mean FEV_1 following exposures of young, healthy adults to 60 ppb O_3 while at moderate exertion, when compared with filtered air controls (Brown et al., 2008).[30] Further examination of the post-exposure FEV_1 data, and mean data for other time points and other concentrations, indicated that the temporal pattern of the response to 60 ppb O_3 was generally consistent with the temporal patterns of responses to higher O_3 concentrations in this and other studies (75 FR 2950, January 19, 2010). This suggested a pattern of response following exposures to 60 ppb O_3 that

[30] Adams (2006) did not find effects on FEV_1 at 60 ppb to be statistically significant. In an analysis of the Adams (2006) data, Brown et al. (2008) showed that even after removal of potential outliers, the average effect on FEV_1 at 60 ppb was small, but highly statistically significant ($p < 0.002$) using several common statistical tests.

was consistent with a dose-response relationship, rather than random variability. See also *State of Mississippi v. EPA*, F. 3d at 1347 (upholding EPA's interpretation of the Adams studies).

Figure 6-1 in the ISA summarizes the currently available evidence from multiple controlled human exposure studies evaluating group mean changes in FEV_1 following prolonged O_3 exposures (i.e., 6.6 hours) in young, healthy adults engaged in moderate levels of physical activity (U.S. EPA, 2013a, section 6.2.1.1). With regard to the group mean changes reported in these studies, the ISA specifically notes the following (U.S. EPA, 2013a, section 6.2.1.1, Figure 6-1):

1. Prolonged exposure to 40 ppb O_3 results in a small decrease in group mean FEV_1 that is not statistically different from responses following exposure to filtered air (Adams, 2002; Adams, 2006).

2. Prolonged exposure to an average O_3 concentration of 60 ppb results in group mean FEV_1 decrements ranging from 1.8% to 3.6% (Adams 2002; Adams, 2006;[31] Schelegle et al., 2009;[32] Kim et al., 2011). Based on data from multiple studies, the weighted average group mean decrement was 2.7%. In some analyses, these group mean decrements in

[31] Adams (2006); (2002) both provide data for an additional group of 30 healthy subjects that were exposed via facemask to 60 ppb (square-wave) O_3 for 6.6 hours with moderate exercise ($\dot{V}_E$ = 23 L/min per m^2 BSA). These subjects are described on page 133 of Adams (2006) and pages 747 and 761 of Adams (2002). The FEV_1 decrement may be somewhat increased due to a target $\dot{V}_E$ of 23 L/min per m^2 BSA relative to other studies having the target $\dot{V}_E$ of 20 L/min per m^2 BSA. The facemask exposure is not expected to affect the FEV_1 responses relative to a chamber exposure.

[32] For the 60 ppb target exposure concentration, Schelegle et al. (2009) reported that the actual mean exposure concentration was 63 ppb.

lung function were statistically significant (Brown et al., 2008; Kim et al., 2011), while in other analyses they were not (Adams, 2006; Schelegle et al., 2009).[33]

3. Prolonged exposure to an average O_3 concentration of 72 ppb results in a statistically significant group mean decrement in FEV_1 of about 6% (Schelegle et al., 2009).[34]

4. Prolonged square-wave exposure to average O_3 concentrations of 80 ppb, 100 ppb, or 120 ppb O_3 results in statistically significant group mean decrements in FEV_1 ranging from 6 to 8%, 8 to 14%, and 13 to 16%, respectively (Folinsbee et al., 1988; Horstman et al., 1990; McDonnell et al., 1991; Adams, 2002; Adams, 2003; Adams, 2006).

As illustrated in Figure 6-1 of the ISA, there is a smooth dose-response curve without evidence of a threshold for exposures between 40 and 120 ppb O_3 (U.S. EPA, 2013a, Figure 6-1). When these data are taken together, the ISA concludes that "mean FEV_1 is clearly decreased by 6.6-hour exposures to 60 ppb O_3 and higher concentrations in [healthy, young adult] subjects performing moderate exercise" (U.S. EPA, 2013a, p. 6-9).

With respect to interindividual variability in lung function, in an individual with relatively "normal" lung function, with recognition of the technical and biological variability in measurements, within-day changes in FEV_1 of $\geq$ 5% are clinically meaningful (Pellegrino et al., 2005; ATS, 1991). The ISA (U.S. EPA, 2013a, section 6.1.) focuses on individuals with >10%

---

[33] Adams (2006) did not find effects on FEV_1 at 60 ppb to be statistically significant. In an analysis of the Adams (2006) data, Brown et al. (2008) addressed the more fundamental question of whether there were statistically significant differences in responses before and after the 6.6 hour exposure period and found the average effect on FEV_1 at 60 ppb to be small, but highly statistically significant using several common statistical tests, even after removal of potential outliers. Schelegle et al. (2009) reported that, compared to filtered air, the largest change in FEV_1 for the 60 ppb protocol occurred after the sixth (and final) exercise period.

[34] As noted above, for the 70 ppb exposure group, Schelegle et al. (2009) reported that the actual mean exposure concentration was 72 ppb.

decrements in FEV_1 for two reasons. A 10% FEV_1 decrement is accepted by the American Thoracic Society (ATS) as an abnormal response and a reasonable criterion for assessing exercise-induced bronchoconstriction (Dryden et al., 2010; ATS, 2000). (U.S. EPA, 2013a, section 6.2.1.1). Also, some individuals in the Schelegle et al. (2009) study experienced 5-10% FEV_1 decrements following exposure to filtered air.

In previous NAAQS reviews, the EPA has made judgments regarding the potential implications for individuals experiencing FEV_1 decrements of varying degrees of severity.[35] For people with lung disease, the EPA judged that moderate functional decrements (e.g., FEV_1 decrements > 10% but < 20%, lasting up to 24 hours) would likely interfere with normal activity for many individuals, and would likely result in more frequent use of medication (75 FR 2973, January 19, 2010). In previous reviews CASAC has endorsed these conclusions. In the context of standard setting, in the last review of the O_3 NAAQS CASAC indicated that it is appropriate to focus on the lower end of the range of moderate functional responses (e.g., FEV_1 decrements ≥ 10%) when estimating potentially adverse lung function decrements in people with lung disease, especially children with asthma (Henderson, 2006c; transcript of CASAC meeting, day 8/24/06, page 149). More specifically, CASAC stated that "[a] 10% decrement in FEV_1 can lead to respiratory symptoms, especially in individuals with pre-existing pulmonary or cardiac disease. For example, people with chronic obstructive pulmonary disease have decreased ventilatory reserve (i.e., decreased baseline FEV_1) such that a ≥ 10% decrement could lead to moderate to severe respiratory symptoms" (Samet, 2011). In this review, CASAC reiterated its support for

[35] Such judgments have been made for decrements in FEV_1 as well as for increased airway responsiveness and symptomatic responses (e.g., cough, chest pain, wheeze). Ranges of pulmonary responses and their associated potential impacts are presented in Tables 3-2 and 3-3 of the 2007 Staff Paper (U.S. EPA, 2007).

this conclusion, stating that "[a]n FEV1 decrement of ≥10% is a scientifically relevant surrogate for adverse health outcomes for people with asthma and lung disease" (Frey, 2014c p. 3). Therefore, in considering interindividual variability in O_3-induced lung function decrements in the current review, the EPA also focuses on the extent to which individuals were reported to experience FEV_1 decrements of 10% or greater.[36]

New studies (Schelegle et al., 2009; Kim et al., 2011) add to the previously available evidence for interindividual variability in the responses of healthy adults following exposures to O_3. Following prolonged exposures to 80 ppb O_3 while at moderate exertion, the proportion of healthy adults experiencing FEV_1 decrements greater than 10% was 17% by Adams (2006), 26% by McDonnell (1996), and 29% by Schelegle et al. (2009). Following exposures to 60 ppb O_3, that proportion was 20% by Adams (2002), 3% by Adams (2006), 16% by Schelegle et al. (2009), and 5% by Kim et al. (2011). Across these studies, the weighted average proportion (i.e., based on numbers of subjects in each study) of young, healthy adults with >10% FEV_1 decrements is 25% following exposure to 80 ppb O_3 and 10% following exposure to 60 ppb O_3, for 6.6 hours at moderate exertion (U.S. EPA, 2013a, page 6-18 and 6-19).[37, 38] The ISA notes that responses within an individual tend to be reproducible over a period of several months, indicating that interindividual differences reflect differences in intrinsic responsiveness. Given

[36] The approach to using results from controlled human exposure studies conducted in healthy adults to provide perspective on the potential public health impacts of O_3-related respiratory health effects is discussed in section II.A above, and in sections II.C.2 and II.C.3 below.
[37] The ISA notes that by considering responses uncorrected for filtered air exposures, during which lung function typically improves (which would increase the size of the change, pre-and post-exposure), 10% is an underestimate of the proportion of healthy individuals that are likely to experience clinically meaningful changes in lung function following exposure for 6.6 hours to 60 ppb O_3 during intermittent moderate exertion (U.S. EPA, 2012, section 6.2.1.1).
[38] Based on the data available at 60 ppb, 1% of subjects experienced decrements > 20% (also uncorrected for filtered air exposures).

this, the ISA concludes that "[t]hough group mean decrements are biologically small and generally do not attain statistical significance, a considerable fraction of exposed individuals experience clinically meaningful decrements in lung function" when exposed for 6.6 hours to 60 ppb O_3 during quasi continuous, moderate exertion (U.S. EPA, 2013a, section 6.2.1.1, p. 6-20).

This review has marked an advance in the ability to make reliable quantitative predictions of the potential lung function response to ozone exposure, and thus to reasonably predict the degree of interindividual response of lung function to that exposure. McDonnell et al. (2012) and Schelegle et al. (2012) developed models using data on O_3 exposure concentrations, ventilation rates, duration of exposures, and lung function responses from a number of controlled human exposure studies. See section 6.2.1.1 of the ISA (U.S. EPA 2013a, p. 6-15). The McDonnell et al. (2012) and Schelegle et al. (2012) studies analyzed large datasets to fit compartmental models that included the concept of a dose of onset in lung function response or a response threshold based upon the inhaled O_3 dose. The McDonnell et al. (2012) model was fit to a dataset consisting of the FEV_1 responses of 741 young, healthy adults (18-35 years of age) from 23 individual controlled exposure studies. Concentrations across individual studies ranged from 40 ppb to 400 ppb,[39] activity level ranged from rest to heavy exercise, duration of exposure was from 2 to 7.6 hours. The extension of the McDonnell et al. (2012) model to children and older adults is discussed in section 6.2.4 of the HREA (U.S. EPA, 2014a). Schelegle et al. (2012) also analyzed a large dataset with substantial overlap to that used by McDonnell et al. (2012). The Schelegle et al. (2012) model was fit to the FEV_1 responses of 220 young healthy adults (taken from a dataset of 704 individuals) from 21 individual controlled exposure studies. The resulting

[39] Responses to O_3 in these studies were adjusted for responses observed following exposure to filtered air.

empirical models can estimate the frequency distribution of individual responses for any exposure scenario as well as summary measures of the distribution such as the mean or median response and the proportions of individuals with FEV_1 decrements > 10%, 15%, and 20%.

The predictions of the McDonnell and Schelegle models are consistent with the observed results from the individual studies of O_3-induced FEV_1 decrements. Specifically, McDonnell et al. (2012) estimated that 9% of healthy exercising adults would experience FEV_1 decrements greater than 10% following 6.6 hour exposure to 60 ppb O_3, and that 22% would experience such decrements following exposure to 80 ppb O_3 (U.S. EPA, 2013a, p. 6-18 and Figure 6-3).[40] Schelegle et al. (2012) estimated that, for a prolonged (6.6 hours) O_3 exposure with moderate, quasi-continuous exercise, the average dose of onset for FEV_1 decrement would be reached following 4 to 5 hours of exposure to 60 ppb, and following 3 to 4 hours of exposure to 80 ppb. However, 14% of the individuals were estimated to have a dose of onset that was less than 40% of the average. Those individuals were estimated to reach their dose of onset following 1 to 2 hours of exposure to 50 to 80 ppb O_3 (U.S. EPA, 2013a, p. 6-16), which is consistent with the threshold FEV_1 responses reported by McDonnell et al. (2012).

CASAC agreed that these models mark a significant technical advance over the exposure-response modeling approach used in the last review (Frey, 2014a), stating that "the comparison of the MSS [McDonnell-Stewart-Smith] model results to those obtained with the exposure-response (E-R) model is of tremendous importance. Typically, the MSS model gives results about a factor of three higher than the E-R model for school-aged children, which is expected because the MSS model includes responses for a wider range of exposure protocols (under

[40] Also consistent with the data from published studies (see above), this model predicts that 1% of people would experience FEV_1 decrements > 20% following 6.6 hour exposure to 60 ppb O_3.

different levels of exertion, lengths of exposure, and patterns of exposure concentrations) than the E-R model" (Frey, 2014a, p. 7). CASAC explicitly found "the updated and expanded lung finds the MSS model to be scientifically and biologically defensible." (Frey, 2014a, pp. 2, 8).

As discussed above and in the ISA (U.S EPA, 2013a, Section 5.3.2), secondary oxidation products formed following O_3 exposures can activate neural reflexes leading to decreased lung function. The McDonnell and Schelegle models included mathematical approaches to simulate the potential protective effect of antioxidants in the ELF at lower ambient O_3 concentrations, and include a dose threshold below which changes in lung function do not occur.

Epidemiologic studies[41] have consistently linked short-term increases in ambient O_3 concentrations with lung function decrements in diverse populations and lifestages, including children attending summer camps, adults exercising or working outdoors, and groups with pre-existing respiratory diseases such as asthmatic children (U.S. EPA, 2013a, section 6.2.1.2). Some of these studies reported O_3-associated lung function decrements accompanied by respiratory symptoms[42] in asthmatic children (Just et al., 2002; Mortimer et al., 2002; Ross et al., 2002; Gielen et al., 1997; Romieu et al., 1997; Thurston et al., 1997; Romieu et al., 1996). In contrast, studies of children in the general population have reported similar O_3-associated lung function decrements but without accompanying respiratory symptoms (Ward et al., 2002; Gold et al., 1999; Linn et al., 1996) (U.S. EPA, 2013a, section 6.2.1.2).

[41] Unless otherwise specified, the epidemiologic studies discussed in the PA evaluate only adults.
[42] Reversible loss of lung function in combination with the presence of symptoms meets the ATS definition of adversity (ATS, 2000).

Several epidemiologic panel studies[43] reported statistically significant associations with lung function decrements at relatively low ambient O_3 concentrations. For outdoor recreation or exercise, associations were reported in analyses restricted to 1-hour average O_3 concentrations less than 80 ppb (Spektor et al., 1988a; Spektor et al., 1988b), 60 ppb (Brunekreef et al., 1994; Spektor et al., 1988a), and 50 ppb (Brunekreef et al., 1994). Among outdoor workers, Brauer et al. (1996) found a robust association with daily 1-hour max O_3 concentrations less than 40 ppb. Ulmer et al. (1997) found a robust association in schoolchildren with 30-minute maximum O_3 concentrations less than 60 ppb. For 8-hour average O_3 concentrations, associations with lung function decrements in children with asthma were found to persist at concentrations less than 80 ppb in a U.S. multicity study (Mortimer et al., 2002) and less than 51 ppb in a study conducted in the Netherlands (Gielen et al., 1997).

Epidemiologic panel studies investigating the effects of short-term exposure to O_3 provided information on potential confounding by copollutants such as particulate matter with a median aerodynamic diameter less than or equal to 2.5 microns ($PM_{2.5}$), particulate matter with a median aerodynamic diameter less than or equal to 10 microns (PM_{10}), nitrogen dioxide (NO_2), or sulfur dioxide (SO_2). These studies varied in how they evaluated confounding. Some studies of subjects exercising outdoors indicated that ambient concentrations of copollutants such as NO_2, SO_2, or acid aerosol were low, and thus not likely to confound associations observed for O_3 (Hoppe et al., 2003; Brunekreef et al., 1994; Hoek et al., 1993). In other studies of children with increased outdoor exposures, O_3 was consistently associated with decreases in lung function, whereas other pollutants such as $PM_{2.5}$, sulfate, and acid aerosol individually showed variable

[43] Panel studies include repeated measurements of health outcomes, such as respiratory symptoms, at the individual level (U.S. EPA, 2013a, p. 1x).

associations across studies (Thurston et al., 1997; Castillejos et al., 1995; Berry et al., 1991; Avol et al., 1990; Spektor et al., 1988a). Studies that conducted copollutant modeling generally found O_3-associated lung function decrements to be robust (i.e., most copollutant-adjusted effect estimates fell within the 95% confidence interval (CI) of the single-pollutant effect estimates) (U.S. EPA, 2013a, Figure 6-10 and Table 6-14). Most O_3 effect estimates for lung function were robust to adjustment for temperature, humidity, and copollutants such as $PM_{2.5}$, PM_{10}, NO_2, or SO_2. Although examined in only a few epidemiologic studies, O_3 also remained associated with decreases in lung function with adjustment for pollen or acid aerosols (U.S. EPA, 2013a, section 6.2.1.2).

Several epidemiologic studies demonstrated the protective effects of vitamin E and vitamin C supplementation, and increased dietary antioxidant intake, on O_3-induced lung function decrements (Romieu et al., 2002) (U.S. EPA, 2013a, Figure 6-7 and Table 6-8).[44] These results provide support for the new, quantitative models (McDonnell et al., 2012; Schelegle et al., 2012), discussed above, which make use of the concept of oxidant stress to estimate the occurrence of lung function decrements following exposures to relatively low O_3 concentrations.

In conclusion, new information from controlled human exposure studies considerably strengthens the evidence and reduces the uncertainties, relative to the evidence that was available at the time of the 2008 review, regarding the presence and magnitude of lung function decrements in healthy adults following prolonged exposures to O_3 concentrations below 80 ppb. As discussed in Section 6.2.1.1 in the ISA (U.S. EPA, 2013, p. 6-12), there is information available from four separate studies that evaluated exposures to 60 ppb O_3 (Kim et al., 2011;

[44] Evidence from controlled human exposure studies is mixed, suggesting that supplementation may be ineffective in the absence of antioxidant deficiency (U.S. EPA, 2013a, p. 5-63).

Schelegle et al., 2009; Adams 2002; 2006). Although not consistently statistically significant, group mean FEV_1 decrements following exposures to 60 ppb O_3 are consistent among these studies. Moreover, as is illustrated in Figure 6-1 of the ISA (U.S. EPA, 2013a), the group mean FEV_1 responses at 60 ppb fall on a smooth intake dose-response curve for exposures between 40 and 120 ppb O_3. Based on the data in these studies, 10% of young, healthy adults experience clinically meaningful decrements in lung function when exposed for 6.6 hours to 60 ppb O_3 during intermittent, moderate exertion. One recent study has also reported statistically significant decrements following exposures to 72 ppb O_3 (Schelegle et al., 2009). Predictions from newly developed quantitative models are consistent with these experimental results. Additionally, as discussed in more detail in section II.B.4 below, epidemiologic studies continue to provide evidence of lung function decrements in people who are active outdoors, including people engaged in outdoor recreation or exercise, children, and outdoor workers, at low ambient O_3 concentrations. While few new epidemiologic studies of O_3-associated lung function decrements are available in this review, previously available studies have reported associations with decrements, including at relatively low ambient O_3 concentrations.

ii. Pulmonary inflammation, injury, and oxidative stress

Ozone exposures result in increased respiratory tract inflammation and epithelial permeability. Inflammation is a host response to injury, and the induction of inflammation is evidence that injury has occurred. Oxidative stress has been shown to play a key role in initiating and sustaining O_3-induced inflammation. Secondary oxidation products formed as a result of reactions between O_3 and components of the ELF can increase the expression of molecules (i.e., cytokines, chemokines, and adhesion molecules) that can enhance airway epithelium permeability (U.S. EPA, 2013a, sections 5.3.3 and 5.3.4). As discussed in detail in the ISA (U.S.

EPA, 2013a, section 6.2.3), O_3 exposures can initiate an acute inflammatory response throughout the respiratory tract that has been reported to persist for at least 18-24 hours after exposure.

Inflammation induced by exposure of humans to O_3 can have several potential outcomes: (1) inflammation induced by a single exposure (or several exposures over the course of a summer) can resolve entirely; (2) continued acute inflammation can evolve into a chronic inflammatory state; (3) continued inflammation can alter the structure and function of other pulmonary tissue, leading to diseases such as asthma; (4) inflammation can alter the body's host defense response to inhaled microorganisms, particularly in potentially at-risk populations or lifestages such as the very young and old; and (5) inflammation can alter the lung's response to other agents such as allergens or toxins (U.S. EPA, 2013a, section 6.2.3). Thus, lung injury and the resulting inflammation provide a mechanism by which O_3 may cause other more serious morbidity effects (e.g., asthma exacerbations).[45]

In the last review, controlled human exposure studies reported O_3-induced airway inflammation following exposures at or above 80 ppb and animal toxicological studies provided evidence for increases in inflammation and permeability in rabbits at levels as low as 100 ppb O_3. In the current review, the link between O_3 exposures and airway inflammation and injury has been evaluated in additional controlled human exposure studies, as well as in recent epidemiologic studies. Controlled human exposure studies have generally been conducted in young, healthy adults or in adults with asthma using lavage (proximal airway and bronchoalveolar), bronchial biopsy, and more recently, induced sputum. These studies have

[45] CASAC also addressed this issue: "The CASAC believes that these modest changes in FEV_1 are usually associated with inflammatory changes, such as more neutrophils in the bronchoalveolar lavage fluid. Such changes may be linked to the pathogenesis of chronic lung disease" (Frey, 2014a p. 2).

evaluated one or more indicators of inflammation, including neutrophil[46] (PMN) influx, markers of eosinophilic inflammation, increased permeability of the respiratory epithelium, and/or prevalence of proinflammatory molecules (U.S. EPA, 2013a, section 6.2.3.1). Epidemiologic studies have generally evaluated associations between ambient O_3 and markers of inflammation and/or oxidative stress, which plays a key role in initiating and sustaining inflammation (U.S. EPA, 2013a, section 6.2.3.2).

There is an extensive body of evidence from controlled human exposure studies indicating that short-term exposures to O_3 can cause pulmonary inflammation. A single acute exposure (1-4 hours) of humans to moderate concentrations of O_3 (200-600 ppb) while exercising at moderate to heavy intensities resulted in a number of cellular and biochemical changes in the lung, including inflammation characterized by increased numbers of PMNs, increased permeability of the epithelial lining of the respiratory tract, cell damage, and production of proinflammatory molecules (i.e., cytokines and prostaglandins, U.S. EPA, 2006a). A meta-analysis of 21 controlled human exposure studies (Mudway and Kelly, 2004) using varied experimental protocols (80-600 ppb O_3 exposures; 1-6.6 hours exposure duration; light to heavy exercise; bronchoscopy at 0-24 hours post-O_3 exposure) reported that PMN influx in healthy subjects is linearly associated with total O_3 dose.

Several studies, including one published since the last review (Alexis et al., 2010), have reported O_3-induced increases in PMN influx and permeability following exposures at or above

[46] Referred to as either neutrophils or polymorphonuclear neutrophils (or PMNs), these are the most abundant type of white blood cells in mammals. PMNs are recruited to the site of injury following trauma and are the hallmark of acute inflammation. The presence of PMNs in the lung has long been accepted as a hallmark of inflammation and is an important indicator that O_3 causes inflammation in the lungs. Neutrophilic inflammation of tissues indicates activation of the innate immune system and requires a complex series of events, that then are normally followed by processes that clear the evidence of acute inflammation.

80 ppb (Alexis et al., 2010; Peden et al., 1997; Devlin et al., 1991), and eosinophilic inflammation following exposures at or above 160 ppb (Scannell et al., 1996; Peden et al., 1997; Hiltermann et al., 1999; Vagaggini et al., 2002). In addition, one recent controlled human exposure study has reported O_3-induced PMN influx following exposures of healthy adults to 60 ppb O_3 (Kim et al., 2011), the lowest concentration at which inflammatory responses have been evaluated in human studies.

As with FEV_1 responses to O_3, inflammatory responses to O_3 are generally reproducible within individuals, with some individuals experiencing more severe O_3-induced airway inflammation than indicated by group averages (Holz et al., 2005; Holz et al., 1999). Unlike O_3-induced decrements in lung function, which are attenuated following repeated exposures over several days (U.S. EPA, 2013a, section 6.2.1.1), some markers of O_3-induced inflammation and tissue damage remain elevated during repeated exposures, indicating ongoing damage to the respiratory system (U.S. EPA, 2013a, section 6.2.3.1).

Most controlled human exposure studies have reported that asthmatics experience larger O_3-induced inflammatory responses than non-asthmatics.[47] Specifically, asthmatics exposed to 200 ppb O_3 for 4-6 hours with exercise show significantly more neutrophils in bronchoalveolar lavage fluid (BALF) than similarly exposed healthy individuals (Scannell et al., 1996; Basha et al., 1994). Bosson et al. (2003) reported significantly greater expression of a variety of pro-inflammatory cytokines in asthmatics, compared to healthy subjects, following exposure to 200 ppb O_3 for 2 hours. In addition, research available in the last review, combined with a recent study newly available in this review, indicates that pretreatment of asthmatics with

[47] When evaluated, these studies have also reported O_3-induced respiratory symptoms in asthmatics. Specifically, Scannell et al. (1996), Basha et al. (1994), and Vagaggini et al. (2001, 2007) reported increased symptoms in addition to inflammation.

corticosteroids can prevent the O_3-induced inflammatory response in induced sputum, though pretreatment did not prevent FEV_1 decrements (Vagaggini et al., 2001; 2007). In contrast, Stenfors et al. (2002) did not detect a difference in the O_3-induced increases in neutrophil numbers between 15 subjects with mild asthma and 15 healthy subjects by bronchial wash at the 6 hours postexposure time point, although the neutrophil increase in the asthmatic group was on top of an elevated baseline.

In people with allergic airway disease, including people with rhinitis and asthma, evidence available in the last review indicated that proinflammatory mediators also cause accumulation of eosinophils in the airways (Jorres et al., 1996; Peden et al., 1995 and 1997; Frampton et al., 1997; Hiltermann et al., 1999; Holz et al., 2002; Vagaggini et al., 2002). The eosinophil, which increases inflammation and allergic responses, is the cell most frequently associated with exacerbations of asthma (72 FR 37846, July 11, 2007).

Studies reporting inflammatory responses and markers of lung injury have clearly demonstrated that there is important variation in the responses of exposed subjects (72 FR 37831, July 11, 2007). Some individuals also appear to be intrinsically more susceptible to increased inflammatory responses from O_3 exposure (Holz et al., 2005). In healthy adults exposed to each 80 and 100 ppb O_3, Devlin et al. (1991) observed group average increases in neutrophilic inflammation of 2.1- and 3.8-fold, respectively. However, there was a 20-fold range in inflammatory responses between individuals at both concentrations. Relative to an earlier, similar study conducted at 400 ppb (Koren et al., 1989), Devlin et al. (1991) noted that although some of the study population showed little or no increase in inflammatory and cellular injury indicators analyzed after exposures to lower levels of O_3 (i.e., 80 and 100 ppb), others had changes that were as large as those seen when subjects were exposed to 400 ppb O_3. The study

authors concluded that, "while the population as a whole may have a small inflammatory response to near-ambient levels of ozone, there may be a significant subpopulation that is very sensitive to these low levels" (Devlin et al., 1991).

A number of studies report that O_3 exposures increase epithelial permeability. Increased BALF protein, suggesting O_3-induced changes in epithelial permeability, has been reported at 1 hour and 18 hours postexposure (Devlin et al., 1997; Balmes et al., 1996). A meta-analysis of results from 21 publications (Mudway and Kelly, 2004) for varied experimental protocols (80-600 ppb O_3; 1-6.6 hours duration; light to heavy exercise; bronchoscopy at 0-24 hours post-O_3 exposure; healthy subjects), showed that increased BALF protein is associated with total inhaled O_3 dose. As noted in the 2009 PM ISA (U.S. EPA, 2009a), it has been postulated that changes in permeability associated with acute inflammation may provide increased access of inhaled antigens, particles, and other inhaled substances deposited on lung surfaces to the smooth muscle, interstitial cells, immune cells underlying the epithelium, and the blood (U.S. EPA, 2013a, sections 5.3.4, 5.3.5). As has been observed with FEV_1 responses, within individual changes in permeability are correlated with changes following sequential O_3 exposures (Que et al., 2011). Changes in permeability and AHR apear to be mediated by different pathways. Animal toxicology studies have provided some support for this hypothesis (Adamson and Prieditis, 1995; Chen et al., 2006), though these studies did not specifically evaluate O_3 exposures (U.S. EPA, 2009a).

The limited epidemiologic evidence reviewed in the 2006 O_3 AQCD (U.S. EPA, 2006a) reported associations between short-term increases in ambient O_3 concentrations and airways inflammation in children (1-hour max O_3 of approximately 100 ppb). In the 2006 O_3 AQCD (U.S. EPA, 2006a), there was limited evidence for increases in nasal lavage levels of

inflammatory cell counts and molecules released by inflammatory cells (i.e., eosinophilic cationic protein, and myeloperoxidases). Since 2006, as a result of the development of less invasive methods, there has been a large increase in the number of studies assessing ambient O_3-associated changes in airway inflammation and oxidative stress, the types of biological samples collected, and the types of indicators. Most of these recent studies have evaluated biomarkers of inflammation or oxidative stress in exhaled breath, nasal lavage fluid, or induced sputum (U.S. EPA, 2013a, section 6.2.3.2). These recent studies form a larger database to establish coherence with findings from controlled human exposure and animal studies that have measured the same or related biological markers. Additionally, results from these studies provide further biological plausibility for the associations observed between ambient O_3 concentrations and respiratory symptoms and asthma exacerbations.

A number of epidemiologic studies provide evidence that short-term increases in ambient O_3 exposure increase pulmonary inflammation and oxidative stress in children, including those with asthma (Sienra-Monge et al., 2004; Barraza-Villarreal et al., 2008; Romieu et al., 2008; Berhane et al., 2011). Multiple studies examined and found increases in exhaled nitric oxide (eNO)[48] (Berhane et al., 2011; Khatri et al., 2009; Barraza-Villarreal et al., 2008). In some studies of subjects with asthma, increases in ambient O_3 concentration at the same lag were associated with both increases in pulmonary inflammation and respiratory symptoms (Khatri et al., 2009; Barraza-Villarreal et al., 2008). Although more limited in number, epidemiologic studies also found associations with cytokines such as IL-6 or IL-8 (Barraza-Villarreal et al., 2008; Sienra-Monge et al., 2004), eosinophils (Khatri et al., 2009), antioxidants (Sienra-Monge

[48] Exhaled NO has been shown to be a useful biomarker for airway inflammation in large population-based studies (Linn et al., 2009) (U.S. EPA, 2013a, section 7.2.4).

et al., 2004), and indicators of oxidative stress (Romieu et al., 2008) (U.S. EPA, 2013a, section 6.2.3.2). Because associations with inflammation were attenuated with higher antioxidant intake in the study by Sienra-Monge et al. (2004), this study provides additional evidence that inhaled O_3 is likely to be an important source of reactive oxygen species in airways and/or may increase pulmonary inflammation via oxidative stress-mediated mechanisms among all age groups. Limitations in some recent studies have contributed to inconsistent results in adults (U.S. EPA, 2013a, section 6.2.3.2).

Exposure to ambient O_3 on multiple days can result in larger increases in pulmonary inflammation and oxidative stress, as discussed in section 6.2.3.2 of the ISA (U.S. EPA, 2013a). In studies that examined multiple O_3 lags, multiday averages of 8-hour maximum or 8-hour average concentrations were associated with larger increases in pulmonary inflammation and oxidative stress (Berhane et al., 2011; Delfino et al., 2010; Sienra-Monge et al., 2004), consistent with controlled human exposure (U.S. EPA, 2013a, section 6.2.3.1) and animal studies (U.S. EPA, 2013a, section 6.2.3.3) reporting that some markers of pulmonary inflammation remain elevated with O_3 exposures repeated over multiple days. Evidence from animal toxicological studies also clearly indicates that O_3 exposures result in damage and inflammation in the lung (U.S. EPA, 2013a, section 5.3). In the few studies that evaluated the potential for confounding, O_3 effect estimates were not confounded by temperature or humidity, and were robust to adjustment for $PM_{2.5}$ or PM_{10} (Barraza-Villarreal et al., 2008; Romieu et al., 2008; Sienra-Monge et al., 2004).

In conclusion, a relatively small number of controlled human exposure studies evaluating O_3-induced airway inflammation have become available since the last review. For purposes of reviewing the current O_3 NAAQS, the most important of these recent studies reported a

statistically significant increase in airway inflammation in healthy adults at moderate exertion following exposures to 60 ppb O_3, the lowest concentration that has been evaluated for inflammation. In addition, a number of recent epidemiologic studies report O_3-associated increases in markers of pulmonary inflammation, particularly in children. Thus, recent studies continue to support the evidence for airway inflammation and injury that was available in previous reviews, with new evidence for such effects following exposures to lower concentrations than had been evaluated previously.

iii. Airway hyperresponsiveness

Airway hyperresponsiveness (AHR) refers to a condition in which the conducting airways undergo enhanced bronchoconstriction in response to a variety of stimuli. Airway hyperresponsiveness is an important consequence of exposure to ambient O_3 because its presence reflects a change in airway smooth muscle reactivity, and indicates that the airways are predisposed to narrowing upon inhalation of a variety of ambient stimuli including specific triggers (i.e., allergens) and nonspecific triggers (e.g., SO_2, and cold air). People with asthma are generally more sensitive to bronchoconstricting agents than those without asthma, and the use of an airway challenge to inhaled bronchoconstricting agents is a diagnostic test in asthma (U.S. EPA, 2013, section 6.2.2). Standards for airway responsiveness testing have been developed for the clinical laboratory (ATS, 2000), although variation in the methodology for administering the bronchoconstricting agent may affect the results (Cockcroft et al., 2005). There is a wide range of airway responsiveness in people without asthma, and responsiveness is influenced by a number of factors, including cigarette smoke, pollutant exposures, respiratory infections, occupational exposures, and respiratory irritants. Dietary antioxidants have been reported to attenuate O_3-induced bronchial hyperresponsiveness in people with asthma (Trenga et al., 2001).

Evidence for airway hyperresponsiveness (AHR) following O_3 exposures is derived primarily from controlled human exposure and toxicological studies (U.S. EPA, 2013a, section 6.2.2). Airway responsiveness is often quantified by measuring changes in pulmonary function following the inhalation of an aerosolized allergen or a nonspecific bronchoconstricting agent (e.g., methacholine), or following exposure to a bronchoconstricting stimulus such as cold air. In the last review, controlled human exposure studies of mostly adults (≥ 18 years of age) had shown that exposures to O_3 concentrations at or above 80 ppb increase airway responsiveness, as indicated by a reduction in the concentration of specific (e.g., ragweed) and non-specific (e.g., methacholine) agents required to produce a given reduction in lung function (e.g., as measured by FEV_1 or specific airway resistance) (U.S. EPA, 2013a, section 6.2.2.1). This O_3-induced AHR has been reported to be dose-dependent (Horstman et al., 1990). Animal toxicology studies have reported O_3-induced AHR in a number of species, with some rat strains exhibiting hyperresponsiveness following 4-hour exposures to O_3 concentrations as low as 50 ppb (Depuydt et al., 1999). Since the last review, there have been relatively few new controlled human exposure and animal toxicology studies of O_3 and AHR, and no new studies have evaluated exposures to O_3 concentrations at or below 80 ppb (U.S. EPA, 2013a, section 6.2.2.1).

Airway hyperresponsiveness is linked with the accumulation and/or activation of eosinophils in the airways of asthmatics, which is followed by production of mucus and a late-phase asthmatic response (section II.B.4.a.ii). In a study of 16 intermittent asthmatics, Hiltermann et al. (1999) found that there was a significant inverse correlation between the O_3-induced change in the percentage of eosinophils in induced sputum and the concentration of methacholine causing a 20% decrease in FEV_1. Hiltermann et al. (1999) concluded that the results point to the role of eosinophils in O_3-induced AHR. Increases in O_3-induced nonspecific

airway responsiveness incidence and duration could have important clinical implications for children and adults with asthma, such as exacerbations of their disease.

Airway hyperresponsiveness after O_3 exposure appears to resolve more slowly than changes in FEV_1 or respiratory symptoms (Folinsbee and Hazucha, 2000). Studies suggest that O_3-induced AHR usually resolves 18 to 24 hours after exposure, but may persist in some individuals for longer periods (Folinsbee and Hazucha, 1989). Furthermore, in studies of repeated exposure to O_3, changes in AHR tend to be somewhat less susceptible to attenuation with consecutive exposures than changes in FEV_1 (Gong et al., 1997; Folinsbee et al., 1994; Kulle et al., 1982; Dimeo et al., 1981) (U.S. EPA, 2013a, section 6.2.2). In animal studies a 3-day continuous exposure resulted in attenuation of O_3-induced AHR (Johnston et al., 2005) while repeated exposures for 2 hours per day over 10 days did not (Chhabra et al., 2010), suggesting that attenuation could be lost when repeated exposures are interspersed with periods of rest (U.S. EPA, 2013a, section 6.2.2.2).

As mentioned above, in addition to human subjects a number of species, including nonhuman primates, dogs, cats, rabbits, and rodents, have been used to examine the effect of O_3 exposure on AHR , (U.S. EPA, 1996, Table 6-14; and U.S. EPA, 2006a, Annex Table AX5-12, p. AX5-36). A body of animal toxicology studies, including some recent studies conducted since the last review, provides support for the O_3-induced AHR reported in humans (U.S. EPA, 2013a, section 6.2.2.2). Although most of these studies evaluated O_3 concentrations above those typically found in ambient air in cities in the United States (i.e., most studies evaluated O_3 concentrations of 100 ppb or greater), one study reported that a very low exposure concentration (50 ppb for 4 hours) induced AHR in some rat strains (Depuydt et al., 1999). Additional recent rodent studies reported O_3-induced AHR following exposures to O_3 concentrations from 100 to

500 ppb (Johnston et al., 2005; Chhabra et al., 2010; Larsen et al., 2010). In characterizing the relevance of these exposure concentrations, the ISA noted that a study using radiolabeled O_3 suggests that even very high O_3 exposure concentrations in rodents could be equivalent to much lower exposure concentrations in humans. Specifically, a 2000 ppb (2 ppm) O_3 exposure concentration in resting rats was reported to be roughly equivalent to a 400 ppb exposure concentration in exercising humans (Hatch et al., 1994). Given this relationship, the ISA noted that animal data obtained in resting conditions could underestimate the risk of effects for humans (U.S. EPA, 2013a, section 2.4, p. 2-14).

The 2006 AQCD (U.S. EPA, 2006a, p. 6-34) concluded that spirometric responses to O_3 are independent of inflammatory responses and markers of epithelial injury (Balmes et al., 1996; Blomberg et al., 1999; Torres et al., 1997). Significant inflammatory responses to O_3 exposures that did not elicit significant spirometric responses have been reported (Holz et al., 2005). A recent study (Que et al., 2011) indicates that AHR also appears to be mediated by a differing physiologic pathway. These results from controlled human exposure studies indicate that O_3-induced lung function decrements, inflammatory responses and pulmonary injury (leading to increased epithelial permeability), and AHR, are mediated by apparently different physiologic pathways. Except for lung function decrments, we do not have concentration or exposure response information about the other, potentially more sensitive,[49] clinical endpoints (i.e., inflammation, increased epithelial permeability, AHR) that would allow us to quantitatively estimate the size of the population affetcted and the magnitude of their responses.

[49] CASAC noted that "while measures of FEV1 are quantitative and readily obtainable in humans, they are not the only measures — and perhaps not the most sensitive measures — of the adverse health effects induced by ozone exposure." (Henderson, 2006).

In summary, a strong body of controlled human exposure and animal toxicological studies, most of which were available in the last review of the O_3 NAAQS, report O_3-induced AHR after either acute or repeated exposures (U.S. EPA, 2013a, section 6.2.2.2). People with asthma often exhibit increased airway responsiveness at baseline relative to healthy controls, and they can experience further increases in responsiveness following exposures to O_3. Studies reporting increased airway responsiveness after O_3 exposure contribute to a plausible link between ambient O_3 exposures and increased respiratory symptoms in asthmatics, and increased hospital admissions and emergency department visits for asthma (U.S. EPA, 2013a, section 6.2.2.2).

iv. Respiratory symptoms and medication use

Respiratory symptoms are associated with adverse outcomes such as limitations in activity, and are the primary reason for people with asthma to use quick relief medication and seek medical care. Studies evaluating the link between O_3 exposures and such symptoms allow a direct characterization of the clinical and public health significance of ambient O_3 exposure. Controlled human exposure and toxicological studies have described modes of action through which short-term O_3 exposures may increase respiratory symptoms by demonstrating O_3-induced AHR (U.S. EPA, 2013a, section 6.2.2) and pulmonary inflammation (U.S. EPA, 2013a, section 6.2.3).

The link between subjective respiratory symptoms and O_3 exposures has been evaluated in both controlled human exposure and epidemiologic studies, and the link with medication use has been evaluated in epidemiologic studies. In the last review, several controlled human exposure studies reported respiratory symptoms following exposures to O_3 concentrations at or above 80 ppb. In addition, one study reported such symptoms following exposures to 60 ppb O_3,

though the increase was not statistically different from filtered air controls. Epidemiologic studies reported associations between ambient O_3 and respiratory symptoms and medication use in a variety of locations and populations, including asthmatic children living in U.S. cities. In the current review, additional controlled human exposure studies have evaluated respiratory symptoms following exposures to O_3 concentrations below 80 ppb and recent epidemiologic studies have evaluated associations with respiratory symptoms and medication use (U.S. EPA, 2013a, sections 6.2.1, 6.2.4).

In controlled human exposure studies available in the last review as well as newly available studies, statistically significant increases in respiratory symptoms have been reported in healthy adult volunteers engaged in intermittent, moderate exertion following 6.6 hour exposures to average O_3 concentrations of 80 ppb (Adams, 2003; Adams, 2006; Schelegle et al., 2009) and 72 ppb (Schelegle et al., 2009). Such symptoms have been reported to increase with increasing O_3 exposure concentrations, duration of exposure, and activity level (McDonnell et al., 1999).

Results have been less consistent for lower exposure concentrations. A recent study by Schelegle et al. (2009) reported a statistically significant increase in respiratory symptoms in healthy adults following 6.6 hour exposures to an average O_3 concentration of 72 ppb, but not 60 ppb. Kim et al. (2011) also did not find statistically significant increases in respiratory symptoms following exposures of healthy adults to 60 ppb O_3. Adams (2006) reported an increase in respiratory symptoms in healthy adults during a 6.6 hour exposure protocol with an average O_3 exposure concentration of 60 ppb. This increase was significantly different from initial respiratory symptoms, but not from filtered air controls. The findings for O_3-induced respiratory symptoms in controlled human exposure studies, and the evidence integrated across disciplines describing underlying modes of action, provide biological plausibility for epidemiologic

associations observed between short-term increases in ambient O_3 concentration and increases in respiratory symptoms (U.S. EPA, 2013a, section 6.2.4).

In epidemiologic panel studies of respiratory symptoms, data typically are collected by having subjects (or their parents) record symptoms and medication use in a diary without direct supervision by study staff. Several limitations of symptom reports are well recognized, as described in the ISA (U.S. EPA, 2013a, section 6.2.4). Nonetheless, symptom diaries remain a convenient tool to collect individual-level data from a large number of subjects and allow modeling of associations between daily changes in O_3 concentration and daily changes in respiratory morbidity over multiple weeks or months. Importantly, many of the limitations in these studies are sources of random measurement error that can bias effect estimates to the null or increase the uncertainty around effect estimates (U.S. EPA, 2013a, section 6.2.4). Because respiratory symptoms are associated with limitations in activity and daily function and are the primary reason for using medication and seeking medical care, the evidence is directly coherent with the associations consistently observed between increases in ambient O_3 concentration and increases in asthma emergency department visits, discussed below (U.S. EPA, 2013a, section 6.2.4).

Most epidemiologic studies of O_3 and respiratory symptoms and medication use have been conducted in children and/or adults with asthma, with fewer studies, and less consistent results, in non-asthmatic populations (U.S. EPA, 2013a, section 6.2.4). The 2006 AQCD (U.S. EPA, 2006a, U.S. EPA, 2013a, section 6.2.4) concluded that the collective body of epidemiologic evidence indicated that short-term increases in ambient O_3 concentrations are associated with increases in respiratory symptoms in children with asthma. A large body of single-city and single-region studies of asthmatic children provides consistent evidence for

associations between short-term increases in ambient O_3 concentrations and increased respiratory symptoms and asthma medication use in children with asthma (U.S. EPA, 2013a, Figure 6-12, Table 6-20, p. 79).

Methodological differences among studies make comparisons across recent multicity studies of respiratory symptoms difficult. Because of fewer person-days of data (Schildcrout et al., 2006) or examination of 19-day averages of ambient O_3 concentrations (O'Connor et al., 2008), the ISA did not give greater weight to results from recent multicity studies than results from single-city studies (U.S. EPA, 2013a, section 6.2.4.5).[50] While evidence from the few available U.S. multicity studies is less consistent (O'Connor et al., 2008; Schildcrout et al., 2006; Mortimer et al., 2002), the overall body of epidemiologic evidence with respect to the association betweeen exposure to O_3 and respiratory symptoms in asthmatic children remains compelling (U.S. EPA, 2013a, section 6.2.4.1). Findings from a small body of studies indicate that O_3 is also associated with increased respiratory symptoms in adults with asthma (Khatri et al., 2009; Feo Brito et al., 2007; Ross et al., 2002) (U.S. EPA, 2013a, section 6.2.4.2).

Available evidence indicates that O_3-associated increases in respiratory symptoms are not confounded by temperature, pollen, or copollutants (primarily PM) (U.S. EPA, 2013a, section 6.2.4.5; Table 6-25; Romieu et al., 1996; Romieu et al., 1997; Thurston et al., 1997; Gent et al., 2003). However, identifying the independent effects of O_3 in some studies was complicated due to the high correlations observed between O_3 and PM or different lags and averaging times examined for copollutants. Nonetheless, the ISA noted that the robustness of associations in some studies of individuals with asthma, combined with findings from controlled human

[50] Though, as discussed below, for other endpoints (e.g., hospital admissions, emergency department visits) the ISA focused primarily on multicity studies.

exposure studies for the direct effects of O_3 exposure, provide substantial evidence supporting the independent effects of short-term ambient O_3 exposure on respiratory symptoms (U.S. EPA, 2013a, section 6.2.4.5).

Epidemiologic studies of medication use have reported associations with 1-hour maximum O_3 concentrations and with multiday average O_3 concentrations (Romieu et al., 2006; Just et al., 2002). Some studies reported O_3 associations for both respiratory symptoms and asthma medication use (Escamilla-Nuñez et al., 2008; Romieu et al., 2006; Schildcrout et al., 2006; Jalaludin et al., 2004; Romieu et al., 1997; Thurston et al., 1997) while others reported associations for either respiratory symptoms or medication use (Romieu et al., 1996; Rabinovitch et al., 2004; Just et al., 2002; Ostro et al., 2001).

In summary, both controlled human exposure and epidemiologic studies have reported respiratory symptoms attributable to short-term O_3 exposures. In the last review, the majority of the evidence from controlled human exposure studies in young, healthy adults was for symptoms following exposures to O_3 concentrations at or above 80 ppb. Although studies that have become available since the last review have not reported increased respiratory symptoms in young, healthy adults following exposures with moderate exertion to 60 ppb, one recent study did report increased symptoms following exposure to 72 ppb O_3. As was concluded in the 2006 O_3 AQCD (U.S. EPA, 2006a; U.S. EPA, 1996), the collective body of epidemiologic evidence indicates that short-term increases in ambient O_3 concentration are associated with increases in respiratory symptoms in children with asthma (U.S. EPA, 2013a, section 6.2.4). Recent studies of respiratory symptoms and medication use, primarily in asthmatic children, add to this evidence. In a smaller body of studies, increases in ambient O_3 concentration were associated with increases in respiratory symptoms in adults with asthma.

v. Lung host defense

The mammalian respiratory tract has a number of closely integrated defense mechanisms that, when functioning normally, provide protection from the potential health effects of exposures to a wide variety of inhaled particles and microbes. These defense mechanisms include mucociliary clearance, alveolobronchiolar transport mechanism, alveolar macrophages,[51] and adaptive immunity[52] (U.S. EPA, 2013a, section 6.2.5). The previous O_3 AQCD (U.S. EPA, 2006a) concluded that animal toxicological studies provided evidence that acute exposure to O_3 concentrations as low as 100 to 500 ppb can increase susceptibility to infectious diseases due to modulation of these lung host defenses. This conclusion was based, in large part, on animal studies of alveolar macrophage function and mucociliary clearance (U.S. EPA, 2013a, section 6.2.5).

Integrating animal study results with human exposure evidence, the 2006 Criteria Document concluded that available evidence indicates that short-term O_3 exposures have the potential to impair host defenses in humans, primarily by interfering with alveolar macrophage function. Any impairment in alveolar macrophage function may lead to decreased clearance of microorganisms or nonviable particles. Compromised alveolar macrophage functions in asthmatics may increase their susceptibility to other O_3 effects, the effects of particles, and respiratory infections (U.S. EPA, 2006a, p. 8–26). These conclusions were based largely on studies conducted in animals exposed for several hours up to several weeks to O_3 concentrations from 100 to 250 ppb (Hurst et al., 1970; Driscoll et al., 1987; Cohen et al., 2002). Consistent

[51] Phagocytic white blood cells within the alveoli of the lungs that ingest inhaled particles.
[52] The adaptive immune system, is also known as the acquired immune system. Acquired immunity creates immunological memory after an initial response to a specific pathogen, leading to an enhanced response to subsequent encounters with that same pathogen.

with the animal evidence, a controlled human exposure study available in the last review had reported decrements in the ability of alveolar macrophages to phagocytize yeast following exposures of healthy volunteers to O_3 concentrations of 80 and 100 ppb for 6.6 hours during moderate exercise (Devlin et al., 1991).

Alveolobronchiolar transport mechanisms refers to the transport of particles deposited in the deep lung (alveoli) which may be removed either up through the respiratory tract (bronchi) by alveolobronchiolar transport or through the lymphatic system. The pivotal mechanism of alveolobronchiolar transport involves the movement of alveolar macrophages with ingested particles to the bottom of the conducting airways. These airways are lined with ciliated epithelial cells and cells that produce mucous, which surrounds the macrophages. The ciliated epithelial cells move the mucous packets up the resiratory tract, hence the term "mucociliary escalator." Although some studies show reduced tracheobronchial clearance after O_3 exposure (U.S. EPA, 2013a, section 6.2.5.1), alveolar clearance of deposited material is accelerated, presumably due to macrophage influx, which in itself can be damaging.

With regard to adaptive immunity, a limited number of epidemiologic studies have examined associations between O_3 exposure and hospital admissions or emergency department visits for respiratory infection, pneumonia, or influenza. Results have been mixed, and in some cases conflicting (U.S. EPA, 2013a, sections 6.2.7.2 and 6.2.7.3). With the exception of influenza, it is difficult to ascertain whether cases of respiratory infection or pneumonia are of viral or bacterial etiology. A recent study that examined the association between O_3 exposure and respiratory hospital admissions in response to an increase in influenza intensity observed an increase in respiratory hospital admissions (Wong et al., 2009), but information from toxicological studies of O_3 and viral infections is ambiguous.

In summary, relatively few studies conducted since the last review have evaluated the effects of O_3 exposures on lung host defense. When the available evidence is taken as a whole, the ISA concludes that acute O_3 exposures impair the host defense capability of animals, primarily by depressing alveolar macrophage function and perhaps also by decreasing mucociliary clearance of inhaled particles and microorganisms. Coupled with limited evidence from controlled human exposure studies, this suggests that humans exposed to O_3 could be predisposed to bacterial infections in the lower respiratory tract (U.S. EPA, 2013a, section 6.2.5.5).

vi. Allergic and asthma-related responses

Effects resulting from combined exposures to O_3 and allergens have been studied in a variety of animal species, generally as models of experimental asthma. Pulmonary function and AHR in animal models of asthma are discussed in detail in Section 6.2.1.3 and Section 6.2.2.2, respectively, in the ISA (U.S. EPA, 2013a). Studies of allergic and asthma-related responses are discussed in detail in sections 5.3.6 and 6.2.6 of the ISA (U.S. EPA, 2013a).

Evidence available in the last review indicates that O_3 exposure skews immune responses toward an allergic phenotype and could also make airborne allergens more allergenic. In humans, allergic rhinoconjunctivitis symptoms are associated with increases in ambient O_3 concentrations (Riediker et al., 2001). Controlled human exposure studies have observed O_3-induced changes indicating allergic skewing. Airway eosinophils, which are white blood cells that participate in allergic disease and inflammation, were observed to increase in volunteers with atopy[53] and mild asthma (Peden et al., 1997). In a more recent study, expression of IL-5, a cytokine involved in

[53] Atopy is a predisposition toward developing certain allergic hypersensitivity reactions. A person with atopy typically presents with one or more of the following: eczema (atopic dermatitis), allergic rhinitis (hay fever), allergic conjunctivitis, or allergic asthma.

eosinophil recruitment and activation, was increased in subjects with atopy but not in healthy subjects (Hernandez et al., 2010). Epidemiologic studies describe associations between eosinophils in both short- (U.S. EPA, 2013a, section 6.2.3.2) and long-term (U.S. EPA, 2013a, section 7.2.5) O_3 exposure, as do chronic exposure studies in non-human primates. Collectively, findings from these studies suggest that O_3 can induce or enhance certain components of allergic inflammation in individuals with allergy or allergic asthma.

Evidence available in the last review indicates that O_3 may also increase AHR to specific allergen triggers (75 FR 2970, January 19, 2010). Two studies (Jörres et al., 1996; Holz et al., 2002) observed increased airway responsiveness to O_3 exposure with bronchial allergen challenge in subjects with preexisting allergic airway disease. Ozone-induced exacerbation of airway responsiveness persists longer and attenuates more slowly than O_3-induced lung function decrements and respiratory symptom responses and can have important clinical implications for asthmatics. Animal toxicology studies indicate that O_3 enhances inflammatory and allergic responses to allergen challenge in sensitized animals. In addition to exacerbating existing allergic responses, toxicology studies indicate that O_3 can also act as an adjuvant to produce sensitization in the respiratory tract. Along with its pro-allergic effects (inducing or enhancing certain components of allergic inflammation in individuals with allergy or allergic asthma), O_3 could also make airborne allergens more allergenic. When combined with NO_2, O_3 has been shown to enhance nitration of common protein allergens, which may increase their allergenicity (Franze et al., 2005).

vii. Hospital admissions and emergency department visits

The 2006 O_3 AQCD evaluated numerous studies of respiratory-related emergency department visits and hospital admissions. These were primarily time-series studies conducted in

the U.S., Canada, Europe, South America, Australia, and Asia. Based on such studies, the 2006 O_3 AQCD concluded that "the overall evidence supports a causal relationship between acute ambient O_3 exposures and increased respiratory morbidity resulting in increased emergency department visits and [hospital admissions] during the warm season"[54] (U.S. EPA, 2006a). This conclusion was "strongly supported by the human clinical, animal toxicologic[al], and epidemiologic evidence for [O_3-induced] lung function decrements, increased respiratory symptoms, airway inflammation, and airway hyperreactivity" (U.S. EPA, 2006a).

The results of recent studies largely support the conclusions of the 2006 O_3 AQCD (U.S. EPA, 2013a, section 6.2.7). Since the completion of the 2006 O_3 AQCD, relatively fewer studies conducted in the U.S., Canada, and Europe have evaluated associations between short-term O_3 concentrations and respiratory hospital admissions and emergency department visits, with a growing number of studies conducted in Asia. This epidemiologic evidence is discussed in detail in the ISA (U.S. EPA, 2013a, section 6.2.7).[55]

In considering this body of evidence, the ISA focused primarily on multicity studies because they examine associations with respiratory-related hospital admissions and emergency department visits over large geographic areas using consistent statistical methodologies (U.S. EPA, 2013a, section 6.2.7.1). The ISA also focused on single-city studies that encompassed a large number of daily hospital admissions or emergency department visits, included long study-durations, were conducted in locations not represented by the larger studies, or examined

[54] Epidemiologic associations for O_3 are more robust during the warm season than during cooler months (e.g., smaller measurement error, less potential confounding by copollutants). Rationale for focusing on warm season epidemiologic studies for O_3 can be found at 72 FR 37838-37840.
[55] The consideration of ambient O_3 concentrations in the locations of these epidemiologic studies are discussed in sections II.D.1.b and II.E.4.a below, for the current standard and alternative standards, respectively.

population-specific characteristics that may impact the risk of O_3-related health effects but were not evaluated in the larger studies (U.S. EPA, 2013a, section 6.2.7.1). When examining the association between short-term O_3 exposure and respiratory health effects that require medical attention, the ISA distinguishes between hospital admissions and emergency department visits because it is likely that a small percentage of respiratory emergency department visits will be admitted to the hospital; therefore, respiratory emergency department visits may represent potentially less serious, but more common outcomes (U.S. EPA, 2013a, section 6.2.7.1).

Several recent multicity studies (e.g., Cakmak et al., 2006; Dales et al., 2006) and a multi-continent study (Katsouyanni et al., 2009) report associations between short-term O_3 concentrations and increased respiratory-related hospital admissions and emergency department visits. These multicity studies are supported by results from single-city studies also reporting consistent positive associations using different exposure assignment approaches (i.e., average of multiple monitors, single monitor, population-weighted average) and averaging times (i.e., 1-hour max and 8-hour max) (U.S. EPA, 2013a, sections 6.2.7.1 to 6.2.7.5). When examining cause-specific respiratory outcomes, recent studies report positive associations with hospital admissions and emergency department visits for asthma (Strickland et al., 2010; Stieb et al., 2009) and chronic obstructive pulmonary disease (COPD) (Stieb et al., 2009; Medina-Ramon et al., 2006), with more limited evidence for pneumonia (Medina-Ramon et al., 2006; Zanobetti and Schwartz, 2006). In seasonal analyses (U.S. EPA, 2013a, Figure 6-19, Table 6-28), stronger associations were reported in the warm season or summer months, when O_3 concentrations are higher, compared to the cold season, particularly for asthma (Strickland et al., 2010; Ito et al., 2007) and COPD (Medina-Ramon et al., 2006). The available evidence indicates that children

are at greatest risk for effects leading to O_3-associated hospital admissions and emergency department visits (Silverman and Ito, 2010; Mar and Koenig, 2009; Villeneuve et al., 2007).

Although the collective evidence across studies indicates a mostly consistent positive association between O_3 exposure and respiratory-related hospital admissions and emergency department visits, the magnitude of these associations may be underestimated to the extent members of study populations modify their behavior in response to air quality forecasts, and to the extent such behavior modification increases exposure misclassification (U.S. EPA, 2013, Section 4.6.6). Studies examining the potential confounding effects of copollutants have reported that O_3 effect estimates remained relatively robust upon the inclusion of PM and gaseous pollutants in two-pollutant models (U.S. EPA, 2013a, Figure 6-20, Table 6-29). Additional studies that conducted copollutant analyses, but did not present quantitative results, also support these conclusions (Strickland et al., 2010; Tolbert et al., 2007; Medina-Ramon et al., 2006) (U.S. EPA, 2013a, section 6.2.7.5).

In the last review, studies had not evaluated the concentration-response relationship between short-term O_3 exposure and respiratory-related hospital admissions and emergency department visits. A preliminary examination of this relationship in studies that have become available since the last review found no evidence of a deviation from linearity when examining the association between short-term O_3 exposure and asthma hospital admissions (U.S. EPA, 2013a, page 6-157; Silverman and Ito, 2010). In addition, an examination of the concentration-response relationship for O_3 exposure and pediatric asthma emergency department visits found no evidence of a threshold at O_3 concentrations as low as 30 ppb (for daily maximum 8-hour concentrations) (Strickland et al., 2010). However, in both studies there is uncertainty in the

shape of the concentration-response curve at the lower end of the distribution of O_3 concentrations due to the low density of data in this range (U.S. EPA, 2013a, page 6-157).

viii. Respiratory mortality

The controlled human exposure, epidemiologic, and toxicological studies discussed in section 6.2 of the ISA (U.S. EPA, 2013a) provide evidence for respiratory morbidity effects, including emergency department visits and hospital admissions, in response to short-term O_3 exposures. Moreover, evidence from experimental studies indicates multiple potential pathways of respiratory effects from short-term O_3 exposures, which support the continuum of respiratory effects that could potentially result in respiratory-related mortality in adults (U.S. EPA, 2013a, section 6.2.8). The 2006 O_3 AQCD found inconsistent evidence for associations between short-term O_3 concentrations and respiratory mortality (U.S. EPA, 2006a). Although some studies reported a strong positive association between O_3 and respiratory mortality, additional studies reported small associations or no associations. New epidemiologic evidence for respiratory mortality is discussed in detail in section 6.2.8 of the ISA (U.S. EPA, 2013a). The majority of recent multicity studies have reported positive associations between short-term O_3 exposures and respiratory mortality, particularly during the summer months (U.S. EPA, 2013a, Figure 6-36).

Specifically, recent multicity studies from the U.S. (Zanobetti and Schwartz, 2008b), Europe (Samoli et al., 2009), Italy (Stafoggia et al., 2010), and Asia (Wong et al., 2010), as well as a multi-continent study (Katsouyanni et al., 2009), reported associations between short-term O_3 concentrations and respiratory mortality (U.S. EPA, 2013a, Figure 6-37, page 6-259). With respect to respiratory mortality, summer-only analyses were consistently positive and most were statistically significant. All-year analyses had more mixed results, but most were positive.

Of the studies evaluated, only the studies by Katsouyanni et al. (2009) and by Stafoggia et al. (2010) analyzed the potential for copollutant confounding of the O_3-respiratory mortality relationship. Based on the results of these analyses, the ISA concluded that O_3 respiratory mortality risk estimates appear to be moderately to substantially sensitive (e.g., increased or attenuated) to inclusion of PM_{10}. However, in the APHENA study (Katsouyanni et al., 2009), the mostly every-6th-day sampling schedule for PM_{10} in the Canadian and U.S. datasets greatly reduced their sample size and limits the interpretation of these results (U.S. EPA, 2013a, section 6.2.8).

In summary, recent epidemiologic studies support and reinforce the epidemiologic evidence for O_3-associated respiratory hospital admissions and emergency department visits from the last review. In addition, the evidence for associations with respiratory mortality has been strengthened since the last review, with the addition of several large multicity studies. The biological plausibility of the associations reported in these studies is supported by the experimental evidence for respiratory effects.

b. Respiratory effects – long-term

Since the last review, the body of evidence indicating the occurrence of respiratory effects due to long-term O_3 exposure has been strengthened. This evidence is discussed in detail in the ISA (U.S. EPA, 2013a, Chapter 7) and summarized below for new-onset asthma and asthma prevalence, asthma hospital admissions, pulmonary structure and function, and respiratory mortality.

i. New-onset asthma and asthma prevalence

Asthma is a heterogeneous disease with a high degree of temporal variability. The on-set, progression, and symptoms can vary within an individual's lifetime, and the course of asthma

may vary markedly in young children, older children, adolescents, and adults. In the previous review, longitudinal cohort studies that examined associations between long-term O_3 exposures and the onset of asthma in adults and children indicated a direct effect of long-term O_3 exposures on asthma risk in adults (McDonnell et al., 1999, 15-year follow-up; Greer et al., 1993, 10-year follow-up) and effect modification by O_3 in children (McConnell et al., 2002). Since that review, additional studies have evaluated associations with new onset asthma, further informing our understanding of the potential gene-environment interactions, mechanisms, and biological pathways associated with incident asthma.

In children, the relationship between long-term O_3 exposure and new-onset asthma has been extensively studied in the Children's Health Study (CHS), a long-term study that was initiated in the early 1990's which has evaluated effects in several cohorts of children. The CHS was initially designed to examine whether long-term exposure to ambient pollution was related to chronic respiratory outcomes in children in 12 communities in southern California. In the CHS, new-onset asthma was classified as having no prior history of asthma at study entry with subsequent report of physician-diagnosed asthma at follow-up, with the date of onset assigned to be the midpoint of the interval between the interview date when asthma diagnosis was first reported and the previous interview date. The results of one study (McConnell et al., 2002) available in the previous review indicated that within high O_3 communities, asthma risk was 3.3 times greater for children who played three or more outdoor sports as compared with children who played no sports.

For this review, as discussed in section 7.2.1.1 of the ISA (U.S. EPA, 2013a), recent studies from the CHS provide evidence for gene-environment interactions in effects on new-onset asthma by indicating that the lower risks associated with specific genetic variants are found

in children who live in lower O_3 communities. These studies indicate that the risk for new-onset asthma is related in part to genetic susceptibility, as well as behavioral factors and environmental exposure. The onset of a chronic disease, such as asthma, is partially the result of a sequence of biochemical reactions involving exposures to various environmental agents metabolized by enzymes related to a number of different genes. Oxidative stress has been proposed to underlie the mechanistic hypotheses related to O_3 exposure. Genetic variants may impact disease risk directly, or modify disease risk by affecting internal dose of pollutants and other environmental agents and/or their reaction products, or by altering cellular and molecular modes of action. Understanding the relation between genetic polymorphisms and environmental exposure can help identify high-risk subgroups in the population and provide better insight into pathway mechanisms for these complex diseases.

The CHS analyses (Islam et al., 2008; Islam et al., 2009; Salam et al., 2009) have found that asthma risk is related to interactions between O_3 and variants in genes for enzymes such as heme-oxygenase (HO-1), arginases (ARG1 and 2), and glutathione S transferase P1 (GSTP1). Biological plausibility for these findings is provided by evidence that these enzymes have antioxidant and/or anti-inflammatory activity and participate in well-recognized modes of action in asthma pathogenesis. As O_3 is a source of oxidants in the airways, oxidative stress serves as the link among O_3 exposure, enzyme activity, and asthma. Further, several lines of evidence demonstrate that secondary oxidation products of O_3 initiate the key modes of action that mediate downstream health effects (U.S. EPA, 2013a, section 5.3). For example, HO-1 responds rapidly to oxidants, has anti-inflammatory and antioxidant effects, relaxes airway smooth muscle, and is induced in the airways during asthma. Cross-sectional studies by Akinbami et al. (2010) and Hwang et al. (2005) provide further evidence relating O_3 exposures with asthma

prevalence. Gene-environment interactions are discussed in detail in Section 5.4.2.1 in the ISA (U.S. EPA, 2013a).

ii. Asthma hospital admissions

In the 2006 AQCD, studies on O_3-related hospital discharges and emergency department visits for asthma and respiratory disease mainly looked at short-term (daily) metrics. The short-term O_3 studies presented in section 6.2.7.5 of the ISA (U.S. EPA, 2013a) and discussed above in section 3.1.2.1 continue to indicate that there is evidence for increases in both hospital admissions and emergency department visits in children and adults related to all respiratory outcomes, including asthma, with stronger associations in the warm months. New studies, discussed in section 7.2.2 of the ISA (U.S. EPA, 2013a) also evaluated long-term O_3 exposure metrics, providing a new line of evidence that suggests a positive exposure-response relationship between the first hospital admission for asthma and long-term O_3 exposure, although the ISA cautions in attributing the associations in that study to long-term exposures since there is potential for short-term exposures to contribute to the observed associations.

Evidence associating long-term O_3 exposure to first asthma hospital admission in a positive concentration-response relationship is provided in a retrospective cohort study (Lin et al., 2008b). This study investigated the association between chronic exposure to O_3 and childhood asthma admissions by following a birth cohort of more than 1.2 million babies born in New York State (1995-1999) to first asthma admission or until December 31, 2000. Three annual indicators (all 8-hour maximum from 10:00 a.m. to 6:00 p.m.) were used to define chronic O_3 exposure: (1) mean concentration during the follow-up period (41.06 ppb); (2) mean concentration during the O_3 season (50.62 ppb); and (3) proportion of follow-up days with O_3 levels >70 ppb. The effects of copollutants were controlled, and interaction terms were used to

assess potential effect modifications. A positive association between chronic exposure to O_3 and childhood asthma hospital admissions was observed, indicating that children exposed to high O_3 levels over time are more likely to develop asthma severe enough to be admitted to the hospital. The various factors were examined and differences were found for younger children (1-2 years), poor neighborhoods, Medicaid/self-paid births, geographic region and others. As shown in the ISA, Figure 7-3 (U.S. EPA, 2013a, p. 7-16), positive concentration-response relationships were observed. Asthma admissions were significantly associated with increased O_3 levels for all chronic exposure indicators.

In considering the relationship between long-term pollutant exposures and chronic disease health endpoints, where chronic pathologies are found with acute expression of chronic disease, Künzli (2012) hypothesizes that if the associations of pollution with events are much larger in the long-term studies, it provides some indirect evidence that air pollution increases the pool of subjects with chronic disease, and that more acute events are to be expected to be seen for higher exposures. The results of Lin et al (2008a) for first asthma hospital admission, presented in Figure 7-3 (U.S. EPA, 2013a, p. 7-16), show effects estimates that are larger than those reported in a study of childhood asthma hospital admission in New York State (Silverman and Ito, 2010), discussed above. The ISA (U.S. EPA, 2013a, p. 7-16) notes that this provides some support for the hypothesis that O_3 exposure may not only have triggered the events but also increased the pool of asthmatic children, but cautions in attributing the associations in the Lin et al. (2008) study to long-term exposures since there is potential for short-term exposures to contribute to the observed associations.

iii. Pulmonary structure and function

In the 2006 O_3 AQCD, few epidemiologic studies had investigated the effect of chronic O_3 exposure on pulmonary function. The definitive 8-year follow-up analysis of the first cohort of the CHS (U.S. EPA, 2013a, section 7.2.3.1) provided little evidence that long-term exposure to ambient O_3 was associated with significant deficits in the growth rate of lung function in children. The strongest evidence was for medium-term effects of extended O_3 exposures over several summer months on lung function (FEV_1) in children, i.e., reduced lung function growth being associated with higher ambient O_3 levels. Short-term O_3 exposure studies presented in the ISA (U.S. EPA, 2013a, section 6.2.1.2) provide a cumulative body of epidemiologic evidence that strongly supports associations between ambient O_3 exposure and decrements in lung function among children. A later CHS study (Islam et al., 2007) included in this review (U.S. EPA, 2013a, section 7.2.3.1) also reported no substantial differences in the effect of O_3 on lung function. However, in a more recent CHS study, Breton et al. (2011) hypothesized that genetic variation in genes on the glutathione metabolic pathway may influence the association between ambient air pollutant exposures and lung function growth in children, and found that variation in the GSS locus was associated with differences in risk of children for lung function growth deficits associated ambient air pollutants, including O_3. A recent study (Rojas-Martinez et al., 2007) of long-term exposure to O_3, described in section 7.2.3.1 of the ISA (U.S. EPA, 2013a, p. 7-19), observed a relationship with pulmonary function declines in school-aged children where O_3 and other pollutant levels were higher (90 ppb at high end of the range) than those in the CHS. Two studies of adult cohorts provide mixed results where long-term exposures were at the high end of the range.

Long-term studies in animals allow for greater insight into the potential effects of prolonged exposure to O_3 that may not be easily measured in humans, such as structural changes

in the respiratory tract. Despite uncertainties, epidemiologic studies observing associations of O_3 exposure with functional changes in humans can attain biological plausibility in conjunction with long-term toxicological studies, particularly O_3-inhalation studies performed in non-human primates whose respiratory systems most closely resemble that of the human. An important series of studies, discussed in section 7.2.3.2 of the ISA (U.S. EPA, 2013a), have used nonhuman primates to examine the effect of O_3 alone, or in combination with an inhaled allergen, house dust mite antigen (HDMA), on morphology and lung function. Animals exhibit the hallmarks of allergic asthma defined for humans (NHLBI, 2007). These studies and others have demonstrated changes in pulmonary function and airway morphology in adult and infant nonhuman primates repeatedly exposed to environmentally relevant concentrations of O_3 (U.S. EPA, 2013a, section 7.2.3.2).

The initial observations in adult nonhuman primates have been expanded in a series of experiments using infant rhesus monkeys repeatedly exposed to 0.5 ppm O_3 starting at 1 month of age (Plopper et al., 2007; Schelegle et al. 2003). The purpose of these studies was to determine if a cyclic regimen of O_3 inhalation would amplify the allergic responses and structural remodeling associated with allergic sensitization and inhalation in the infant rhesus monkey; they provide evidence of an O_3-induced change in airway resistance and responsiveness provides biological plausibility of long-term exposure, or repeated short-term exposures, to O_3 contributing to the effects of asthma in children.

In addition, significant structural changes in the respiratory tract development, during which conducting airways increase in diameter and length, have been observed in infant rhesus monkeys after cyclic exposure to O_3 (Fanucchi et al., 2006). These effects are noteworthy because of their potential contribution to airway obstruction and AHR which are central features

of asthma. A number of studies in both non-human primates and rodents demonstrate that O_3 exposure can increase collagen synthesis and deposition, including fibrotic-like changes in the lung (U.S. EPA, 2013a, section 7.2.3.2).

Collectively, evidence from animal studies strongly suggests that chronic O_3 exposure is capable of damaging the distal airways and proximal alveoli, resulting in lung tissue remodeling and leading to apparent irreversible changes. Potentially, persistent inflammation and interstitial remodeling play an important role in the progression and development of chronic lung disease. Further discussion of the modes of action that lead to O_3-induced morphological changes can be found in section 5.3.7 of the ISA (U.S. EPA, 2013a). Discussion of mechanisms involved in lifestage susceptibility and developmental effects can be found in section 5.4.2.4 of the ISA (U.S. EPA, 2013a). The findings reported in chronic animal studies offer insight into potential biological mechanisms for the suggested association between seasonal O_3 exposure and reduced lung function development in children as observed in epidemiologic studies (U.S. EPA, 2013a, section 7.2.3.1).

iv. Respiratory mortality

A limited number of epidemiologic studies have assessed the relationship between long-term exposure to O_3 and mortality in adults. The 2006 O_3 AQCD concluded that an insufficient amount of evidence existed "to suggest a causal relationship between chronic O_3 exposure and increased risk for mortality in humans" (U.S. EPA, 2006a). Though total and cardio-pulmonary mortality were considered in these studies, respiratory mortality was not specifically considered.

In the most recent follow-up analysis of the American Cancer Society (ACS) cohort (Jerrett et al., 2009), cardiopulmonary deaths were separately subdivided into respiratory and cardiovascular deaths, rather than combined as in the Pope et al. (2002) work. Increased O_3

exposure was associated with the risk of death from respiratory causes, and this effect was robust to the inclusion of $PM_{2.5}$. The association between increased O_3 concentrations and increased risk of death from respiratory causes was insensitive to the use of different models and to adjustment for several ecologic variables considered individually. The authors reported that when seasonal averages of 1-hour daily maximum O_3 concentrations ranged from 33 to 104 ppb, there was no statistical deviation from a linear concentration-response relationship between O_3 and respiratory mortality across 96 U.S. cities (U.S. EPA, 2013a, section 7.7). However, the authors also evaluated the degree to which models incorporating thresholds provided a better fit to the data. Based on these analyses, Jerrett et al. (2009) reported "limited evidence" for an effect threshold at an O_3 concentration of 56 ppb (p=0.06).

Additionally, a recent multicity time series study (Zanobetti and Schwartz, 2011), which followed (from 1985 to 2006) four cohorts of Medicare enrollees with chronic conditions that might predispose to O_3-related effects, observed an association between long-term (warm season) exposure to O_3 and elevated risk of mortality in the cohort that had previously experienced an emergency hospital admission due to COPD. A key limitation of this study is the inability to control for $PM_{2.5}$, because data were not available in these cities until 1999.

c. Cardiovascular effects

A relatively small number of studies have examined the potential effect of short-term O_3 exposure on the cardiovascular system. The 2006 O_3 AQCD (U.S. EPA, 2006a, p. 8-77) concluded that "O_3 directly and/or indirectly contributes to cardiovascular-related morbidity," but added that the body of evidence was limited. This conclusion was based on a controlled human exposure study that included hypertensive adult males; a few epidemiologic studies of

physiologic effects, heart rate variability, arrhythmias, myocardial infarctions, and hospital admissions; and toxicological studies of heart rate, heart rhythm, and blood pressure.

More recently, the body of scientific evidence available that has examined the effect of O_3 on the cardiovascular system has expanded. There is an emerging body of animal toxicological evidence demonstrating that short-term exposure to O_3 can lead to autonomic nervous system alterations (in heart rate and/or heart rate variability) and suggesting that proinflammatory signals may mediate cardiovascular effects. Interactions of O_3 with respiratory tract components result in secondary oxidation product formation and subsequent production of inflammatory mediators, which have the potential to penetrate the epithelial barrier and to initiate toxic effects systemically. In addition, animal toxicological studies of long-term exposure to O_3 provide evidence of enhanced atherosclerosis and ischemia/reperfusion (I/R) injury, corresponding with development of a systemic oxidative, proinflammatory environment. Recent experimental and epidemiologic studies have investigated O_3-related cardiovascular events and are summarized in section 6.3 of the ISA (U.S. EPA, 2013a). Overall, the ISA summarized the evidence in this review as follows (U.S. EPA, 2013a, p. 6-211).

> In conclusion, animal toxicological studies demonstrate O_3-induced cardiovascular effects, and support the strong body of epidemiologic evidence indicating O_3-induced cardiovascular mortality. Animal toxicological and controlled human exposure studies provide evidence for biologically plausible mechanisms underlying these O_3-induced cardiovascular effects. However, a lack of coherence with epidemiologic studies of cardiovascular morbidity remains an important uncertainty.

Controlled human exposure studies discussed in previous AQCDs have not demonstrated any consistent extrapulmonary effects. In this review, evidence from controlled human exposure studies suggests cardiovascular effects in response to short-term O_3 exposure (U.S. EPA, 2013a, section 6.3.1) and provides some coherence with evidence from animal toxicology studies. Controlled human exposure studies also support the animal toxicological studies by

demonstrating O_3-induced effects on blood biomarkers of systemic inflammation and oxidative stress, as well as changes in biomarkers that can indicate the potential for increased clotting following O_3 exposures. Increases and decreases in high frequency heart rate variability (HRV) have been reported following relatively low (120 ppb during rest) and high (300 ppb with exercise) O_3 exposures, respectively. These changes in cardiac function observed in animal and human studies provide preliminary evidence for O_3-induced modulation of the autonomic nervous system through the activation of neural reflexes in the lung (U.S. EPA 2013a, section 5.3.2).

Overall, the ISA concludes that the available body of epidemiologic evidence examining the relationship between short-term exposures to O_3 concentrations and cardiovascular morbidity is inconsistent (U.S. EPA, 2013a, section 6.3.2.9). Across studies, different definitions (i.e., ICD-9 diagnostic codes) were used for both all-cause and cause-specific cardiovascular morbidity (U.S. EPA, 2013a, Tables 6-35 to 6-39), which may contribute to inconsistency in results. However, within diagnostic categories, no consistent pattern of association was found with O_3. Generally, the epidemiologic studies used nearest air monitors to assess O_3 concentrations, with a few exceptions that used modeling or personal exposure monitors. The inconsistencies in the associations observed between short-term O_3 and cardiovascular disease (CVD) morbidities are unlikely to be explained by the different exposure assignment methods used (U.S. EPA, 2013a, section 4.6). The wide variety of biomarkers considered and the lack of consistency among definitions used for specific cardiovascular disease endpoints (e.g., arrhythmias, HRV) make comparisons across studies difficult.

Despite the inconsistent evidence for an association between O_3 concentration and CVD morbidity, mortality studies indicate a consistent positive association between short-term O_3

exposure and cardiovascular mortality in multicity studies and in a multi-continent study. When examining mortality due to CVD, epidemiologic studies consistently observe positive associations with short-term exposure to O_3. Additionally, there is some evidence for an association between long-term exposure to O_3 and mortality, although the association between long-term ambient O_3 concentrations and cardiovascular mortality can be confounded by other pollutants (U.S. EPA, 2013a). The ISA (U.S. EPA 2013a, section 6.3.4) states that taken together, the overall body of evidence across the animal and human studies is sufficient to conclude that there is likely to be a causal relationship between relevant short-term exposures to O_3 and cardiovascular system effects.

d. Total Mortality

The 2006 O_3 AQCD concluded that the overall body of evidence was highly suggestive that short-term exposure to O_3 directly or indirectly contributes to nonaccidental and cardiopulmonary-related mortality in adults, but additional research was needed to more fully establish underlying mechanisms by which such effects occur (U.S. EPA, 2013a, p. 2-18). In building on the 2006 evidence for mortality, the ISA states the following (U.S. EPA, 2013a, p. 6-261).

> The evaluation of new multicity studies that examined the association between short-term O_3 exposures and mortality found evidence that supports the conclusions of the 2006 AQCD. These new studies reported consistent positive associations between short-term O_3 exposure and all-cause (nonaccidental) mortality, with associations persisting or increasing in magnitude during the warm season, and provide additional support for associations between O_3 exposure and cardiovascular and respiratory mortality.

The 2006 O_3 AQCD reviewed a large number of time-series studies of associations between short-term O_3 exposures and total mortality including single- and multicity studies, and meta-analyses. In the large U.S. multicity studies that examined all-year data, effect estimates

corresponding to single-day lags ranged from a 0.5-1% increase in all-cause (nonaccidental) total mortality per a 20 ppb (24-hour), 30 ppb (8-hour maximum), or 40 ppb (1-hour maximum) increase in ambient O_3 (U.S. EPA, 2013a, section 6.6.2). Available studies reported some evidence for heterogeneity in O_3 mortality risk estimates across cities and across studies. Studies that conducted seasonal analyses reported larger O_3 mortality risk estimates during the warm or summer season. Overall, the 2006 O_3 AQCD identified robust associations between various measures of daily ambient O_3 concentrations and all-cause mortality, which could not be readily explained by confounding due to time, weather, or copollutants. With regard to cause-specific mortality, consistent positive associations were reported between short-term O_3 exposure and cardiovascular mortality, with less consistent evidence for associations with respiratory mortality. The majority of the evidence for associations between O_3 and cause-specific mortality were from single-city studies, which had small daily mortality counts and subsequently limited statistical power to detect associations. The 2006 O_3 AQCD concluded that "the overall body of evidence is highly suggestive that O_3 directly or indirectly contributes to nonaccidental and cardiopulmonary-related mortality" (U.S. EPA, 2013a, section 6.6.1).

Recent studies have strengthened the body of evidence that supports the association between short-term O_3 concentrations and mortality in adults. This evidence includes a number of studies reporting associations with nonaccidental as well as cause-specific mortality. Multi-continent and multicity studies have consistently reported positive and statistically significant associations between short-term O_3 concentrations and all-cause mortality, with evidence for larger mortality risk estimates during the warm or summer months (U.S. EPA, 2013a, Figure 6-27; Table 6-42). Similarly, evaluations of cause-specific mortality have reported consistently

positive associations with O_3, particularly in analyses restricted to the warm season (U.S. EPA, 2013a, Figure 6-37; Table 6-53).[56]

In assessing the evidence for O_3-related mortality, the 2006 AQCD also noted that multiple uncertainties remained regarding the relationship between short-term O_3 concentrations and mortality, including the extent of residual confounding by copollutants; characterization of the factors that modify the O_3-mortality association; the appropriate lag structure for identifying O_3-mortality effects; and the shape of the O_3-mortality concentration-response function and whether a threshold exists. Many of the studies, published since the last review, have attempted to address one or more of these uncertainties. The ISA (U.S. EPA, 2013a, section 6.6.2) discusses the extent to which recent studies have evaluated these uncertainties in the relationship between O_3 and mortality.

In particular, recent studies have evaluated different statistical approaches to examine the shape of the O_3-mortality concentration-response relationship and to evaluate whether a threshold exists for O_3-related mortality. In an analysis of the National Morbidity and Mortality Air Pollution Study (NMMAPS) data, Bell et al. (2006) evaluated the potential for a threshold in the O_3-mortality relationship. The authors reported positive and statistically significant associations with mortality in a variety of restricted analyses, including analyses restricted to days with 24-hour area-wide average O_3 concentrations below 60, 55, 50, 45, 40, 35, and 30 ppb. In these restricted analyses O_3 effect estimates were of similar magnitude, were statistically significant, and had similar statistical precision. In analyses restricted to days with 24-hour average O_3 concentrations below 25 ppb, the O_3 effect estimate was similar in magnitude to the effect estimates resulting from analyses with the higher cutoffs, but had somewhat lower

[56] Respiratory mortality is discussed in more detail above.

statistical precision, with the estimate approaching statistical significance (i.e., based on observation of Figure 2 in Bell et al., 2006). In analyses restricted to days with lower 24-hour average O_3 concentrations (i.e., below 20 and 15 ppb), effect estimates were similar in magnitude to analyses with higher cutoffs, but with notably less statistical precision, and were not statistically significant (i.e., confidence intervals included the null, indicating no O_3-associated mortality, based on observation of Figure 2 in Bell et al., 2006). Ozone was no longer positively associated with mortality when the analysis was restricted to days with 24-hour O_3 concentrations below 10 ppb. Given the relatively small number of days included in these restricted analyses, especially for cut points of 20 ppb and below,[57] statistical uncertainty is increased.

Bell et al. (2006) also evaluated the shape of the concentration-response relationship between O_3 and mortality. Although the results of this analysis suggested the lack of threshold in the O_3-mortality relationship, the ISA noted that it is difficult to interpret such a curve because: (1) there is uncertainty around the shape of the concentration-response curve at 24-hour average O_3 concentrations generally below 20 ppb; and (2) the concentration-response curve does not take into consideration the heterogeneity in O_3-mortality risk estimates across cities (U.S. EPA, 2013a, section 6.6.2.3).

Several additional studies have used the NMMAPS dataset to evaluate the concentration-response relationship between short-term O_3 concentrations and mortality. For example, using the same data as Bell et al. (2006), Smith et al. (2009) conducted a subset analysis, but instead of restricting the analysis to days with O_3 concentrations below a cutoff, the authors only included

[57] For example, Bell et al. (2006) reported that for analyses restricted to 24-hour O_3 concentrations at or below 20 ppb, 73% of days were excluded on average across the 98 communities.

days *above* a defined cutoff (cutoffs from 15 and 60 ppb). The results of this analysis were consistent with those reported by Bell et al. (2006). Specifically, the authors reported consistent positive associations for all cutoff concentrations up to concentrations where the total number of days available were so limited that the variability around the central estimate was increased (i.e., cutoff values at or above about 50 ppb) (U.S. EPA, 2013a, section 6.6.2.3). In addition, using NMMAPS data for 1987-1994 for Chicago, Pittsburgh, and El Paso, Xia and Tong (2006) reported evidence for a threshold around a 24-hour average O_3 concentration of 25 ppb, though the threshold values estimated in the analysis were sometimes in the range of where data density was low (U.S. EPA, 2013a, section 6.6.2.3). Stylianou and Nicolich (2009) examined the existence of thresholds following an approach similar to Xia and Tong (2006) using data from NMMAPS for nine major U.S. cities (i.e., Baltimore, Chicago, Dallas/Fort Worth, Los Angeles, Miami, New York, Philadelphia, Pittsburgh, and Seattle) for the years 1987-2000. The authors reported that the estimated O_3-mortality risks varied across the nine cities, with the models exhibiting apparent thresholds in the 10-45 ppb range for O_3 (24-hour average). However, given the city-to-city variation in risk estimates, combining the city-specific estimates into an overall estimate complicates the interpretation of the results. Additional studies in Europe, Canada, and Asia did not report the existence of a threshold (Katsouyanni et al., 2009), with inconsistent and/or inconclusive results across cities, or a non-linear relationship in the O_3-mortality concentration-response curve (Wong et al., 2010).

3. Adversity of O_3 Effects

In making judgments as to when various O_3-related effects become regarded as adverse to the health of individuals, in previous NAAQS reviews, the EPA has relied upon the guidelines published by the American Thoracic Society (ATS) and the advice of CASAC. In 2000, the ATS

published an official statement on "What Constitutes an Adverse Health Effect of Air Pollution?" (ATS, 2000), which updated and built upon its earlier guidance (ATS, 1985). The earlier guidance defined adverse respiratory health effects as "medically significant physiologic changes generally evidenced by one or more of the following: (1) interference with the normal activity of the affected person or persons, (2) episodic respiratory illness, (3) incapacitating illness, (4) permanent respiratory injury, and/or (5) progressive respiratory dysfunction," while recognizing that perceptions of "medical significance" and "normal activity" may differ among physicians, lung physiologists and experimental subjects (ATS, 1985). The 2000 ATS guidance builds upon and expands the 1985 definition of adversity in several ways. The guidance concludes that transient, reversible loss of lung function in combination with respiratory symptoms should be considered adverse. There is also a more specific consideration of population risk (ATS, 2000). Exposure to air pollution that increases the risk of an adverse effect to the entire population is adverse, even though it may not increase the risk of any individual to an unacceptable level. For example, a population of asthmatics could have a distribution of lung function such that no individual has a level associated with clinically important impairment. Exposure to air pollution could shift the distribution to lower levels that still do not bring any individual to a level that is associated with clinically relevant effects. However, this would be considered to be adverse because individuals within the population would have diminished reserve function, and therefore would be at increased risk to further environmental insult (U.S. EPA, 2013a, p. lxxi; and 75 FR at 35526/2, June 22, 2010).

The ATS also concluded that elevations of biomarkers such as cell types, cytokines and reactive oxygen species may signal risk for ongoing injury and more serious effects or may simply represent transient responses, illustrating the lack of clear boundaries that separate

adverse from nonadverse events. More subtle health outcomes also may be connected mechanistically to health effects that are clearly adverse, so that small changes in physiological measures may not appear clearly adverse when considered alone, but may be part of a coherent and biologically plausible chain of related health outcomes that include responses that are clearly adverse, such as mortality (U.S. EPA, 2014c, section 3.1.2.1).

In this review, the new evidence provides further support for relationships between O_3 exposures and a spectrum of health effects, including effects that meet the ATS criteria for being adverse (ATS, 1985 and 2000). The ISA determination that there is a causal relationship between short-term O_3 exposure and a full range of respiratory effects, including respiratory morbidity (e.g., lung function decrements, respiratory symptoms, inflammation, hospital admissions, and emergency department visits) and mortality, provides support for concluding that short-term O_3 exposure is associated with adverse effects (U.S. EPA, 2013a, section 2.5.2). Overall, including new evidence of cardiovascular system effects, the evidence supporting an association between short-term O_3 exposures and total (nonaccidental, cardiopulmonary) respiratory mortality is stronger in this review (U.S. EPA, 2013a, section 2.5.2). And the judgment of likely causal associations between long-term measures of O_3 exposure and respiratory effects such as new-onset asthma, prevalence of asthma, asthma symptoms and control, and asthma hospital admissions provides support for concluding that long-term O_3 exposure is associated with adverse effects ranging from episodic respiratory illness to permanent respiratory injury or progressive respiratory decline (U.S. EPA, 2013a, section 7.2.8).

Application of the ATS guidelines to the least serious category of effects related to ambient O_3 exposures, which are also the most numerous and, therefore, are also potentially important from a public health perspective, involves judgments about which medical experts on

CASAC panels and public commenters have in the past expressed diverse views. To help frame such judgments, in past reviews, the EPA has defined gradations of individual functional responses (e.g., decrements in FEV_1 and airway responsiveness) and symptomatic responses (e.g., cough, chest pain, wheeze), together with judgments as to the potential impact on individuals experiencing varying degrees of severity of these responses. These gradations were used in the 1997 O_3 NAAQS review and slightly revised in the 2008 review (U.S. EPA, 1996, p. 59; 2007, p.3-72; 72 FR 37849, July 11, 2007). These gradations and impacts are summarized in Tables 3-2 and 3-3 in the 2007 O_3 Staff Paper (U.S. EPA, 2007, pp.3-74 to 3-75).

For active healthy people, including children, moderate levels of functional responses (e.g., FEV_1 decrements of ≥ 10% but < 20%, lasting 4 to 24 hours) and/or moderate symptomatic responses (e.g., frequent spontaneous cough, marked discomfort on exercise or deep breath, lasting 4 to 24 hours) would likely interfere with normal activity for relatively few sensitive individuals (U.S. EPA, 2007, p.3-72; 72 FR 37849, July 11, 2007); whereas large functional responses (e.g., FEV_1 decrements ≥ 20%, lasting longer than 24 hours) and/or severe symptomatic responses (e.g., persistent uncontrollable cough, severe discomfort on exercise or deep breath, lasting longer than 24 hours) would likely interfere with normal activities for many sensitive individuals (U.S. EPA, 2007, p.3-72; 72 FR 37849, July 11, 2007) and, therefore, would be considered adverse under ATS guidelines. For the purpose of estimating potentially adverse lung function decrements in active healthy people in the 2008 O_3 NAAQS review, the CASAC panel for that review indicated that a focus on the mid to upper end of the range of moderate levels of functional responses is most appropriate (e.g., FEV_1 decrements ≥ 15% but < 20%) (Henderson, 2006; U.S. EPA, 2007, p. 3-76). In this review, CASAC concurred that the "[e]stimation of FEV_1 decrements of ≥15% is appropriate as a scientifically relevant surrogate

for adverse health outcomes in active healthy adults" (Frey, 2014c, p. 3). However, for children and adults with lung disease, even moderate functional (e.g., FEV_1 decrements ≥ 10% but < 20%, lasting up to 24 hours) or symptomatic responses (e.g., frequent spontaneous cough, marked discomfort on exercise or with deep breath, wheeze accompanied by shortness of breath, lasting up to 24 hours) would likely interfere with normal activity for many individuals, and would likely result in additional and more frequent use of medication (U.S. EPA, 2007, p.3-72; 72 FR 37849, July 11, 2007). For people with lung disease, large functional responses (e.g., FEV_1 decrements ≥ 20%, lasting longer than 24 hours) and/or severe symptomatic responses (e.g., persistent uncontrollable cough, severe discomfort on exercise or deep breath, persistent wheeze accompanied by shortness of breath, lasting longer than 24 hours) would likely interfere with normal activity for most individuals and would increase the likelihood that these individuals would seek medical treatment (U.S. EPA, 2007, p.3-72; 72 FR 37849, July 11, 2007). In the last O_3 NAAQS review, for the purpose of estimating potentially adverse lung function decrements in people with lung disease the CASAC panel indicated that a focus on the lower end of the range of moderate levels of functional responses is most appropriate (e.g., FEV_1 decrements ≥10%) (Henderson, 2006; U.S. EPA, 2007, p. 3-76). In addition, in their letter advising the Administrator on the reconsideration of the 2008 final decision, CASAC stated that "[a] 10% decrement in FEV1 can lead to respiratory symptoms, especially in individuals with pre-existing pulmonary or cardiac disease. For example, people with chronic obstructive pulmonary disease have decreased ventilatory reserve (i.e., decreased baseline FEV_1) such that a ≥10% decrement could lead to moderate to severe respiratory symptoms" (Samet, 2011). In this review, CASAC concurred that "[a]n FEV1 decrement of ≥10% is a scientifically relevant surrogate for adverse health outcomes for people with asthma and lung disease" (Frey, 2014c, p. 3).

In judging the extent to which these impacts represent effects that should be regarded as adverse to the health status of individuals, in previous NAAQS reviews, the EPA has also considered whether effects were experienced repeatedly during the course of a year or only on a single occasion (U.S. EPA, 2007). Although some experts would judge single occurrences of moderate responses to be a nuisance, especially for healthy individuals, a more general consensus view of the adversity of such moderate responses emerges as the frequency of occurrence increases. Thus it has been judged that repeated occurrences of moderate responses, even in otherwise healthy individuals, may be considered to be adverse since they could well set the stage for more serious illness (61 FR 65723). The CASAC panel in the 1997 NAAQS review expressed a consensus view that these "criteria for the determination of an adverse physiological response were reasonable" (Wolff, 1995). In the review completed in 2008, estimates of repeated occurrences continued to be an important public health policy factor in judging the adversity of moderate lung function decrements in healthy and asthmatic people (72 FR 37850, July 11, 2007).

Evidence new to this review indicates that 6.6-hour exposures to 60 ppb O_3 during moderate exertion can result in pulmonary inflammation in healthy adults (based on study mean). As discussed in the ISA, the initiation of inflammation can be considered as evidence that injury has occurred. Inflammation induced by a single O_3 exposure can resolve entirely but, as noted in the ISA (U.S. EPA, 2013a, p. 6-76), "continued acute inflammation can evolve into a chronic inflammatory state," which would be adverse.

Responses measured in controlled human exposure studies indicate that the range of effects elicited in humans exposed to ambient O_3 concentrations include: decreased inspiratory capacity; mild bronchoconstriction; rapid, shallow breathing pattern during exercise; and

symptoms of cough and pain on deep inspiration (U.S. EPA, 2013a, section 6.2.1.1). Young, healthy adults exposed for 6.6 hours to O_3 concentrations ≥ 60 ppb, while engaged in intermittent moderate exertion, develop reversible, transient decrements in lung function. In addition, depending on the exposure concentration and the duration of exposure, young healthy adults have been shown to experience symptoms of breathing discomfort and inflammation if minute ventilation or duration of exposure is increased sufficiently (U.S. EPA, 2013a, section 6.2.1.1). Among healthy subjects there is considerable interindividual variability in the magnitude of the FEV_1 responses, but when data were combined across studies at 60 ppb (U.S. EPA, 2013a, pp. 6-17 to 6-18), 10% of healthy subjects had >10% FEV_1 decrements. Moreover, consistent with the findings of the ISA (U.S. EPA, 2013a, section 6.2.1.1), CASAC concluded that "[a]sthmatic subjects appear to be at least as sensitive, if not more sensitive, than non-asthmatic subjects in manifesting ozone-induced pulmonary function decrements" (Frey, 2014c, p. 4). The combination of lung function decrements and respiratory symptoms, which has been considered adverse in previous reviews, has been demonstrated in healthy adults following prolonged (6.6 hour) exposures, while at intermittent moderate exertion, to 72 ppb. For these types of effects, information from controlled human exposure studies, which provides an indication of the magnitude and thus adversity of effects at different O_3 concentrations, combined with estimates of occurrences in the population from the HREA, provide information about their importance from a policy perspective.

4. Ozone-Related Impacts on Public Health

Setting standards to provide appropriate public health protection requires consideration of the factors that put populations at greater risk from O_3 exposure. In order to estimate the potential for public health impacts, it is important to consider not only the adversity of the health

effects, but also the populations at greater risk and potential behaviors that may reduce exposures.

a. Identification of at-risk populations and lifestages

The currently available evidence expands the understanding of populations that were identified to be at greater risk of O_3-related health effects at the time of the last review (i.e., people who are active outdoors, people with lung disease, children and older adults and people with increased responsiveness to O_3) and supports the identification of additional factors that may lead to increased risk (U.S. EPA, 2006, section 3.6.2; U.S. EPA, 2013a, Chapter 8). Populations and lifestages may be at greater risk for O_3-related health effects due to factors that contribute to their susceptibility and/or vulnerability to O_3. The definitions of susceptibility and vulnerability have been found to vary across studies, but in most instances "susceptibility" refers to biological or intrinsic factors (e.g., lifestage, sex, preexisting disease/conditions) while "vulnerability" refers to non-biological or extrinsic factors (e.g., socioeconomic status [SES]) (U.S. EPA, 2013a, p. 8-1; U.S. EPA, 2010c, 2009d). In some cases, the terms "at-risk" and "sensitive" have been used to encompass these concepts more generally. In the ISA and PA, "at-risk" is the all-encompassing term used to define groups with specific factors that increase their risk of O_3-related health effects.

There are multiple avenues by which groups may experience increased risk for O_3-induced health effects. A population or lifestage[58] may exhibit greater effects than other populations or lifestages exposed to the same concentration or dose, or they may be at greater risk due to increased exposure to an air pollutant (e.g., time spent outdoors). A group with

[58] Lifestages, which in this case includes childhood and older adulthood, are experienced by most people over the course of a lifetime, unlike other factors associated with at-risk populations.

intrinsically increased risk would have some factor(s) that increases risk through a biological mechanism and, in general, would have a steeper concentration-risk relationship, compared to those not in the group. Factors that are often considered intrinsic include pre-existing asthma, genetic background, and lifestage. A group of people could also have extrinsically increased risk, which would be through an external, non-biological factor, such as socioeconomic status (SES) and diet. Some groups are at risk of increased internal dose at a given exposure concentration, for example, because of breathing patterns. This category would include people who work or exercise outdoors. Finally, there are those who might be placed at increased risk for experiencing greater exposures by being exposed to higher O_3 concentrations. This would include, for example, groups of people with greater exposure to ambient O_3 due to less availability or use of home air conditioners such that they are more likely to be in locations with open windows on high O_3 days. Some groups may be at increased risk of O_3-related health effects through a combination of factors. For example, children tend to spend more time outdoors when O_3 levels are high, and at higher levels of activity than adults, which leads to increased exposure and dose, and they also have biological, or intrinsic, risk factors (e.g., their lungs are still developing) (U.S. EPA, 2013a, Chapter 8). An at-risk population or lifestage is more likely to experience adverse health effects related to O_3 exposures and/or, develop more severe effects from exposure than the general population.

i. People with Specific Genetic Variants

There is adequate evidence for populations with certain genotypes being more at-risk than others to the effects of O_3 exposure on health (U.S. EPA, 2013a, section 8.1). Controlled human exposure and epidemiologic studies have reported evidence of O_3-related increases in respiratory symptoms or decreases in lung function with variants including GSTM1, GSTP1,

HMOX1, and NQO1. NQO1 deficient mice were found to be resistant to O_3-induced AHR and inflammation, providing biological plausibility for results of studies in humans. Additionally, studies of rodents have identified a number of other genes that may affect O_3-related health outcomes, including genes related to innate immune signaling and pro- and anti-inflammatory genes, which have not been investigated in human studies.

ii. People with Asthma

Previous O_3 AQCDs identified individuals with asthma as a population at increased risk of O_3-related health effects. Multiple new epidemiologic studies included in the ISA have evaluated the potential for increased risk of O_3-related health effects in people with asthma, including: lung function; symptoms; medication use; AHR; and airway inflammation (also measured as exhaled nitric oxide fraction, or FeNO). A study of lifeguards in Texas reported decreased lung function with short-term O_3 exposure among both individuals with and without asthma; however, the decrease was greater among those with asthma (Thaller et al., 2008). A Mexican study of children ages 6-14 detected an association between short-term O_3 exposure and wheeze, cough, and bronchodilator use among asthmatics but not non-asthmatics, although this may have been the result of a small non-asthmatic population (Escamilla-Nuñez et al., 2008). A study of modification by AHR (an obligate condition among asthmatics) reported greater short-term O_3-associated decreases in lung function in elderly individuals with AHR, especially among those who were obese (Alexeeff et al., 2007). With respect to airway inflammation, in one study, a positive association was reported for airway inflammation among asthmatic children following short-term O_3 exposure, but the observed association was similar in magnitude to that of non-asthmatics (Barraza-Villarreal et al., 2008). Similarly, another study of children in California reported an association between O_3 concentration and FeNO that persisted both among

children with and without asthma as well as those with and without respiratory allergy (Berhane et al., 2011). Finally, Khatri et al. (2009) found no association between short-term O_3 exposure and altered lung function for either asthmatic or non-asthmatic adults, but did note a decrease in lung function among individuals with allergies.

New evidence for difference in effects among asthmatics has been observed in studies that examined the association between O_3 exposure and altered lung function by asthma medication use. A study of children with asthma living in Detroit reported a greater association between short-term O_3 and lung function (i.e., FEV_1) for corticosteroid users compared with noncorticosteroid users (Lewis et al., 2005). Conversely, another study found decreased lung function among noncorticosteroid users compared to users, although in this study, a large proportion of non-users were considered to be persistent asthmatics (Hernández-Cadena et al., 2009). Lung function was not related to short-term O_3 exposure among corticosteroid users and non-users in a study taking place during the winter months in Canada (Liu et al., 2009). Additionally, a study of airway inflammation reported a counterintuitive inverse association with O_3 of similar magnitude for all groups of corticosteroid users and non-users (Qian et al., 2009).

Controlled human exposure studies that have examined the effects of O_3 on adults with asthma and healthy controls are limited. Based on studies reviewed in the 1996 and 2006 O_3 AQCDs, subjects with asthma appeared to be more sensitive to acute effects of O_3 in terms of FEV_1 and inflammatory responses than healthy non-asthmatic subjects. For instance, Horstman et al. (1995) observed that mild-to-moderate asthmatics, on average, experienced double the O_3-induced FEV_1 decrement of healthy subjects (19% versus 10%, respectively, $p = 0.04$). Moreover, a statistically significant positive correlation between FEV_1 responses to O_3 exposure and baseline lung function was observed in individuals with asthma, i.e., responses increased

with severity of disease. Minimal evidence exists suggesting that individuals with asthma have smaller O_3-induced FEV_1 decrements than healthy subjects (3% versus 8%, respectively) (Mudway et al., 2001). However, the asthmatics in that study also tended to be older than the healthy subjects, which could partially explain their lesser response since FEV_1 responses to O_3 exposure diminish with age. Individuals with asthma also had significantly more neutrophils in the BALF (18 hours postexposure) than similarly exposed healthy individuals (Peden et al., 1997; Scannell et al., 1996; Basha et al., 1994). Furthermore, a study examining the effects of O_3 on individuals with atopic asthma and healthy controls reported that greater numbers of neutrophils, higher levels of cytokines and hyaluronan, and greater expression of macrophage cell-surface markers were observed in induced sputum of atopic asthmatics compared with healthy controls (Hernandez et al., 2010). Differences in O_3-induced epithelial cytokine expression were noted in bronchial biopsy samples from asthmatics and healthy controls (Bosson et al., 2003). Cell-surface marker and cytokine expression results, and the presence of hyaluronan, are consistent with O_3 having greater effects on innate and adaptive immunity in these asthmatic individuals. In addition, studies have demonstrated that O_3 exposure leads to increased bronchial reactivity to inhaled allergens in mild allergic asthmatics (Kehrl et al., 1999; Jorres et al., 1996) and to the influx of eosinophils in individuals with pre-existing allergic disease (Vagaggini et al., 2002; Peden et al., 1995). Taken together, these results point to several mechanistic pathways which could account for the enhanced sensitivity to O_3 in subjects with asthma (U.S. EPA, 2013a, section 5.4.2.2).

As noted in the previous review (72 FR 37846, July 11, 2007) asthmatics present a differential response profile for cellular, molecular, and biochemical parameters (U.S. EPA, 2006a, Figure 8–1) that are altered in response to acute O_3 exposure. Ozone-induced increases in

neutrophils, IL–8 and protein were found to be significantly higher in the BAL fluid from asthmatics compared to healthy subjects, suggesting mechanisms for the increased sensitivity of asthmatics (Basha et al., 1994; McBride et al., 1994; Scannell et al., 1996; Hiltermann et al., 1999; Holz et al., 1999; Bosson et al., 2003). Neutrophils, or PMNs, are the white blood cell most associated with inflammation. IL–8 is an inflammatory cytokine with a number of biological effects, primarily on neutrophils. The major role of this cytokine is to attract and activate neutrophils. Protein in the airways is leaked from the circulatory system, and is a marker for increased cellular permeability.

Bronchial constriction following provocation with O_3 and/or allergens presents a two-phase response. The early response is mediated by release of histamine and leukotrienes that leads to contraction of smooth muscle cells in the bronchi, narrowing the lumen and decreasing the airflow. In people with allergic airway disease, including people with rhinitis and asthma, these mediators also cause accumulation of eosinophils in the airways (Bascom et al., 1990; Jorres et al., 1996; Peden et al., 1995 and 1997; Frampton et al., 1997a; Michelson et al., 1999; Hiltermann et al., 1999; Holz et al., 2002; Vagaggini et al., 2002). In asthma, the eosinophil, which increases inflammation and allergic responses, is the cell most frequently associated with exacerbations of the disease. A study by Bosson et al. (2003) evaluated the difference in O_3-induced bronchial epithelial cytokine expression between healthy and asthmatic subjects. After O_3 exposure the epithelial expression of IL–5 and GM-CSF increased significantly in asthmatics, compared to healthy subjects. Asthma is associated with Th2-related airway response (allergic response), and IL–5 is an important Th2-related cytokine. The O_3-induced increase in IL–5, and also in GM-CSF, which affects the growth, activation and survival of eosinophils, may indicate an effect on the Th2-related airway response and on airway eosinophils. The authors reported

that the O_3-induced Th2-related cytokine responses that were found within the asthmatic group may indicate a worsening of their asthmatic airway inflammation and thus suggest a plausible link to epidemiological data indicating O_3-associated increases in bronchial reactivity and hospital admissions.

The accumulation of eosinophils in the airways of asthmatics is followed by production of mucus and a late-phase bronchial constriction and reduced airflow. In a study of 16 intermittent asthmatics, Hiltermann et al. (1999) found that there was a significant inverse correlation between the O_3-induced change in the percentage of eosinophils in induced sputum and the change in PC20, the concentration of methacholine causing a 20% decrease in FEV_1. Characteristic O_3-induced inflammatory airway neutrophilia at one time was considered a leading mechanism of airway hyperresponsiveness. However, Hiltermann et al. (1999) determined that the O_3-induced change in percentage neutrophils in sputum was not significantly related to the change in PC20. These results are consistent with the results of Zhang et al. (1995), which found neutrophilia in a murine model to be only coincidentally associated with airway hyperresponsiveness, *i.e.*, there was no cause and effect relationship (U.S. EPA, 2006a, AX 6–26). Hiltermann et al. (1999) concluded that the results point to the role of eosinophils in O_3-induced airway hyperresponsiveness. Increases in O_3-induced nonspecific airway responsiveness incidence and duration could have important clinical implications for asthmatics.

Toxicological studies provide additional evidence of the biological basis for the greater effects of O_3 among those with asthma or AHR (U.S. EPA, 2013a, section 8.2.2). In animal toxicological studies, an asthmatic phenotype is modeled by allergic sensitization of the respiratory tract. Many of the studies that provide evidence that O_3 exposure is an inducer of AHR and remodeling utilize these types of animal models. For example, a series of experiments

in infant rhesus monkeys have shown these effects, but only in monkeys sensitized to house dust mite allergen. Similarly, adverse changes in pulmonary function were demonstrated in mice exposed to O_3; enhanced inflammatory responses were in rats exposed to O_3, but only in animals sensitized to allergen. In general, it is the combined effects of O_3 and allergic sensitization which result in measurable effects on pulmonary function. In a pulmonary fibrosis model, exposure to O_3 for 5 days increased pulmonary inflammation and fibrosis, along with the frequency of bronchopneumonia in rats. Thus, short-term exposure to O_3 may enhance damage in a previously injured lung (U.S. EPA, 2013a, section 8.2.2).

In the 2006 O_3 AQCD, the potential for individuals with asthma to have greater risk of O_3-related health effects was supported by a number of controlled human exposure studies, evidence from toxicological studies, and a limited number of epidemiologic studies. In section 8.2.2, the ISA reports that in the recent epidemiologic literature some, but not all, studies report greater risk of health effects among individuals with asthma. Studies examining effect measure modification of the relationship between short-term O_3 exposure and altered lung function by corticosteroid use provided limited evidence of O_3-related health effects. However, recent studies of behavioral responses have found that studies do not take into account individual behavioral adaptations to forecasted air pollution levels (such as avoidance and reduced time outdoors), which may underestimate the observed associations in studies that examined the effect of O_3 exposure on respiratory health (Neidell and Kinney, 2010). This could explain some inconsistency observed among recent epidemiologic studies. The evidence from controlled human exposure studies provides support for increased detriments in FEV_1 and greater inflammatory responses to O_3 in individuals with asthma than in healthy individuals without a history of asthma. The collective evidence for increased risk of O_3-related health effects among

individuals with asthma from controlled human exposure studies is supported by recent toxicological studies which provide biological plausibility for heightened risk of asthmatics to respiratory effects due to O_3 exposure. Overall, the ISA finds there is adequate evidence for asthmatics to be an at-risk population.

iii. Children

Children are considered to be at greater risk from O_3 exposure because their respiratory systems undergo lung growth until about 18-20 years of age and are therefore thought to be intrinsically more at risk for O_3-induced damage (U.S. EPA, 2006a). It is generally recognized that children spend more time outdoors than adults, and, therefore, would be expected to have higher exposure to O_3 than adults. Children aged 11 years and older and adults have higher absolute ventilation rates than younger children aged 1-11 years. However, younger children have higher ventilation rates relative to their lung volumes, which tends to increase dose normalized to lung surface area. In all ages, exercise intensity has a substantial effect on ventilation rate, high intensity activity results in nearly double the ventilation rate for moderate activity. For more information on time spent outdoors and ventilation rate differences by age group, see section 4.4.1 in the ISA (U.S. EPA, 2013a).

The 1996 O_3 AQCD reported clinical evidence that children, adolescents, and young adults (<18 years of age) appear, on average, to have nearly equivalent spirometric responses to O_3 exposure, but have greater responses than middle-aged and older adults (U.S. EPA, 1996). Symptomatic responses (e.g., cough, shortness of breath, pain on deep inspiration) to O_3 exposure, however, appear to increase with age until early adulthood and then gradually decrease with increasing age (U.S. EPA, 1996). Complete lung growth and development is not achieved

until 18-20 years of age in women and the early 20s for men; pulmonary function is at its maximum during this time as well.

Recent epidemiologic studies have examined different age groups and their risk to O_3-related respiratory hospital admissions and emergency department visits. Evidence for greater risk in children was reported in several studies. A study in Cyprus of short-term O_3 concentrations and respiratory hospital admissions detected possible effect measure modification by age with a larger association among individuals < 15 years of age compared with those > 15 years of age; the effect was apparent only with a 2-day lag (Middleton et al., 2008). Similarly, a Canadian study of asthma-related emergency department visits reported the strongest O_3-related associations among 5- to 14-year olds compared to the other age groups (ages examined 0-75+) (Villeneuve et al., 2007). Greater O_3-associated risk in asthma-related emergency department visits were also reported among children (<15 years) as compared to adults (15 to 64 years) in a study from Finland (Halonen et al., 2009). A study of New York City hospital admissions demonstrated an increase in the association between O_3 exposure and asthma-related hospital admissions for 6- to 18-year olds compared to those < 6 years old and those > 18 years old (Silverman and Ito, 2010). When examining long-term O_3 exposure and asthma-related hospital admissions among children, associations were determined to be larger among children 1 to 2 years old compared to children 2 to 6 years old (Lin et al., 2008). A few studies reported positive associations among both children and adults and no modification of the effect by age.

The evidence reported in epidemiologic studies is supported by recent toxicological studies which observed O_3-induced health effects in immature animals. Early life exposures of multiple species of laboratory animals, including infant monkeys, resulted in changes in

conducting airways at the cellular, functional, ultra-structural, and morphological levels. The studies conducted on infant monkeys are most relevant for assessing effects in children. Carey et al. (2007) conducted a study of O_3 exposure in infant rhesus macaques, whose respiratory tract closely resemble that of humans. Monkeys were exposed either acutely or in episodes designed to mimic human exposure. All monkeys acutely exposed to O_3 had moderate to marked necrotizing rhinitis, with focal regions of epithelial exfoliation, numerous infiltrating neutrophils, and some eosinophils. The distribution, character, and severity of lesions in episodically exposed infant monkeys were similar to that of acutely exposed animals. Neither exposure protocol for the infant monkeys produced mucous cell metaplasia proximal to the lesions, an adaptation observed in adult monkeys exposed in another study (Harkema et al., 1987). Functional and cellular changes in conducting airways were common manifestations of exposure to O_3 among both the adult and infant monkeys (Plopper et al., 2007). In addition, the lung growth of the distal conducting airways in the infant monkeys was significantly stunted by O_3 and this aberrant development was persistent 6 months postexposure (Fanucchi et al., 2006).

Age may also affect the inflammatory response to O_3 exposure. Toxicological studies reported that the difference in effects among younger lifestage test animals may be due to age-related changes in antioxidants levels and sensitivity to oxidative stress. Further discussion of these studies may be found in section 8.3.1.1 of the ISA (U.S. EPA, 2013a, p. 8-18).

The previous and recent human clinical and toxicological studies reported evidence of increased risk from O_3 exposure for younger ages, which provides coherence and biological plausibility for the findings from epidemiologic studies. Although there was some inconsistency, generally, the epidemiologic studies reported positive associations among both children and adults or just among children. The interpretation of these studies is limited by the lack of

consistency in comparison age groups and outcomes examined. However, overall, the epidemiologic, controlled human exposure, and toxicological studies provide adequate evidence that children are potentially at increased risk of O_3-related health effects.

iv. Older adults

The ISA notes that older adults are at greater risk of health effects associated with O_3 exposure through a variety of intrinsic pathways (U.S. EPA, 2013a, section 8.3.1.2). In addition, older adults may differ in their exposure and internal dose. Older adults were outdoors for a slightly longer proportion of the day than adults aged 18-64 years. For more information on time spent outdoors by age group, see Section 4.4 in the ISA (U.S. EPA, 2013a). The gradual decline in physiological processes that occurs with aging may lead to increased risk of O_3-related health effects (U.S. EPA, 2006a). Respiratory symptom responses to O_3 exposure appears to increase with age until early adulthood and then gradually decrease with increasing age (U.S. EPA, 1996); lung function responses to O_3 exposure also decline from early adulthood (U.S. EPA, 1996). The reductions of these responses with age may put older adults at increased risk for continued O_3 exposure. In addition, older adults, in general, have a higher prevalence of preexisting diseases compared to younger age groups and this may also lead to increased risk of O_3-related health effects (U.S. EPA, 2013a, section 8.3.1.2). With the number of older Americans increasing in upcoming years (estimated to increase from 12.4% of the U.S. population to 19.7% between 2000 to 2030, which is approximately 35 million and 71.5 million individuals, respectively) this group represents a large population potentially at risk of O_3-related health effects (SSDAN CensusScope, 2010a; U.S. Census Bureau, 2010).

The majority of recent studies reported greater effects of short-term O_3 exposure and mortality among older adults, which is consistent with the findings of the 2006 O_3 AQCD. A

study (Medina-Ramón and Schwartz, 2008) conducted in 48 cities across the U.S. reported larger effects among adults ≥65 years old compared to those < 65 years. Further investigation of this study population revealed a trend of O_3-related mortality risk that gets larger with increasing age starting at age 51 (Zanobetti and Schwartz, 2008a). Another study conducted in 7 urban centers in Chile reported similar results, with greater effects in adults ≥65 years old (Cakmak et al., 2007). More recently, a study conducted in the same area reported similar associations between O_3 exposure and mortality in adults aged < 64 years old and 65 to 74 years old, but the risk was increased among the older age group (Cakmak et al., 2011). A study performed in China reported greater effects in populations ≥45 years old (compared to 5 to 44 year olds), with statistically significant effects present only among those ≥65 years old (Kan et al., 2008). An Italian study reported higher risk of all-cause mortality associated with increased O_3 concentrations among individuals ≥85 year old as compared to those 35 to 84 years old (Stafoggia et al., 2010). The Air Pollution and Health: A European and North American Approach (APHENA) project examined the association between O_3 exposure and mortality for those <75 and ≥ 75 years of age. In Canada, the associations for all-cause and cardiovascular mortality were greater among those ≥75 years old. In the U.S., the association for all-cause mortality was slightly greater for those <75 years of age compared to those ≥75 years old in summer-only analyses. No consistent pattern was observed for CVD mortality. In Europe, slightly larger associations for all-cause mortality were observed in those <75 years old in all-year and summer-only analyses. Larger associations were reported among those <75years for CVD mortality in all-year analyses, but the reverse was true for summer-only analyses (Katsouyanni et al., 2009).

With respect to epidemiologic studies of O_3 exposure and hospital admissions, a positive association was reported between short-term O_3 exposure and respiratory hospital admissions for

adults ≥65 years old but not for those adults aged 15 to 64 years (Halonen et al., 2009). In the same study, no association was observed between O_3 concentration and respiratory mortality among those ≥65 years old or those 15 to 64 years old. No modification by age (40 to 64 year olds versus >64 year olds) was observed in a study from Brazil examining O_3 levels and COPD-related emergency department visits.

Although some outcomes reported mixed findings regarding an increase in risk for older adults, recent epidemiologic studies report consistent positive associations between short-term O_3 exposure and mortality in older adults. The evidence from mortality studies is consistent with the results reported in the 2006 O_3 AQCD and is supported by toxicological studies providing biological plausibility for increased risk of effects in older adults. Also, older adults may be experiencing increased exposure compared to younger adults. Overall, the ISA (U.S. EPA, 2013a) concludes adequate evidence is available indicating that older adults are at increased risk of O_3-related health effects.

v. People with diets lower in vitamins C and E

Diet was not examined as a factor potentially affecting risk in previous O_3 AQCDs, but recent studies have examined modification of the association between O_3 and health effects by dietary factors. Because O_3 mediates some of its toxic effects through oxidative stress, the antioxidant status of an individual is an important factor that may contribute to increased risk of O_3-related health effects. Supplementation with vitamins C and E has been investigated in a number of studies as a means of inhibiting O_3-mediated damage.

Two epidemiologic studies have examined effect modification by diet and found evidence that certain dietary components are related to the effect O_3 has on respiratory outcomes. In one recent study, the effects of fruit/vegetable intake and Mediterranean diet were examined.

Increases in these food patterns, which have been noted for their high vitamins C and E and omega-3 fatty acid content, were positively related to lung function in asthmatic children living in Mexico City, and modified by O_3 exposure (Romieu et al., 2009). Another study examined supplementation of the diets of asthmatic children in Mexico with vitamins C and E (Sienra-Monge et al., 2004). Associations were detected between short-term O_3 exposure and nasal airway inflammation among children in the placebo group but not in those receiving the supplementation.

The epidemiologic evidence is supported by controlled human exposure studies, discussed in section 8.4.1 of the ISA (U.S. EPA, 2013a), that have shown that the first line of defense against oxidative stress is antioxidants-rich extracellular lining fluid (ELF) which scavenges free radicals and limit lipid peroxidation. Exposure to O_3 depletes antioxidant levels in nasal ELF probably due to scrubbing of O_3; however, the concentration and the activity of antioxidant enzymes either in ELF or plasma do not appear to be related to O_3 responsiveness. Controlled studies of dietary antioxidant supplementation have demonstrated some protective effects of α-tocopherol (a form of vitamin E) and ascorbate (vitamin C) on spirometric measures of lung function after O_3 exposure but not on the intensity of subjective symptoms and inflammatory responses. Dietary antioxidants have also afforded partial protection to asthmatics by attenuating postexposure bronchial hyperresponsiveness. Toxicological studies discussed in section 8.4.1 of the ISA (U.S. EPA, 2013a) provide evidence of biological plausibility to the epidemiologic and controlled human exposure studies.

Overall, the ISA (U.S. EPA, 2013a) concludes adequate evidence is available indicating that individuals with diets lower in vitamins C and E are at risk for O_3-related health effects. The

evidence from epidemiologic studies is supported by controlled human exposure and toxicological studies.

vi. Outdoor workers

Studies included in the 2006 O_3 AQCD reported that individuals who participate in outdoor activities or work outside to be a population at increased risk based on consistently reported associations between O_3 exposure and respiratory health outcomes in these groups (U.S. EPA, 2006a). Outdoor workers are exposed to ambient O_3 concentrations for a greater period of time than individuals who spend their days indoors. As discussed in section 4.7 of the ISA (U.S. EPA, 2013a) outdoor workers sampled during the work shift had a higher ratio of personal exposure to fixed-site monitor concentrations than health clinic workers who spent most of their time indoors. Additionally, an increase in dose to the lower airways is possible during outdoor exercise due to both increases in the amount of air breathed (i.e., minute ventilation) and a shift from nasal to oronasal breathing. The association between FEV_1 responses to O_3 exposure and minute ventilation is discussed more fully in section 6.2.3.1 of the 2006 O_3 AQCD (U.S. EPA, 2006a).

Previous studies have shown that increased exposure to O_3 due to outdoor work leads to increased risk of O_3-related health effects, specifically decrements in lung function (U.S. EPA, 2006a). The strong evidence from the 2006 O_3 AQCD, which demonstrated increased exposure, dose, and ultimately risk of O_3-related health effects in this population, supports the conclusion that there is adequate evidence to indicate that increased exposure to O_3 through outdoor work increases the risk of O_3-related health effects.

In some cases, it is difficult to determine a factor that results in increased risk of effects. For example, previous assessments have included controlled human exposure studies in which

some healthy individuals demonstrate greater O_3-related health effects compared to other healthy individuals. Interindividual variability has been observed for lung function decrements, symptomatic responses, pulmonary inflammation, AHR, and altered epithelial permeability in healthy adults exposed to O_3, and these results tend to be reproducible within a given individual over a period of several months indicating differences in the intrinsic responsiveness. In many cases the reasons for the variability is not clear. This may be because one or some of the factors described above have not been evaluated in studies, or it may be that additional, unidentified factors influence individual responses to O_3 (U.S. EPA, 2013a, section 8.5).

As discussed in chapter 8 of the ISA (U.S. EPA, 2013a), there is a lack of information regarding the extent to which some factors may increase risk from O_3 exposures. Due to this lack of information, the ISA concluded that for some factors, such as sex, SES, and obesity, there is only "suggestive" evidence of increased risk, or that for a number of factors the evidence is inadequate to draw conclusions about potential increase in risk of effects. Overall, the factors for which the ISA concludes there is adequate evidence of increased risk for experiencing O_3-related effects were related to asthma, lifestage (children and older adults), genetic variability, dietary factors, and working outdoors.

b. Size of at-risk populations

One consideration in the assessment of potential public health impacts is the size of various population groups for which there is adequate evidence of increased risk for health effects associated with O_3-related air pollution exposure (U.S. EPA, 2014c, section 3.1.5.2). The factors for which the ISA judged the evidence to be "adequate" with respect to contributing to increased risk of O_3-related effects among various populations and lifestages included: asthma; childhood and older adulthood; diets lower in vitamins C and E; certain genetic variants; and

working outdoors (U.S. EPA, 2013a, section 8.5). No statistics are available to estimate the size of an at-risk population based on nutritional status or genetic variability.

With regard to asthma, Table 3-7 in the PA (U.S. EPA, 2014c, section 3.1.5.2) summarizes information on the prevalence of current asthma by age in the U.S. adult population in 2010 (Schiller et al. 2012; children - Bloom et al., 2011). Individuals with current asthma constitute a fairly large proportion of the population, including more than 25 million people. Asthma prevalence tends to be higher in children than adults. Within the U.S., approximately 8.2% of adults have reported currently having asthma (Schiller et al., 2012) and 9.5% of children have reported currently having asthma (Bloom et al., 2011).[59]

With regard to lifestages, based on U.S. census data from 2010 (Howden and Meyer, 2011), about 74 million people, or 24% of the U.S. population, are under 18 years of age and more than 40 million people, or about 13% of the U.S. population, are 65 years of age or older. Hence, a large proportion of the U.S. population (i.e., more than a third) is included in age groups that are considered likely to be at increased risk for health effects from ambient O_3 exposure.

With regard to outdoor workers, in 2010, approximately 11.7% of the total number of people (143 million people) employed, or about 16.8 million people, worked outdoors one or

[59] As noted below (II.C.3.a.ii), asthmatics can experience larger O_3-induced respiratory effects than non-asthmatic, healthy adults. The responsiveness of asthmatics to O_3 exposures could depend on factors that have not been well-evaluated such as asthma severity, the effectiveness of asthma control, or the prevalence of medication use.

more days per week (based on worker surveys).[60] Of these, approximately 7.4% of the workforce, or about 7.8 million people, worked outdoors three or more days per week.

The health statistics data illustrate what is known as the "pyramid" of effects. At the top of the pyramid, there are approximately 2.5 million deaths from all causes per year in the U.S. population, with about 250 thousand respiratory-related deaths (CDC-WONDER, 2008). For respiratory health diseases, there are nearly 3.3 million hospital discharges per year (HCUP, 2007), 8.7 million respiratory emergency department visits (HCUP, 2007), 112 million ambulatory care visits (Woodwell and Cherry, 2004), and an estimated 700 million restricted activity days per year due to respiratory conditions (Adams et al., 1999). Combining small risk estimates with relatively large baseline levels of health outcomes can result in quite large public health impacts. Thus, even a small percentage reduction in O_3 health impacts on cardiopulmonary diseases would reflect a large number of avoided cases.

c. Impacts of averting behavior

The activity pattern of individuals is an important determinant of their exposure (U.S. EPA, 2013a, section 4.4.1). Variation in O_3 concentrations among various microenvironments means that the amount of time spent in each location, as well as the level of activity, will influence an individual's exposure to ambient O_3. Activity patterns vary both among and within individuals, resulting in corresponding variations in exposure across a population and over time. Individuals can reduce their exposure to O_3 by altering their behaviors, such as by staying

[60] The O*NET program is the nation's primary source of occupational information. Central to the project is the O*NET database, containing information on hundreds of standardized and occupation-specific descriptors. The database, which is available to the public at no cost, is continually updated by surveying a broad range of workers from each occupation. http://www.onetcenter.org/overview.html. http://www.onetonline.org/find/descriptor/browse/Work_Context/4.C.2/.

indoors, being active outdoors when air quality is better, and by reducing their activity levels or reducing the time being active outdoors on high-O_3 days (U.S. EPA, 2013a, section 4.4.2).

The widely reported Air Quality Index (AQI) conveys advice to the public, and particularly at-risk populations, on reducing short- or prolonged-exposures on days when ambient levels of common, criteria air pollutants (except lead), are elevated (www.airnow.gov). Information communicated by the AQI is based on the evidence and exposure/risk information assessed in the review of the NAAQS; it is updated and revised as necessary during the review of each standard. Proposed changes to the AQI sub-index for O_3, based on evidence and exposure/risk information assessed in this review, are discussed in section III below.

The AQI describes the potential for health effects from O_3 (and other individual pollutants) in six color-coded categories of air-quality, ranging from Good (green), Moderate (yellow), Unhealthy for Sensitive Groups (orange), Unhealthy (red), and Very Unhealthy (purple), and Hazardous (maroon). Levels in the unhealthy ranges (i.e., Unhealthy for Sensitive Groups and above) come with recommendations about reducing exposure. Forecasted and actual AQI values for O_3 are reported to the public during the O_3 season. The AQI advisories explicitly state that children, older adults, people with lung disease, and people who are active outdoors, may be at greater risk from exposure to O_3. People are advised to reduce exposure depending on the predicted O_3 levels and the likelihood of risk. This advice includes being active outdoors when air quality is better, and reducing activity levels or reducing the time being active outdoors on high-O_3 days. Staying indoors to reduce exposure is not recommended until air quality reaches the Very Unhealthy or Hazardous categories.

Evidence of individual averting behaviors in response to AQI advisories has been found in several studies, including activity pattern and epidemiologic studies, especially for the at-risk

populations, such as children, older adults, and people with asthma, who are targeted by the advisories. Such effects are less pronounced in the general population, possibly due to the opportunity cost of behavior modification. Epidemiologic evidence from a study (Neidell and Kinney, 2010) conducted in the 1990's in Los Angeles, CA reports increased asthma hospital admissions among children and older adults when O_3 alert days (1-hour max O_3 concentration >200 ppb) were excluded from the analysis of daily hospital admissions and O_3 concentrations (presumably thereby eliminating averting behavior based on high O_3 forecasts). If averting behavior reduces exposure to ambient O_3, then epidemiologic studies that do not account for averting behavior may produce effect estimates that are biased toward the null due to exposure misclassification (U.S. EPA, 2013, section 4.6.6).

C. Human Exposure and Health Risk Assessments

To put judgments about health effects that are adverse for individuals into a broader public health context, the EPA has developed and applied models to estimate human exposures to O_3 and O_3-associated health risks. Exposure and risk estimates based on such models are presented and assessed in the HREA (U.S. EPA, 2014a). In reviewing the draft HREA, CASAC expressed the view that the document is "well-written, founded based upon comprehensive analyses and adequate for its intended purpose" (Frey, 2014a, p. 1). Analyses in the HREA inform consideration of the O_3 exposures and health risks that could be allowed by the current standard and alternative standards, and consideration of the kind and degree of uncertainties inherent in estimates of O_3 exposures and health risks.

The following sections discuss the air quality adjustment approach used in the HREA for exposure and health risk estimates (II.C.1); the approach taken to estimate exposures, key

exposure results, and important uncertainties (II.C.2); and the approaches taken to estimate O_3 health risks, key risk results, and important uncertainties (II.C.3).

1. Air Quality Adjustment

As discussed above (section I.E), O_3 is formed near the Earth's surface due to chemical interactions involving solar radiation and precursor pollutants including VOCs, NO_X, CH_4 and CO. The response of O_3 to changes in precursor concentrations is nonlinear. In particular, NO_X causes both the formation and destruction of O_3. The net impact of NO_X emissions on O_3 concentrations depends on the local quantities of NO_X, VOC, and sunlight, which interact in a set of complex chemical reactions. In some areas, such as urban centers where NO_X emissions typically are high, NO_X leads to the net destruction of O_3, decreasing O_3 concentrations in the immediate vicinity. This phenomenon is particularly pronounced under conditions that lead to low ambient O_3 concentrations (i.e. during cool, cloudy weather and at night when photochemical activity is limited or nonexistent). However, while NO_X can initially destroy O_3 near emission sources, these same NO_X emissions eventually react to form O_3 downwind of those sources. Photochemical model simulations suggest that reductions in NO_X emissions will slightly increase O_3 concentrations near NO_X sources on days with lower O_3 concentrations, while at the same time decreasing the highest O_3 concentrations in outlying areas. The atmospheric chemistry that influences ambient O_3 concentrations is discussed in more detail in the ISA (U.S. EPA, 2013a, Chapter 3) and the PA (U.S. EPA, 2014c, Chapter 2) (see also Frey, 2014a, p. 10 and 11).

The HREA uses a photochemical model to estimate sensitivities of O_3 to changes in precursor emissions in order to estimate ambient O_3 concentrations that would just meet the

current and alternative standards (U.S. EPA, 2014a, Chapter 4).[61] For the 15 urban study areas evaluated in the HREA,[62] this model-based adjustment approach estimates hourly O_3 concentrations at each monitor location when modeled U.S. anthropogenic precursor emissions (i.e., NO_X, VOC)[63] are reduced. The HREA estimates air quality that just meets the current and alternative standards for the 2006-2008 and 2008-2010 periods.[64]

As discussed in Chapter 4 of the HREA (U.S. EPA, 2014a), this approach to adjusting air quality models the physical and chemical atmospheric processes that influence ambient O_3 concentrations. Compared to the quadratic rollback approach used in previous reviews, it provides more realistic estimates of the spatial and temporal responses of O_3 to reductions in precursor emissions. Because ambient NO_X can contribute both to the formation and destruction of O_3 (U.S. EPA, 2014a, Chapter 4), as discussed above, the response of ambient O_3 concentrations to reductions in NO_X emissions is more variable than indicated by the quadratic rollback approach. This improved approach to adjusting O_3 air quality is consistent with recommendations from the National Research Council of the National Academies (NRC, 2008). In addition, CASAC strongly supported the improved approach, stating that "the quadratic

---

[61] The HREA uses the Community Multi-scale Air Quality (CMAQ) photochemical model instrumented with the higher order direct decoupled method (HDDM) to estimate O_3 concentrations that would occur with the achievement of the current and alternative O_3 standards (U.S. EPA, 2014a, Chapter 4).

[62] The urban study areas assessed are Atlanta, Baltimore, Boston, Chicago, Cleveland, Dallas, Denver, Detroit, Houston, Los Angeles, New York, Philadelphia, Sacramento, St. Louis, and Washington, DC.

[63] Exposure and risk analyses for most urban study areas focus on reducing U.S. anthropogenic NO_X emissions alone. The exceptions are Chicago and Denver. Exposure and risk analyses for Chicago and Denver are based on reductions in emissions of both NO_X and VOC (U.S. EPA, 2014a, section 4.3.3.1; Appendix 4D).

[64] These simulations are illustrative and do not reflect any consideration of specific control programs designed to achieve the reductions in emissions required to meet the specified standards. Further, these simulations do not represent predictions of when, whether, or how areas might meet the specified standards.

rollback approach has been replaced by a scientifically more valid Higher-order Decoupled Direct Method (HDDM)" and that "[t]he replacement of the quadratic rollback procedure by the HDDM procedure is important and supported by the CASAC" (Frey, 2014a, pp.1 and 3).

Consistent with the O_3 chemistry summarized above, in locations and time periods when NO_X is predominantly contributing to O_3 formation (e.g., downwind of important NO_X sources, where the highest O_3 concentrations often occur), model-based adjustment to the current and alternative standards decreases estimated ambient O_3 concentrations compared to recent monitored concentrations (U.S. EPA, 2014a, section 4.3.3.2). In contrast, in locations and time periods when NO_X is predominantly contributing to O_3 titration (e.g., in urban centers with high concentrations of NO_X emissions, where ambient O_3 concentrations are often suppressed and thus relatively low[65]), model-based adjustment increases ambient O_3 concentrations compared to recent monitored concentrations (U.S. EPA, 2014a, section 4.3.3.2; Frey, 2014a, p. 10).

Within urban study areas, the overall impacts of model-based air quality adjustment are to reduce the O_3 concentrations at the upper ends of ambient distributions and to increase the O_3 concentrations at the lower ends of those distributions (U.S. EPA, 2014a, section 4.3.3.2, Figures 4-9 and 4-10).[66] Seasonal means of daily O_3 concentrations generally exhibit only modest changes upon model adjustment, reflecting the seasonal balance between daily decreases in relatively higher concentrations and increases in relatively lower concentrations (U.S. EPA, 2014a, Figures 4-9 and 4-10). The resulting compression in the seasonal distributions of ambient

[65] Titration is also prominent during time periods when photochemistry is limited, and ambient O_3 concentrations are relatively low, such as at night and on cool, cloudy days (U.S. EPA, 2014a, Chapter 4).

[66] It is important to note that sensitivity analyses in the HREA indicate that the increases in low O_3 concentrations are smaller when NO_X and VOC emissions are reduced than when only NO_X emissions are reduced (U.S. EPA, 2014a, Appendix 4-D, section 4.7).

O_3 concentrations is evident in all of the urban study areas evaluated, though the degree of compression varies considerably across areas (U.S. EPA, 2014a, Figures 4-9 and 4-10).

This compression in the distributions of ambient O_3 concentrations has important implications for exposure and risk estimates in urban study areas. Estimates influenced largely by the upper ends of the distribution of ambient concentrations (i.e., exposures of concern and lung function risk estimates, as discussed in sections 3.2.2 and 3.2.3.1 of the PA (U.S. EPA, 2014c)) decrease with adjustment of air quality to the current and alternative standards. In contrast, seasonal risk estimates influenced by the full distribution of ambient O_3 concentrations (i.e., epidemiology-based risk estimates, as discussed in section 3.2.3.2 of the PA) either decrease or increase in response to air quality adjustment, depending on the balance between the daily decreases in high O_3 concentrations and increases in low O_3 concentrations.[67]

In their review of the second draft HREA, CASAC considered this issue, in particular noting that "reductions in nitrogen oxides emissions can lead to less scavenging of ozone and free radicals, resulting in locally higher levels of ozone" (Frey, 2014a, p. 10). CASAC recommended that "the EPA should identify and discuss whether and to what extent health risks in the urban core may be affected by NO_X reductions or other possible strategies" and, in particular, concluded that it would "be of interest to learn if there would be any children or outdoor workers in the more urban areas who would experience significantly higher exposures to ozone as a result of possible changes in the ozone NAAQS" (Frey, 2014a, p. 10). Consistent with this advice, the exposure and risk implications of the spatial and temporal patterns of ambient O_3

[67]In addition, because epidemiology-based risk estimates use "area-wide" average O_3 concentrations, calculated by averaging concentrations across multiple monitors in urban study areas (U.S. EPA, 2014c, section 3.2.3.2), risk estimates on a given day depend on the daily balance between increasing and decreasing O_3 concentrations at the individual monitors that are averaged together to calculate the "area-wide" concentration.

following air quality adjustment in urban study areas are discussed in the final HREA (U.S. EPA, 2014a, Chapter 9) and the final PA (U.S. EPA, 2014c, sections 3.2.2, 3.2.3), and are summarized below within the context of the PA's consideration of exposure estimates (II.D.2.a) and risk estimates (II.D.2.b and II.D.2.c).

2. Exposure Assessment

This section discusses the HREA assessment of human exposures to O_3. Section II.C.2.a provides an overview of the approach used in the HREA to assessing exposures and the approach in the PA to considering exposure estimates, and summarizes key results. Section II.C.2.b summarizes the important uncertainties in exposure estimates.

a. Overview and summary of key results

The exposure assessment presented in the HREA (U.S. EPA, 2014a, Chapter 5) provides estimates of the number and percent of people exposed to various concentrations of ambient O_3, while at specified exertion levels. The HREA estimates exposures in the 15 urban study areas for four study groups, all school-age children (ages 5 to 18), asthmatic school-age children, asthmatic adults (ages 19 to 95), and all older adults (ages 65 to 95), reflecting the evidence indicating that these populations are at increased risk for O_3-attributable effects (U.S. EPA, 2013a, Chapter 8). An important purpose of these exposure estimates is to provide perspective on the extent to which air quality adjusted to just meet the current O_3 NAAQS could be associated with exposures to O_3 concentrations reported to result in respiratory effects.[68] Estimates of such

[68] In addition, the range of modeled personal exposures to ambient O_3 provide an essential input to the portion of the health risk assessment based on exposure-response functions (for lung function decrements) from controlled human exposure studies. The health risk assessment based on exposure-response information is discussed below (II.C.3).

"exposures of concern" provide perspective on the potential public health impacts of O_3-related effects, including effects that cannot currently be evaluated in a quantitative risk assessment.[69]

In the absence of large scale exposure studies that encompass the general population, as well as at-risk populations, modeling is the preferred approach to estimating exposures to O_3 (U.S. EPA, 2014a, Chapter 5). The use of exposure modeling also facilitates the estimation of exposures resulting from ambient O_3 concentrations differing from those present during exposure studies. In the HREA, population exposures to ambient O_3 concentrations are estimated using the current version of the Air Pollutants Exposure (APEX) model. The APEX model simulates the movement of individuals through time and space and estimates their exposures to a given pollutant in indoor, outdoor, and in-vehicle microenvironments (U.S. EPA, 2014a, section 5.1.3). APEX takes into account important factors that contribute to total human exposure to ambient O_3, including the temporal and spatial distributions of people and O_3 concentrations throughout an urban area, the variation of O_3 concentrations within various microenvironments, and the effects of exertion on breathing rate in exposed individuals (U.S. EPA, 2014a, section 5.1.3). To the extent spatial and/or temporal patterns of ambient O_3 concentrations are altered upon model adjustment, as discussed above, exposure estimates reflect population exposures to those altered patterns.

The HREA estimates 8-hour exposures at or above benchmark concentrations of 60, 70, and 80 ppb for individuals engaged in moderate or greater exertion (i.e., to approximate conditions in the controlled human exposure studies on which benchmarks are based).

---

[69] In this review, the term "exposure of concern" is defined as a personal exposure, while at moderate or greater exertion, to 8-hour average ambient O_3 concentrations at and above specific benchmarks. As discussed below, benchmarks represent exposure concentrations at which O_3-induced health effects are known to occur, or can reasonably be anticipated to occur, in some individuals.

Benchmarks reflect exposure concentrations at which O_3-induced respiratory effects are known to occur in some healthy adults engaged in moderate, intermittent exertion, based on evidence from controlled human exposure studies (U.S. EPA, 2013a, section 6.2; U.S. EPA, 2014c, section 3.1.2.1). The amount of weight to place on the estimates of exposures at or above specific benchmark concentrations depends in part on the weight of the scientific evidence concerning health effects associated with O_3 exposures at those benchmark concentrations. It also depends on judgments about the importance, from a public health perspective, of the health effects that are known or can reasonably be inferred to occur as a result of exposures at benchmark concentrations (U.S. EPA, 2014c, sections 3.1.3, 3.1.5).

As discussed in more detail above (II.B.2), the health evidence that supports evaluating exposures of concern at or above benchmark concentrations of 60, 70, and 80 ppb comes from a large body of controlled human exposure studies reporting a variety of respiratory effects in healthy adults. The lowest O_3 exposure concentration for which controlled human exposure studies have reported respiratory effects in healthy adults is 60 ppb (based on changes in group mean responses), with more evidence supporting this benchmark concentration in the current review than in the last review. In healthy adults, 6.6 hour exposures to 60 ppb O_3 have been reported to decrease lung function and to increase airway inflammation. Exposures of healthy adults to 72 ppb O_3 for 6.6 hours have been reported to result in larger average lung function decrements, compared to 60 ppb, as well as in increased respiratory symptoms. Exposures of healthy adults to 80 ppb O_3 for 6.6 hours have been reported to result in larger average lung function decrements than following exposures to 60 or 72 ppb and, depending on the study, to increase airway inflammation, increase respiratory symptoms, increase airways responsiveness, and decrease lung host defense (based on changes in group means) (U.S. EPA, 2014c, section

3.1.2.1). In commenting on the evidence for benchmark concentrations, CASAC stated the following (Frey, 2014c, p. 6):

> The 80 ppb-8hr benchmark level represents an exposure level for which there is substantial clinical evidence demonstrating a range of ozone-related effects including lung inflammation and airway responsiveness in healthy individuals. The 70 ppb-8hr benchmark level reflects the fact that in healthy subjects, decreases in lung function and respiratory symptoms occur at concentrations as low as 72 ppb and that these effects almost certainly occur in some people, including asthmatics and others with low lung function who are less tolerant of such effects, at levels of 70 ppb and below. The 60 ppb-8hr benchmark level represents the lowest exposure level at which ozone-related effects have been observed in clinical studies of healthy individuals. Based on its scientific judgment, the CASAC finds that the 60 ppb-8hr exposure benchmark is relevant for consideration with respect to adverse effects on asthmatics.

In considering estimates of O_3 exposures of concern at or above benchmarks of 60, 70, and 80 ppb, the PA focuses on modeled exposures for school-age children (ages 5-18), including asthmatic school-age children, which are key at-risk populations identified in the ISA (U.S. EPA, 2014c, section 3.1.5). The percentages of children estimated to experience exposures of concern are considerably larger than the percentages estimated for adult populations (i.e., approximately 3-fold larger across urban study areas) (U.S. EPA, 2014a, section 5.3.2 and Figures 5-5 to 5-8). The larger exposure estimates for children are due primarily to the larger percentage of children estimated to spend an extended period of time being physically active outdoors when O_3 concentrations are elevated (U.S. EPA, 2014a, sections 5.3.2 and 5.4.1).

Although exposure estimates differ between children and adults, the patterns of results across the urban study areas and years are similar among all of the populations evaluated (U.S. EPA, 2014a, Figures 5-5 to 5-8). Therefore, while the PA highlights estimates in children, including asthmatic school-age children, it also notes that the patterns of exposures estimated for children represent the patterns estimated for adult asthmatics and older adults.

Table 1 below summarizes key results from the exposure assessment. Table 1 presents estimates of the percentages and numbers of all school-aged children estimated to experience exposures of concern when air quality was adjusted to just meet the current and alternative 8-hour O_3 standards. The percentage of all school-age children in the 15 urban study areas estimated to experience exposures of concern declines when comparing just meeting the current standard to just meeting alternative 8-hour O_3 standards. Substantial variability is evident across years and urban study areas, as indicated by the ranges of averaged estimates and estimates for worst-case years and study areas. As discussed below, the interindividual variability in responsiveness following exposures of concern means that only a subset of individuals who are exposed at and above a given benchmark concentration would actually be expected to experience respiratory effects.

Table 1. Summary of Estimated Exposures of Concern in All School-age Children for the Current and Alternative O_3 Standards in Urban Study Areas

Benchmark Concentration	Standard Level (ppb)	Average % Children Exposed[70]	Average Number of Children Exposed [Average Number of Asthmatic Children][71]	% Children - Worst Year and Worst Area
One or more exposures of concern per season				
≥ 80 ppb	75	0 - 0.3	27,000 [3,000]	1.1
	70	0 - 0.1	3,700 [300]	0.2
	65	0	300 [0]	0
	60	0	100[72] [0]	0
≥ 70 ppb	75	0.6 - 3.3	362,000 [40,000]	8.1
	70	0.1 - 1.2	94,000 [10,000]	3.2
	65	0 - 0.2	14,000 [2,000]	0.5
	60	0	1,400 [200]	0.1
≥ 60 ppb	75	9.5 - 17	2,316,000 [246,000]	25.8
	70	3.3 - 10.2	1,176,000 [126,000]	18.9
	65	0 - 4.2	392,000 [42,000]	9.5
	60	0 - 1.2	70,000 [8,000]	2.2
Two or more exposures of concern per season				
≥ 80 ppb	75	0	600 [100]	0.1
	70	0	0 [0]	0
	65	0	0 [0]	0
	60	0	0 [0]	0
≥ 70 ppb	75	0.1 - 0.6	46,000 [5,000]	2.2
	70	0 - 0.1	5,400 [600]	0.4
	65	0	300 [100]	0
	60	0	0 [0]	0
≥ 60 ppb	75	3.1 - 7.6	865,000 [93,000]	14.4
	70	0.5 - 3.5	320,000 [35,000]	9.2

[70] Estimates for each urban case study area were averaged for the years evaluated in the HREA (2006 to 2010). Ranges reflect the ranges across urban study areas. Estimates smaller than 0.05% were rounded downward to zero (from U.S. EPA, 2014a, Tables 5-11 and 5-12).

[71] Numbers of children exposed in each urban case study area were averaged over the years 2006 to 2010. These averages were then summed across urban study areas. Numbers were rounded to nearest thousand unless otherwise indicated. Estimates smaller than 50 were rounded downward to zero (from U.S. EPA, 2014a, Appendix 5F Table 5F-5). See below for discussion of uncertainties in exposure estimates.

[72] As discussed in section 4.3.3 of the HREA, the model-based air quality adjustment approach used to estimate risks associated with the current and alternative standards was unable to estimate the distribution of ambient O_3 concentrations in New York City upon just meeting an alternative standard with a level of 60 ppb. Therefore, for the 60 ppb standard level the numbers of children and asthmatic children reflect all of the urban study areas except New York.

	65	0 - 0.8	67,000 [7,500]	2.8
	60	0 - 0.2	5,100 [700]	0.3

b. Key uncertainties

In considering exposure estimates within the context of the current and alternative O_3 standards, the PA also notes important uncertainties in these estimates. For example, due to variability in responsiveness, only a subset of individuals who experience exposures at or above a benchmark concentration can be expected to experience health effects.[73] Given the lack of sufficient exposure-response information for most of the health effects that informed benchmark concentrations, estimates of the number of people likely to experience exposures at or above benchmark concentrations generally cannot be translated into quantitative estimates of the number of people likely to experience specific health effects.[74] The PA views health-relevant exposures as a continuum with greater confidence and less uncertainty about the existence of adverse health effects at higher O_3 exposure concentrations, and less confidence and greater uncertainty as one considers lower exposure concentrations. This view draws from the overall body of available health evidence, which indicates that as exposure concentrations increase, the incidence, magnitude, and severity of effects increases.

Though the PA indicates less confidence in the likelihood of adverse health effects as O_3 exposure concentrations decrease, it also notes that the controlled human exposure studies that provided the basis for health benchmark concentrations have not evaluated at-risk populations. Compared to the healthy individuals included in controlled human exposure studies, members of

[73] As noted below (II.C.3.a.ii), in the case of asthmatics, responsiveness to O_3 could depend on factors that have not been well-evaluated, such as asthma severity, the effectiveness of asthma control, or the prevalence of medication use.
[74] The exception to this is lung function decrements, as discussed below (and in U.S. EPA, 2014c, section 3.2.3.1).

at-risk populations (e.g., asthmatics, children) could be more likely to experience adverse effects, could experience larger and/or more serious effects, and/or could experience effects following exposures to lower O_3 concentrations. The CASAC expressed similar views in their advice to the Administrator (Frey, 2014a, pp. 7 and 14). In considering estimated exposures of concern (U.S. EPA, 2014c, section 3.4), the PA notes that concerns about the potential for adverse health effects, including effects in at-risk populations must be balanced against the increasing uncertainty regarding the likelihood of such effects following exposures to lower O_3 concentrations.

Uncertainties associated with the APEX exposure modeling also have the potential to be important (U.S. EPA, 2014a, section 5.5.2, Table 5-6). For example, the HREA concludes that exposures of concern could be underestimated for some individuals who are frequently and routinely active outdoors during the warm season (U.S. EPA, 2014a, section 5.5.2). This could include outdoor workers and children who are frequently active outdoors. The HREA specifically notes that long-term diary profiles (i.e., monthly, annual) do not exist for such populations, limiting the extent to which APEX outputs reflect people who follow similar daily routines resulting in high exposures, over extended periods of time.

In order to evaluate one dimension of the potential implications of this uncertainty for exposure estimates, the HREA reports the results of limited exposure model sensitivity analyses using subsets of activity diaries specifically selected to reflect groups spending a larger proportion of time being active outdoors during the O_3 season. When diaries were selected to mimic activity patterns performed by outdoor workers, the percent of modeled individuals estimated to experience exposures of concern was higher than the other adult populations evaluated. The percentages of outdoor workers estimated to experience exposures of concern

were generally similar to the percentages estimated for children (i.e., using the full database of diary profiles) in the worst-case urban study area and year (i.e., urban study area and year with the largest percent of children estimated to experience exposures of concern) (U.S. EPA, 2014a, section 5.4.3.2, Figure 5-14). In addition, when diaries were restricted to children who did not report any time spent inside a school or performing paid work (i.e., to mimic children spending large portions of their time outdoors during the summer), the number experiencing exposures of concern increased by approximately 30% (U.S. EPA, 2014a, section 5.4.3.1). Though these sensitivity analyses are limited to single urban study areas, and though there is uncertainty associated with diary selection approaches to mimic highly exposed populations, they suggest the possibility that some at-risk groups could experience more frequent exposures of concern than indicated by estimates made using the full database of activity diary profiles.

In further considering activity diaries, the HREA also notes that growing evidence indicates that people can change their behavior in response to high O_3 concentrations, reducing the time spent being active outdoors (U.S. EPA, 2014a, section 5.4.3.3). Commonly termed "averting behaviors," these altered activity patterns could reduce personal exposure concentrations. Therefore, the HREA also performed limited sensitivity analyses to evaluate the potential implications of averting behavior for estimated exposures of concern. These analyses suggest that averting behavior could reduce the percentages of children estimated to experience exposures of concern at or above the 60 or 70 ppb benchmark concentrations by approximately 10 to 30%, with larger reductions possible for the 80 ppb benchmark (U.S. EPA, 2014a, Figure 5-15). As discussed above for other sensitivity analyses, these analyses are limited to a single urban case study area and are subject to uncertainties associated with assumptions about the prevalence and duration of averting behaviors. However, the results suggest that exposures of

concern could be overestimated, particularly in children (Neidell, 2009; U.S. EPA, 2013, Figures 4-7 and 4-8), if the possibility for averting behavior is not incorporated into estimates.

3. Quantitative Health Risk Assessments

For some health endpoints, there is sufficient scientific evidence and information available to support the development of quantitative estimates of O_3-related health risks. In the last review of the O_3 NAAQS, the quantitative health risk assessment estimated O_3-related lung function decrements, respiratory symptoms, respiratory-related hospital admissions, and nonaccidental and cardiorespiratory-related mortality (U.S. EPA, 2007). In those analyses, both controlled human exposure and epidemiologic studies were used for the quantitative assessment of O_3-related human health risks.

In the current review, for short-term O_3 concentrations, the HREA estimates lung function decrements; respiratory symptoms in asthmatics; hospital admissions and emergency department visits for respiratory causes; and all-cause mortality (U.S. EPA, 2014a). For long-term O_3 concentrations, the HREA estimates respiratory mortality (U.S. EPA, 2014a).[75] Estimates of O_3-induced lung function decrements are based on exposure modeling, combined with exposure-response relationships from controlled human exposure studies (U.S. EPA, 2014a, Chapter 6). Estimates of O_3-associated respiratory symptoms, hospital admissions and emergency department visits, and mortality are based on concentration-response relationships from epidemiologic studies (U.S. EPA, 2014a, Chapter 7). As with the exposure assessment discussed above, O_3-associated health risks are estimated for recent air quality and for ambient concentrations adjusted to just meet the current and alternative O_3 standards, based on 2006-2010

[75] Estimates of O_3-associated respiratory mortality are based on the study by Jerrett et al. (2009). This study used seasonal averages of 1-hour daily maximum O_3 concentrations to estimate long-term concentrations.

air quality and adjusted precursor emissions. The following sections discuss the lung function risk assessment (II.C.3.a) and the epidemiology-based morbidity and mortality risk assessments (II.C.3.b) from the HREA, including important sources of uncertainty in these estimates.

a. Lung function risk assessment

Section II.C.3.a.i provides an overview of the approach used in the HREA to assessing lung function risks, an overview of the approach in the PA to considering lung function risk estimates, and a summary of key results. Section II.C.3.a.ii presents a summary of key uncertainties in lung function risk estimates.

i. Overview and summary of key results

In the current review, the HREA estimates risks of lung function decrements in school-aged children (ages 5 to 18), asthmatic school-aged children, and the general adult population for the 15 urban study areas. The results presented in the HREA are based on an updated dose-threshold model that estimates FEV_1 responses for individuals following short-term exposures to O_3 (McDonnell et al., 2012), reflecting methodological improvements since the last review (II.B.2.a.i, above; U.S. EPA, 2014a, section 6.2.4). The impact of the dose threshold is that O_3-induced FEV_1 decrements result primarily from exposures on days with average ambient O_3 concentrations above about 40 ppb (U.S. EPA, 2014a, section 6.3.1, Figure 6-9).[76]

The HREA estimates risks of moderate to large lung function decrements, defined as FEV_1 decrements $\geq$ 10%, 15%, or 20%. In evaluating these lung function risk estimates within the context of considering the current and alternative O_3 standards, the PA focuses on the percent

[76] Analysis of this issue in the HREA is based on risk estimates in Los Angeles for 2006 unadjusted air quality. The HREA shows that more than 90% of daily instances of FEV_1 decrements $\geq$ 10% occur when 8-hr average ambient concentrations are above 40 ppb for this modeled scenario. The HREA notes that the distribution of responses will be different for different study areas, years, and air quality scenarios (U.S. EPA, 2014c, Chapter 6).

of children estimated to experience one or more and two or more decrements ≥ 10, 15, and 20%, noting that the percentage of asthmatic children estimated to experience such decrements is virtually indistinguishable from the percentage estimated for all children.[77] Compared to children, a smaller percentage of adults were estimated to experience O_3-induced FEV_1 decrements (U.S. EPA, 2014a, section 6.3.1, Table 6-4). As for exposures of concern (see above), the patterns of results across urban study areas and over the years evaluated are similar in children and adults. Therefore, while the PA highlights estimates in children, it notes that these results are also representative of the patterns estimated for adult populations.

Table 2 below summarizes key results from the lung function risk assessment. Table 2 presents estimates of the percentages of school-aged children estimated to experience O_3-induced FEV_1 decrements ≥ 10, 15, or 20% when air quality was adjusted to just meet the current and alternative 8-hour O_3 standards. Table 2 also presents the numbers of children, including children with asthma, estimated to experience such decrements. As shown in these tables, the percentage of school-age children in the 15 urban study areas estimated to experience O_3-induced FEV_1 decrements declines when comparing just meeting the current standard to just meeting alternative 8-hour O_3 standards. Substantial variability is evident across years and urban study areas, as indicated by the ranges of averaged estimates and estimates for worst-case years and locations.

[77] Though see below for discussion of uncertainty in lung function responses of children and asthmatics.

Table 2. Summary of Estimated O_3-Induced Lung Function Decrements for the Current and Potential Alternative O_3 Standards in Urban Case Study Areas

Lung Function Decrement	Alternative Standard Level	Average % Children[78]	Number of Children (5 to 18 years) [Number of Asthmatic Children][79]	% Children Worst Year and Area
One or more decrements per season				
≥ 10%	75	14-19	3,007,000 [312,000]	22
	70	11-17	2,527,000 [261,000]	20
	65	3-15	1,896,000 [191,000]	18
	60	5-11	1,404,000 [139,000][80]	13
≥ 15%	75	3-5	766,000 [80,000]	7
	70	2-4	562,000 [58,000]	5
	65	0-3	356,000 [36,000]	4
	60	1-2	225,000 [22,000]	3
≥ 20%	75	1-2	285,000 [30,000]	2.8
	70	1-2	189,000 [20,000]	2.1
	65	0-1	106,000 [11,000]	1.4
	60	0-1	57,000 [6,000]	0.9
Two or more decrements per season				
≥ 10%	75	7.5-12	1,730,000 [179,000]	14
	70	5.5-11	1,414,000 [145,000]	13
	65	1.3-8.8	1,023,000 [102,000]	11
	60	2.1-6.4	741,000 [73,000]	7.3
≥ 15%	75	1.7-2.9	391,000 [40,000]	3.8
	70	0.9-2.4	276,000 [28,000]	3.1
	65	0.1-1.8	168,000 [17,000]	2.3
	60	0.2-1.0	101,000 [10,000]	1.4
≥ 20%	75	0.5-1.1	128,000 [13,000]	1.5
	70	0.3-0.8	81,000 [8,000]	1.1
	65	0-0.5	43,000 [4,000]	0.8
	60	0-0.2	21,000 [2,000]	0.4

[78]Estimates in each urban case study area were averaged for the years evaluated in the HREA (2006 to 2010). Ranges reflect the ranges across urban study areas.

[79]Numbers of children estimated to experience decrements in each study urban case study area were averaged over 2006 to 2010. These averages were then summed across urban study areas. Numbers are rounded to nearest thousand unless otherwise indicated.

[80]As discussed in section 4.3.3 of the HREA, the model-based air quality adjustment approach used to estimate risks associated with the current and alternative standards was unable to estimate the distribution of ambient O_3 concentrations in New York City upon just meeting an alternative standard with a level of 60 ppb. Therefore, for the 60 ppb standard level the numbers of children and asthmatic children reflect all of the urban study areas except New York.

ii. Key uncertainties

As for exposures of concern discussed above, the PA also considers important uncertainties in estimates of lung function risk. In addition to the uncertainties noted for exposure estimates, the HREA identifies several key uncertainties associated with estimates of O_3-induced lung function decrements. An uncertainty with particular potential to impact consideration of risk estimates stems from the lack of exposure-response information in children. In the near absence of controlled human exposure data for children, risk estimates are based on the assumption that children exhibit the same lung function response following O_3 exposures as healthy 18 year olds (i.e., the youngest age for which controlled human exposure data is available) (U.S. EPA, 2014a, section 6.5.3). This assumption is justified in part by the findings of McDonnell et al. (1985), who reported that children (8-11 years old) experienced FEV_1 responses similar to those observed in adults (18-35 years old). In addition, as discussed in the ISA (U.S. EPA, 2013a, section 6.2.1), summer camp studies of school-aged children reported O_3-induced lung function decrements similar in magnitude to those observed in controlled human exposure studies using adults. In extending the risk model to children, the HREA fixes the age term in the model at its highest value, the value for age 18. This approach could result in either over- or underestimates of O_3-induced lung function decrements in children, depending on how children compare to the adults used in controlled human exposure studies (U.S. EPA, 2014a, section 6.5.3).

A related source of uncertainty is that the risk assessment estimates O_3-induced decrements in asthmatics using the exposure-response relationship developed from data collected from healthy individuals. Although the evidence has been mixed (U.S. EPA, 2013a, section 6.2.1.1), several studies have reported larger O_3-induced lung function decrements in asthmatics than in non-asthmatics (Kreit et al., 1989; Horstman et al., 1995; Jorres et al., 1996; Alexis et al.,

2000). On this issue, CASAC noted that "[a]sthmatic subjects appear to be at least as sensitive, if not more sensitive, than non-asthmatic subjects in manifesting ozone-induced pulmonary function decrements" (Frey, 2014c, p. 4). To the extent asthmatics experience larger O_3-induced lung function decrements than the healthy adults used to develop exposure-response relationships, the HREA could underestimate the impacts of O_3 exposures on lung function in asthmatics, including asthmatic children. The implications of this uncertainty for risk estimates remain unknown at this time (U.S. EPA, 2014a, section 6.5.4), and could depend on a variety of factors that have not been well-evaluated, including the severity of asthma and the prevalence of medication use. However, the available evidence shows responses to O_3 increase with severity of asthma (Horstman et al., 1995) and corticosteroid usage does not prevent O_3 effects on lung function decrements or respiratory symptoms in people with asthma (Vagaggini et al., 2001, 2007).

b. Mortality and morbidity risk assessments

As discussed above (II.B.2), epidemiologic studies provide evidence for the most serious O_3-associated public health outcomes (e.g., mortality, hospital admissions, emergency department visits). Section II.C.3.b.i below provides an overview of the approach used in the HREA to assessing mortality and morbidity risks based on information from epidemiologic studies, discusses the approach in the PA to considering epidemiology-based risk estimates, and presents a summary of key results. Section II.C.3.b.ii summarizes key uncertainties in epidemiology-base risk estimates.

i. Overview and summary of key results

Risk estimates based on epidemiologic studies can provide perspective on the most serious O_3-associated public health outcomes (e.g., mortality, hospital admissions, emergency

department visits) in populations that often include at-risk groups. The HREA estimates O_3-associated risks in 12 urban study areas[81] using concentration-response relationships drawn from epidemiologic studies. These concentration-response relationships are based on "area-wide" average O_3 concentrations.[82] The HREA estimates risks for the years 2007 and 2009 in order to provide estimates of risk for a year with generally higher O_3 concentrations (2007) and a year with generally lower O_3 concentrations (2009) (U.S. EPA, 2014a, section 7.1.1).

As in the last review of the O_3 NAAQS (U.S. EPA, 2007, pp. 2-48 to 2-54), the PA recognizes that ambient O_3 concentrations, and therefore O_3-associated health risks, result from precursor emissions from various types of sources. Based on the air quality modeling discussed in chapter 2 of the PA (U.S. EPA, 2014c), approximately 30 to 60% of average daytime O_3 during the warm season (i.e., daily maximum 8-hour concentrations averaged from April to October) is attributable to precursor emissions from U.S. anthropogenic sources (U.S. EPA, 2014c, section 2.4.4). The remainder is attributable to precursor emissions from international anthropogenic sources and natural sources. Because the HREA characterizes health risks from all O_3, regardless of source, risk estimates reflect emissions from U.S. anthropogenic, international anthropogenic, and natural sources.

---

[81] The 12 urban areas evaluated are Atlanta, Baltimore, Boston, Cleveland, Denver, Detroit, Houston, Los Angeles, New York, Philadelphia, Sacramento, and St. Louis.

[82] In the epidemiologic studies that provide the health basis for HREA risk assessments, concentration-response relationships are based on daytime O_3 concentrations, averaged across multiple monitors within study areas. These daily averages are used as surrogates for the spatial and temporal patterns of exposures in study populations. Consistent with this approach, the HREA epidemiologic-based risk estimates also utilize daytime O_3 concentrations, averaged across monitors, as surrogates for population exposures. In this notice, we refer to these averaged concentrations as "area-wide" O_3 concentrations. Area-wide concentrations are discussed in more detail in section 3.1.4 of the PA (U.S. EPA, 2014c).

Compared to the weight given to HREA estimates of exposures of concern and lung function risks, and the weight given to the evidence (U.S. EPA, 2014c, section 4.4.1), the PA places relatively less weight on epidemiologic-based risk estimates. In doing so, the PA notes that the overall conclusions from the HREA likewise reflect less confidence in estimates of epidemiologic-based risks than in estimates of exposures and lung function risks. The determination to attach less weight to the epidemiologic-based estimates reflects the uncertainties associated with mortality and morbidity risk estimates, including the heterogeneity in effect estimates between epidemiologic study areas, the potential for epidemiologic-based exposure measurement error, and uncertainty in the interpretation of the shape of concentration-response functions at lower O_3 concentrations (discussed below). The PA also notes the HREA conclusion that lower confidence should be placed in the results of the assessment of respiratory mortality risks associated with long-term O_3 exposures, primarily because that analysis is based on only one study (even though that study is well-designed) and because of the uncertainty in that study about the existence and level of a potential threshold in the concentration-response function (U.S. EPA, 2014a, section 9.6).

In considering the epidemiology-based risk estimates, the PA focuses on mortality risks associated with short-term O_3 concentrations. In doing so, in addition to noting uncertainty in estimates of respiratory mortality associated with long-term O_3, the PA notes that the patterns of estimated respiratory morbidity risks across urban study areas, over years, and for different standards are similar to the patterns of total mortality risk.

The PA considers estimates of total risk (i.e., based on the full distributions of ambient O_3 concentrations) and estimates of risk associated with O_3 concentrations in the upper portions of ambient distributions. A focus on estimates of total risks would place greater weight on the

possibility that concentration-response relationships are linear over the entire distribution of ambient O_3 concentrations, and thus on the potential for morbidity and mortality to be affected by changes in relatively low O_3 concentrations. A focus on risks associated with O_3 concentrations in the upper portions of the ambient distribution would place greater weight on the uncertainty associated with the shapes of concentration-response curves for O_3 concentrations in the lower portions of the distribution. Given that both types of risk estimates could reasonably inform a decision on standard level, depending on the weight placed on uncertainties in the occurrence and the estimation of O_3-attributable effects at relatively low O_3 concentrations, the PA considers both types of estimates. Key results for O_3-associated mortality risk are summarized in Table 3 below. Table 3 presents estimates of the number of O_3-associated deaths in urban study areas, for air quality adjusted to just meet the current and alternative standards.

Table 3. Estimates of O_3-Associated Deaths Attributable to the Full Distribution of 8-Hour Area-Wide O_3 Concentrations and to Concentrations at or above 20, 40, or 60 ppb O_3 (Deaths Summed Across Urban Case Study Areas)[83]

Number of O_3-Associated Deaths Summed Across Urban Case Study Areas				
Standard Level	Total O_3	20+ ppb	40+ ppb	60+ ppb
2007				
75 ppb	7,500	7,500	5,400	500
70 ppb	7,200	7,200	4,900	240
65 ppb	6,500	6,500	2,800	90
60 ppb[84]	6,400	6,400	2,300	10
2009				
75 ppb	7,000	7,000	4,700	270
70 ppb	6,900	6,900	4,300	80
65 ppb	6,400	6,400	2,600	40
60 ppb	6,300	6,300	2,100	10

ii. Key Uncertainties

Compared to estimates of O_3 exposures of concern and estimates of O_3-induced lung function decrements (discussed above), the HREA conclusions reflect lower confidence in epidemiologic-based risk estimates (U.S. EPA, 2014a, section 9.6). In particular, the HREA highlights the heterogeneity in effect estimates between locations, the potential for exposure measurement errors, and uncertainty in the interpretation of the shape of concentration-response

[83] Table 3 is based on the information in Figures 7-2 and 7-3 in the HREA (U.S. EPA, 2014a). Estimates of the numbers of O_3-associated deaths are based on concentration-response relationships for total mortality associated with short-term O_3 from the study by Smith et al. (2009). Estimates of the numbers O_3-associated deaths are rounded to the nearest hundred, unless otherwise indicated.

[84] As discussed in section 4.3.3 of the HREA, the model-based air quality adjustment approach used to estimate risks associated with the current and alternative standards was unable to estimate the distribution of ambient O_3 concentrations in New York City upon just meeting an alternative standard with a level of 60 ppb. Therefore, the total number of deaths indicated for the 60 ppb standard level reflect the 60 ppb estimates for all urban study areas except New York City. For New York City, the estimated number of O_3-associated deaths for the 60 ppb standard level was assumed to be equal to the number for the 65 ppb level.

functions at lower O_3 concentrations (U.S. EPA, 2014a, section 9.6). The HREA also concludes that lower confidence should be placed in the results of the assessment of respiratory mortality risks associated with long-term O_3, primarily because that analysis is based on only one study, though that study is well-designed, and because of the uncertainty in that study about the existence and identification of a potential threshold in the concentration-response function (U.S. EPA, 2014a, section 9.6).[85],[86] This section further discusses some of the key uncertainties in epidemiologic-based risk estimates, as summarized in the PA (U.S. EPA, 2014c, section 3.2.3.2), with a focus on uncertainties that can have particularly important implications for the Administrator's consideration of epidemiology-based risk estimates.

The PA notes that reducing NO_X emissions generally reduces O_3-associated mortality and morbidity risk estimates in locations and time periods with relatively high ambient O_3 concentrations and increases risk estimates in locations and time periods with relatively low concentrations (II.C.1, above). When evaluating uncertainties in epidemiologic risk estimates, it is important to consider (1) the extent to which the O_3 response to reductions in NO_X emissions appropriately represents the trends observed in ambient O_3 following actual reductions in NO_X emissions; (2) the extent to which estimated changes in risks in urban study areas are representative of the changes that would be experienced broadly across the U.S. population; and (3) the extent to which the O_3 response to reductions in precursor emissions could differ with

[85] The CASAC also concluded that "[i]n light of the potential nonlinearity of the C-R function for long-term exposure reflecting a threshold of the mortality response, the estimated number of premature deaths avoidable for long-term exposure reductions for several levels need to be viewed with caution" (Frey, 2014a, p. 3).

[86] There is also uncertainty about the extent to which mortality estimates based on the long-term metric used in the study by Jerrett et al. (2009) (i.e., seasonal average of 1-hour daily maximum concentrations) reflects associations with long-term average O_3 versus repeated occurrences of elevated short-term concentrations.

emissions reduction strategies that are different from those used in HREA to generate risk estimates.

To evaluate the first issue, the HREA conducted a national analysis evaluating trends in monitored ambient O_3 concentrations during a time period when the U.S. experienced large-scale reductions in NO_X emissions (i.e., 2001 to 2010). Analyses of trends in monitored O_3 indicate that over such a time period, the upper end of the distribution of monitored O_3 concentrations (i.e., indicated by the 95th percentile) generally decreased in urban and non-urban locations across the U.S. (U.S. EPA, 2014a, Figure 8-29). During this same time period, median O_3 concentrations decreased in suburban and rural locations, and in some urban locations. However, median concentrations increased in some large urban centers (U.S. EPA, 2014a, Figure 8-28). As discussed in the REA, and above (II.C.1), these increases in median concentrations likely reflect the increases in relatively low O_3 concentrations that can occur near important sources of NO_X upon reductions in NO_X emissions (U.S. EPA, 2014a, section 8.2.3.1). These patterns of monitored O_3 during a period when the U.S. experienced large reductions in NO_X emissions are qualitatively consistent with the modeled responses of O_3 to reductions in NO_X emissions.

To evaluate the second issue, the HREA conducted national air quality modeling analyses. These analyses estimated the proportion of the U.S. population living in locations where seasonal averages of daily O_3 concentrations are estimated to decrease in response to reductions in NO_X emissions, and the proportion living in locations where such seasonal averages are estimated to increase. Given the close relationship between changes in seasonal averages of daily O_3 concentrations and changes in seasonal mortality and morbidity risk estimates, this analysis informs consideration of the extent to which the risk results in urban study areas represent the U.S. population as a whole. This representativeness analysis indicates

that the majority of the U.S. population lives in locations where reducing NO_X emissions would be expected to result in decreases in warm season averages of daily maximum 8-hour ambient O_3 concentrations. Because the HREA urban study areas tend to underrepresent the populations living in such areas (e.g., suburban, smaller urban, and rural areas), risk estimates for the urban study areas are likely to understate the average reductions in O_3-associated mortality and morbidity risks that would be experienced across the U.S. population as a whole upon reducing NO_X emissions (U.S. EPA, 2014a, section 8.2.3.2).

To evaluate the third issue, the HREA assessed the O_3 air quality response to reducing both NO_X and VOC emissions (i.e., in addition to assessing reductions in NO_X emissions alone) for a subset of seven urban study areas. As discussed in the PA (U.S. EPA, 2014c, section 3.2.1), in most of the urban study areas the inclusion of VOC emissions reductions did not alter the NO_X emissions reductions required to meet the current or alternative standards.[87] However, the addition of VOC reductions generally resulted in larger decreases in mid-range O_3 concentrations (25th to 75th percentiles) (U.S. EPA, 2014a, Appendix 4D, section 4.7).[88] In addition, in all seven of the urban study areas evaluated, the increases in low O_3 concentrations were smaller for the NO_X/VOC scenarios than the NO_X alone scenarios (U.S. EPA, 2014a, Appendix 4D, section 4.7). This was most apparent for Denver, Houston, Los Angeles, New York, and Philadelphia. Given the impacts on total risk estimates of increases in low O_3 concentrations, these results

[87] The exceptions are Chicago and Denver, for which the HREA risk estimates are based on reductions in both NO_X and VOC (U.S. EPA, 2014a, section 4.3.3.1). Emissions of NO_X and VOC were reduced by equal percentages, a scenario not likely to reflect the optimal combination for reducing risks.

[88] This was the case for all of the urban study areas evaluated, with the exception of New York (U.S. EPA, 2014a, Appendix 4-D, section 4.7).

suggest that in some locations optimized emissions reduction strategies could result in larger reductions in O_3-associated mortality and morbidity than indicated by HREA estimates.

Section 7.4 of the HREA also highlights some additional uncertainties associated with epidemiologic-based risk estimates (U.S. EPA, 2014a). This section of the HREA identifies and discusses sources of uncertainty and presents a qualitative evaluation of key parameters that can introduce uncertainty into risk estimates (U.S. EPA, 2014a, Table 7-4). For several of these parameters, the HREA also presents quantitative sensitivity analyses (U.S. EPA, 2014a, sections 7.4.2 and 7.5.3). Of the uncertainties discussed in Chapter 7 of the HREA, those related to the application of concentration-response functions from epidemiologic studies can have particularly important implications for consideration of epidemiology-based risk estimates, as discussed below.

An important uncertainty is the shape of concentration-response functions at low ambient O_3 concentrations (U.S. EPA, 2014a, Table 7-4).[89] Consistent with the ISA conclusion that there is no discernible population threshold in O_3-associated health effects, the HREA estimates epidemiology-based mortality and morbidity risks for entire distributions of ambient O_3 concentrations, based on the assumption that concentration-response relationships remain linear over those distributions. In addition, in recognition of the ISA conclusion that certainty in the shape of O_3 concentration-response functions decreases at low ambient concentrations, the HREA also estimates total mortality associated with various ambient O_3 concentrations. The PA considers both types of risk estimates, recognizing greater public health concern for adverse O_3-attributable effects at higher ambient O_3 concentrations (which drive higher exposure

[89] A related uncertainty is the existence, or not, of a threshold. The HREA addresses this issue for long-term O_3 by evaluating risks in models that include potential thresholds (II.D.2.c).

concentrations, section 3.2.2 of the PA (U.S. EPA, 2014c)), as compared to lower concentrations.

A related uncertainty is that associated with the public health importance of the increases in relatively low O_3 concentrations following air quality adjustment. This uncertainty relates to the assumption that the concentration response function for O_3 is linear, such that that total risk estimates are equally influenced by decreasing high concentrations and increasing low concentrations, when the increases and decreases are of equal magnitude. Even on days with increases in relatively low area-wide average concentrations, resulting in increases in estimated risks, some portions of the urban study areas could experience decreases in high O_3 concentrations. To the extent adverse O_3-attributable effects are more strongly supported for higher ambient concentrations (which are consistently reduced upon air quality adjustment), the impacts on risk estimates of increasing low O_3 concentrations reflect an important source of uncertainty.

The HREA also notes important uncertainties associated with using a concentration-response relationship developed for a particular population in a particular location to estimate health risks in different populations and locations (U.S. EPA, 2014a, Table 7-4). As discussed above, concentration-response relationships derived from epidemiologic studies reflect the spatial and temporal patterns of population exposures during the study. The HREA applies concentration-response relationships from epidemiologic studies to adjusted air quality in study areas that are different from, and often larger in spatial extent than, the areas used to generate the relationships. This approach ensures the inclusion of the actual nonattainment monitors that often determine the magnitude of emissions reductions for the air quality adjustments throughout the urban study areas. This approach also allows the HREA to estimate patterns of health risks more

broadly across a larger area, including a broader range of air quality concentrations and a larger population. The HREA notes that it is not possible to quantify the impacts of this uncertainty on risk estimates in most urban case study locations, though the HREA notes that mortality effect estimates for different portions of the New York City core based statistical area (CBSA) vary by a factor of almost 10 (U.S. EPA, 2014a, section 7.5.3).

An additional, related uncertainty is that associated with applying concentration-response functions from epidemiologic studies to adjusted air quality. Concentration-response functions from the O_3 epidemiologic studies used in the HREA are based on associations between day to day variation in "area-wide" O_3 concentrations (i.e., averaged across multiple monitors) and variation in health effects. Epidemiologic studies use these area-wide O_3 concentrations, which reflect the particular spatial and temporal patterns of ambient O_3 present in study locations, as surrogates for the pattern of O_3 exposures experienced by study populations. To the extent adjusting O_3 concentrations to just meet the current standard results in important alterations in the spatial and/or temporal patterns of ambient O_3, there is uncertainty in the appropriateness of applying concentration-response functions from epidemiologic studies (which necessarily reflect a different air quality distribution than the modelled distribution) to estimate health risks associated with adjusted O_3 air quality. In particular, this uncertainty could be important to the extent that (1) factors associated with space modify the effects of O_3 on health or (2) spatial mobility is a key driver of individual-level exposures. Although the impact of this uncertainty on risk estimates cannot be quantified (U.S. EPA, 2014a, Table 7-4), it has the potential to become more important as model adjustment results in larger changes in spatial and temporal patterns of ambient O_3 concentrations across urban study areas.

The use of a national concentration-response function to estimate respiratory mortality associated with long-term O_3 is a source of uncertainty. Risk estimates generated in sensitivity analyses using region-specific effect estimates differ substantially from the core estimates based on a single national-level effect estimate (U.S. EPA, 2014a; Table 7-14). Furthermore, the risk estimates generated using the regional effect estimates display considerable variability across urban study areas (U.S. EPA, 2014a; Table 7-14), reflecting the substantial variability in the underlying effect estimates (see Jerrett et al., 2009, Table 4). While the results of the HREA sensitivity analyses evaluating this uncertainty point to the potential for regional heterogeneity in the long-term risk estimates, the relatively large confidence intervals associated with regional effect estimates resulted in the HREA conclusion that staff does not have confidence in the regionally based risk estimates themselves.

Finally, the HREA does not quantify any reductions in risk that could be associated with reductions in the ambient concentrations of pollutants other than O_3, resulting from control of NO_X. For example, as discussed in chapter 2 of the PA (U.S. EPA, 2014c), NO_X emissions contribute to ambient NO_2, and NO_X and VOCs can contribute to secondary formation of $PM_{2.5}$ constituents, including ammonium sulfate (NH_4SO_4), ammonium nitrate (NH_4NO_3), and organic carbon (OC). Therefore, at some times and in some locations, control strategies that would reduce NO_X emissions (i.e., to meet an O_3 standard) could reduce ambient concentrations of NO_2 and $PM_{2.5}$, resulting in health benefits beyond those directly associated with reducing ambient O_3 concentrations. In issuing its advice, CASAC likewise noted the potential reductions in criteria pollutants other than ozone as a result of NOx reductions, and the resulting potential public health benefits (Frey, 2014a, pp. 10 and 11).

D. Conclusions on the Adequacy of the Current Primary Standard

The initial issue to be addressed in the current review of the primary O_3 standard is whether, in view of the advances in scientific knowledge and additional information, the existing standard should be revised. In evaluating whether it is appropriate to retain or revise the current standard, the Administrator's considerations build upon those in the 2008 review, including consideration of the broader body of scientific evidence and exposure and health risk information now available, as summarized above (II.A to II.C).

In developing conclusions on the adequacy of the current primary O_3 standard, the Administrator takes into account both evidence-based and quantitative exposure- and risk-based considerations. Evidence-based considerations include the assessment of evidence from controlled human exposure, animal toxicological, and epidemiologic studies for a variety of health endpoints. The Administrator focuses on health endpoints for which the evidence is strong enough to support a "causal" or a "likely to be causal" relationship, based on the ISA's integrative synthesis of the entire body of evidence. The Administrator's consideration of quantitative exposure and risk information draws from the results of the exposure and risk assessments presented in the HREA.

The Administrator's consideration of the evidence and exposure/risk information is informed by the considerations and conclusions presented in the PA (U.S. EPA, 2014c). The purpose of the PA is to help "bridge the gap" between the scientific and technical information assessed in the ISA and HREA, and the policy decisions that are required of the Administrator (U.S. EPA, 2014c, Chapter 1). The PA's evidence-based and exposure-/risk-based considerations and conclusions are summarized below in sections II.D.1 to II.D.3. CASAC advice to the Administrator and public commenter views are summarized in section II.D.4. Section II.D.5

presents the Administrator's proposed conclusions concerning the adequacy of the public health protection provided by the current standard, and her proposed decision to revise that standard.

1. Summary of Evidence-Based Considerations in the PA

In considering the available scientific evidence, the PA evaluates the O_3 concentrations in health effects studies (U.S. EPA, 2014c, section 3.1.4). Specifically, the PA characterizes the extent to which effects have been reported for the O_3 exposure concentrations evaluated in controlled human exposure studies and over the distributions of ambient O_3 concentrations in locations where epidemiologic studies have been conducted. These considerations, as they relate to the adequacy of the current standard, are presented in detail in section 3.1.4 of the PA (U.S. EPA, 2014c) and are summarized briefly below for controlled human exposure and epidemiologic panel studies (II.D.1.a), epidemiologic studies of short-term O_3 exposures (II.D.1.b), and epidemiologic studies of long-term O_3 exposures (II.D.1.c). Section II.D.1.d summarizes the PA conclusions based on consideration of the scientific evidence.

a. Concentrations in controlled human exposure and panel studies

The evidence from controlled human exposure studies and panel studies is assessed in section 6.2 of the ISA (U.S. EPA, 2013a) and is summarized in section 3.1.2 of the PA (U.S. EPA, 2014c). As discussed above (II.B), controlled human exposure studies have generally been conducted with young, healthy adults, and have evaluated exposure durations less than 8 hours. Panel studies have evaluated a wider range of study populations, including children, and have

generally evaluated associations with O_3 concentrations averaged over several hours (U.S. EPA, 2013a, section 6.2.1.2).[90]

As summarized above (II.B), a large number of controlled human exposure studies have reported lung function decrements, respiratory symptoms, airway inflammation, AHR, and/or impaired lung host defense in young, healthy adults engaged in moderate, intermittent exertion, following 6.6-hour O_3 exposures. These studies have consistently reported such effects following exposures to O_3 concentrations of 80 ppb or greater. In addition to lung function decrements, available studies have also evaluated respiratory symptoms or airway inflammation following exposures to O_3 concentrations below 75 ppb. Table 3-1 in the PA highlights the group mean results of individual controlled human exposure studies that have evaluated exposures of healthy adults to O_3 concentrations below 75 ppb (U.S. EPA, 2014c). The studies included in Table 3-1 of the PA indicate a combination of lung function decrements and respiratory symptoms following 6.6 hour exposures to O_3 concentrations as low as 72 ppb, and lung function decrements and airway inflammation following 6.6 hour exposures to O_3 concentrations as low as 60 ppb (based on group means).

The PA also notes consistent results in some panel studies of O_3-associated lung function decrements. In particular, the PA notes that epidemiologic panel studies in children and adults consistently indicate O_3-associated lung function decrements when on-site monitored

[90] The PA focuses on panel studies that used on-site monitoring, and that are highlighted in the ISA for the extent to which monitored ambient O_3 concentrations reflect exposure concentrations in their study populations (U.S. EPA, 2013a, section 6.2.1.2).

concentrations were below 75 ppb, although the evidence becomes less consistent at lower O_3 concentrations (U.S. EPA, 2014c, section 3.1.4.1).[91]

Thus, controlled human exposure studies and panel studies have reported respiratory effects in adults and children following exposures to O_3 concentrations below 75 ppb (albeit over shorter averaging periods than the 8 hour averaging time of the current O_3 standard). The PA notes that such impairments in respiratory function have the potential to be adverse, based on ATS guidelines for adversity and based on advice from CASAC (Frey, 2014c, pp. 5 and 6) (U.S. EPA, 2014c, section 3.1.3). In addition, the PA notes that if they become serious enough, these respiratory effects could lead to the types of clearly adverse effects commonly reported in O_3 epidemiologic studies (e.g., respiratory emergency department visits, hospital admissions). Therefore, the PA concludes that the respiratory effects experienced following exposures to O_3 concentrations lower than 75 ppb could be adverse in some individuals, particularly if experienced by members of at-risk populations (e.g., people with asthma, children).[92]

b. Concentrations in epidemiologic studies – short-term

The PA also considers distributions of ambient O_3 concentrations in locations where epidemiologic studies have evaluated O_3-associated hospital admissions, emergency department visits, and/or mortality (U.S. EPA, 2014c, section 3.1.4.2). When considering epidemiologic studies within the context of the current standard, the PA emphasizes those studies conducted in the U.S. and Canada. Such studies reflect air quality and exposure patterns that are likely more

[91] As indicated in the PA (U.S. EPA, 2014c, Table 3-2), key O_3 panel studies evaluated averaging periods ranging from 10 minutes to 12 hours.

[92] These effects were reported in healthy individuals. Consistent with CASAC advice (Samet, 2011; Frey, 2014a, p. 14; Frey, 2014c, p. 7), it is a reasonable inference that the effects would be greater in magnitude and potential severity for at-risk groups. See *National Environmental Development Ass'n Clean Air Project v.* EPA, 686 F. 3d 803, 811 (D.C. Cir. (2012) (making this point).

typical of the U.S. population than the air quality and exposure patterns reflected in studies conducted outside the U.S. and Canada (U.S. EPA, 2014c, section 1.3.1.2).[93] The PA also emphasizes studies reporting associations with effects judged in the ISA to be robust to confounding by other factors, including co-occurring air pollutants. In addition to these factors, the PA considers the statistical precision of study results, the extent to which studies report associations in at-risk populations, and the extent to which the biological plausibility of associations at various ambient O_3 concentrations is supported by controlled human exposure and/or animal toxicological studies. These considerations help inform the range of ambient O_3 concentrations over which the evidence indicates the most confidence in O_3-associated health effects, and the range of concentrations over which confidence in such associations is appreciably lower.

This section summarizes the PA conclusions regarding the extent to which health effect associations have been reported for ambient O_3 concentrations likely to have met the current O_3 standard. Section II.D.1.b.i summarizes PA analyses and conclusions based on analyses evaluating the extent to which epidemiologic studies have reported health effect associations in locations that would likely have met the current O_3 standard. Section II.D.1.b.ii summarizes PA conclusions based on analyses evaluating the O_3 air quality in locations where epidemiologic studies have characterized confidence intervals around cut point analyses or concentration-response functions. Section II.D.1.b.iii summarizes the important uncertainties in these analyses.

i. Associations in locations likely meeting current standard

[93] Nonetheless, the PA recognizes the importance of all studies, including international studies, in the ISA's assessment of the weight of the evidence that informs causality determinations.

The PA considers the extent to which U.S. and Canadian epidemiologic studies have reported associations with mortality or morbidity in locations that would likely have met the current O_3 standard during the study period (U.S. EPA, 2014c, section 3.14.2). Addressing this issue can provide important insights into the extent to which O_3-health effect associations are present for distributions of ambient O_3 concentrations that would be allowed by the current standard. To the extent associations are reported in study areas that would have met the current standard, those associations indicate that the current standard could allow the types of clearly adverse O_3-associated effects reported in epidemiologic studies (e.g., mortality, hospital admissions, emergency department visits).[94] In considering these analyses, the PA also notes that the lack of such associations in locations meeting the current standard indicates increased uncertainty in the extent to which O_3-associated health effects would persist upon reducing O_3 precursor emissions in order to meet that standard.

The PA identifies U.S. and Canadian studies of respiratory hospital admissions, respiratory emergency department visits, and mortality (total, respiratory, cardiovascular) from the ISA (U.S. EPA, 2013a, Tables 6-28, 6-42, and 6-53, and section 6.2.8; U.S. EPA, 2014c, Appendix 3D). Analysis of study area air quality indicates that the large majority of epidemiologic study areas evaluated would have violated the current standard during study periods (U.S. EPA, 2014c, Appendix 3D). However, the PA notes that a single-city study conducted in Seattle, a location that would have met the current standard over the entire study period, reported positive and statistically significant associations with respiratory emergency department visits in children and adults (Mar and Koenig, 2009). The PA also notes four

[94] See *ATA III*, 283 F.3d at 370 (EPA justified in revising NAAQS when health effect associations are observed in epidemiologic studies at levels allowed by the NAAQS); *State of Mississippi v. EPA*, 744 F. 3d at 1345 (same).

Canadian multicity studies that reported positive and statistically significant associations with respiratory morbidity or mortality, and for which the majority of study cities would have met the current standard over the entire study periods (Cakmak et al., 2006; Dales et al., 2006; Katsouyanni et al., 2009; Stieb et al., 2009).[95]

The PA concludes that the single-city study by Mar and Koenig (2009) indicates the presence of associations with mortality and morbidity for an ambient distribution of O_3 that would have met the current standard (U.S. EPA, 2014c, section 3.1.4.2). The PA notes that interpretation of the air quality concentrations in the multicity study locations evaluated in this review is complicated by uncertainties in the extent to which multicity effect estimates can be attributed to ambient O_3 in the majority of locations, which would have met the current standard, versus O_3 in the smaller number of locations that would have violated the standard. While acknowledging this uncertainty in interpreting air quality in multicity studies, the PA notes that multicity effect estimates in the four studies cited above are largely influenced by locations meeting the current standard (i.e., given that most study areas would have met this standard). Therefore, the PA concludes that Canadian multicity studies, in addition to the single-city study in Seattle, suggest confidence in the presence of associations with mortality and morbidity for ambient distributions of O_3 that would have met the current standard (U.S. EPA, 2014c, section 3.1.4.2).

ii. Air quality associated with cut point analyses and concentration-response functions

[95] In addition, a study by Vedal et al. (2003) was included in the 2006 AQCD (U.S. EPA, 2006a). This study reported positive and statistically significant associations with mortality in Vancouver during a time period when the study area would have met the current standard (U.S. EPA, 2007). This study was not assessed in the ISA in the current review (U.S. EPA, 2013a).

The PA also considers the extent to which additional epidemiologic studies of mortality or morbidity, specifically those conducted in locations that would have violated the current standard, can inform consideration of adequacy of the current standard (U.S. EPA, 2014c, section 3.1.4.2). In doing so, the PA notes that health effect associations reported in epidemiologic studies are influenced by the full distributions of ambient O_3 concentrations, including concentrations below the level of the current standard. The PA focuses on studies that have explicitly characterized O_3 health effect associations, including confidence in those associations, for various portions of distributions of ambient O_3 concentrations.

The U.S. multicity study by Bell et al. (2006) reported health effect associations for air quality subsets restricted to ambient O_3 concentrations below one or more predetermined cut points. In these analyses, effect estimates were based only on the subsets of days contributing to averaged O_3 concentrations below cut points ranging from 5 to 60 ppb (Bell et al., 2006, Figure 2).[96] The PA notes that such "cut point" analyses can provide information on the magnitude and statistical precision of effect estimates for defined distributions of ambient concentrations, which may in some cases include distributions that would meet the current standard (U.S. EPA, 2014c, section 3.1.4.2). The cut points below which confidence intervals become notably wider depend in large part on data density and, therefore, cut point analyses provide insight into the ambient concentrations below which the available air quality information becomes too sparse to support conclusions about the nature of concentration-response relationships with a high degree of confidence (U.S. EPA, 2014c, section 3.1.4.2).

[96] In the published study, 2-day rolling averages of 24-hour average O_3 concentrations were calculated in each study location (based on averaging across monitors in study locations with multiple monitors).

The PA considers the extent to which the cut-point analyses reported by Bell et al. (2006) indicate health effect associations for distributions of ambient O_3 concentrations that would likely have met the current standard. The PA particularly focuses on the lowest cut-point for which the association between O_3 and mortality was reported to be statistically significant (i.e., 30 ppb, based on visual inspection of Figure 2 in the published study). Based on the O_3 air quality concentrations that met the criteria for inclusion in the 30 ppb cut point analysis, 95% of study areas had 3-year averages of annual 4th highest daily maximum 8-hour O_3 concentration at or below 75 ppb over the entire study period (U.S. EPA, 2014c, section 3.1.4.2, Table 3-6). Though there are important uncertainties in this analysis, as discussed below, the PA concludes that these results suggest that the large majority of air quality distributions that provided the basis for the positive and statistically significant association with mortality at the 30 ppb cut point would likely have met the current O_3 standard.

The PA also analyzes air quality for studies that have reported confidence intervals around concentration-response functions over distributions of ambient O_3 concentrations (U.S. EPA, 2014c, section 3.1.4.2). Confidence intervals around concentration-response functions can provide insights into the range of ambient concentrations over which the study indicates the most confidence in the reported health effect associations (i.e., where confidence intervals are narrowest), and into the range of ambient concentrations below which the study indicates that uncertainty in the nature of such associations becomes notably greater (i.e., where confidence intervals become markedly wider). As with cut point analyses, the concentrations below which confidence intervals become markedly wider are intrinsically related to data density, and do not necessarily indicate the absence of an association.

The PA focuses on two U.S. single-city studies that have reported confidence intervals around concentration-response functions (Silverman and Ito, 2010; Strickland et al., 2010). Based on the published analyses, the PA identifies the ranges of ambient O_3 concentrations over which these studies indicate the highest degree of confidence in the reported linear concentration-response functions (U.S. EPA, 2014c, section 3.1.4.2). For the lower ends of these ranges, air quality analyses in the PA indicate that over 99% of days had maximum 8-hour O_3 concentrations (i.e., from highest monitors in study locations) at or below 75 ppb. For comparison, the annual 4th highest daily maximum 8-hour O_3 concentration generally corresponds to the 98th or 99th percentile of the seasonal distribution, depending on the length of the O_3 season.

The PA concludes that these analyses of air quality data from the study locations evaluated by Silverman and Ito (2010) and Strickland et al. (2010) indicate a relatively high degree of confidence in reported statistical associations with respiratory health outcomes on days when virtually all monitored 8-hour O_3 concentrations were 75 ppb or below (U.S. EPA, 2014c, section 3.1.4.2). Though these analyses do not identify true design values, the presence of O_3-associated respiratory effects on such days provides insight into the types of health effects that could occur in locations with maximum ambient O_3 concentrations at or below the level of the current standard.

iii. Important Uncertainties

In considering the above evidence within the context of developing overall conclusions on the current and potential alternative standards, the PA also takes into account important uncertainties in these analyses of air quality in locations of epidemiologic study areas. These uncertainties are summarized in this section. The PA's consideration of the evidence, including

the associated uncertainties, in reaching conclusions on the current and potential alternative standards is summarized in sections II.D.3 (current standard) and II.E.4.b (potential alternative standards) below.

The PA notes that while multicity studies generally have greater statistical power and geographic coverage than single-city studies, there is often greater uncertainty in conclusions about the extent to which multicity effect estimates reflect associations with air quality meeting the current standard (U.S. EPA, 2014c, section 1.3.1.2.1). This is particularly the case for the multicity studies evaluated in this review with some study locations meeting the current standard and others violating that standard. Specifically for the four Canadian multicity studies discussed above, the PA notes that interpretation of air quality information is complicated by uncertainties in the extent to which multicity effect estimates can be attributed to ambient O_3 in the majority of locations, which would have met the current standard, versus O_3 in the smaller number of locations that would have violated the standard.

The PA also notes important uncertainties in multicity studies that evaluate the potential for thresholds to exist, as was done in the study by Bell et al. (2006). Specifically, the ISA highlights the regional heterogeneity in O_3 health effect associations as a factor that could obscure the presence of thresholds, should they exist, in multicity studies (U.S. EPA, 2013a, sections 2.5.4.4 and 2.5.4.5). The ISA notes that community characteristics (e.g., activity patterns, housing type, age distribution, prevalence of air conditioning) could be important contributors to reported regional heterogeneity (U.S. EPA, 2013a, section 2.5.4.5). Given this heterogeneity, the ISA concludes that "a national or combined analysis may not be appropriate to identify whether a threshold exists in the O_3-mortality [concentration-response] relationship" (U.S. EPA, 2013a, p. 2-33). This represents an important source of uncertainty when

characterizing confidence in reported concentration-response relationships over distributions of ambient O_3 concentrations, based on multicity studies. The PA notes that this uncertainty becomes increasingly important when interpreting concentration-response relationships at lower ambient O_3 concentrations, particularly those concentrations corresponding to portions of distributions where data density decreases notably (U.S. EPA, 2014c, section 3.1.4.2).

Another important uncertainty, related specifically to the PA analysis of cut points by Bell et al. (2006), is that EPA staff was unable to obtain the air quality data used to generate the cut-point analyses in the published study (U.S. EPA, 2014c, section 3.1.4.2). Therefore, the analyses in the PA identified 2-day averages of 24-hour O_3 concentrations in study locations using the air quality data available in AQS, combined with the published description of study area definitions. An important uncertainty in this approach is the extent to which the PA appropriately recreated the cut-point analyses in the published study (U.S. EPA, 2014c, section 3.1.4.2).

An uncertainty that applies to epidemiologic studies in general is the extent to which reported health effects are caused by exposures to O_3 itself, as opposed to other factors such as co-occurring pollutants or pollutant mixtures. The PA notes that this uncertainty becomes an increasingly important consideration as health effect associations are evaluated at lower ambient O_3 concentrations. In particular, there is increasing uncertainty as to whether the observed associations remain plausibly related to exposures to ambient O_3, rather than to the broader mix of air pollutants present in the ambient air. In considering the potential importance of this uncertainty at the relatively low ambient O_3 concentrations that are the focus of the PA analyses, the PA notes that Silverman and Ito (2010) and Strickland (2010) reported O_3 health effect

associations in co-pollutant models,[97] providing support for associations with O_3 itself (U.S. EPA, 2014c, section 3.1.4.2). The PA also concludes that air quality analyses indicate coherence with the results of experimental studies (i.e., in which the study design dictates that exposures to O_3 itself are responsible for reported effects), and are consistent with the occurrence of O_3-attributable respiratory hospital admissions and emergency department visits, even when virtually all monitored concentrations were below the level of the current standard (U.S. EPA, 2014c, section 3.1.4.2, Tables 3-4, 3-5).

c. Concentrations in epidemiologic studies – long-term

The PA also considers the extent to which epidemiologic studies employing longer-term ambient O_3 concentration metrics inform our understanding of the air quality conditions associated with O_3-attributable health effects, and specifically inform consideration of the extent to which such effects could occur under air quality conditions meeting the current standard (U.S. EPA, 2014c, section 3.1.4.3). Unlike for the studies of short-term O_3 discussed above, the available U.S. and Canadian epidemiologic studies evaluating long-term ambient O_3 concentration metrics have not been conducted in locations likely to have met the current 8-hour O_3 standard during the study period, and have not reported concentration-response functions that indicate confidence in health effect associations at O_3 concentrations meeting the current standard (U.S. EPA, 2014c, section 3.1.4.3). Therefore, although these studies contribute to understanding of health effects associated with long-term or repeated exposures to ambient O_3, consideration of study area air quality does not inform consideration of the extent to which those health effects may be occurring in locations that meet the current standard.

[97] In addition, Bell et al. (2006) reported that, based on a previous study (Bell et al., 2004), associations with mortality were robust to the inclusion of PM_{10} in the model.

d. PA conclusions based on consideration of the evidence

As discussed above (II.D.1.a to II.D.1.c), in considering the available scientific evidence, including associated uncertainties, as it relates to the degree of public health protection provided by the current primary O_3 standard, the PA evaluates the extent to which health effects have been reported for the O_3 exposure concentrations evaluated in controlled human exposure studies and over the distributions of ambient O_3 concentrations in locations where epidemiologic studies have been conducted. The PA concludes that (1) the evidence from controlled human exposure studies provides strong support for the occurrence of adverse respiratory effects following exposures to O_3 concentrations below the level of the current standard and that (2) epidemiologic studies provide support for the occurrence of adverse respiratory effects and mortality under air quality conditions that would likely meet the current standard. In further considering the public health protection provided by the current standard, the PA next considers the results of exposure and health risk assessments.

2. Summary of Exposure- and Risk-Based Considerations in the PA

In order to further inform judgments about the potential public health implications of the current O_3 NAAQS, the PA considers the exposure and risk assessments presented in the HREA (U.S. EPA, 2014c, section 3.2). Overviews of these exposure and risk assessments, including summaries of key results and uncertainties, are provided in section II.C above. This section summarizes key observations from the PA related to the adequacy of the current O_3 NAAQS, based on consideration of the HREA exposure assessment (II.D.2.a), lung function risk assessment (II.D.2.b), and mortality/morbidity risk assessments (II.D.2.c).

a. Exposure assessment – key observations

As discussed above (II.C.2), the exposure assessment provides estimates of the number and percent of people who would experience exposures of concern at or above benchmark concentrations of 60, 70, and 80 ppb. Benchmarks reflect exposure concentrations at which O_3-induced respiratory effects are known to occur in some healthy adults engaged in moderate, intermittent exertion, based on evidence from controlled human exposure studies (U.S. EPA, 2014c, section 3.1.2.1; U.S. EPA, 2013a, section 6.2).

The PA focuses on exposure estimates in children. Compared to recent (i.e., unadjusted) air quality, the PA notes that adjusting air quality to just meet the current O_3 NAAQS consistently reduces the estimated occurrence of exposures of concern in children (U.S. EPA, 2014a, Appendix 5F). When averaged over the years evaluated in the HREA, reductions of up to about 70% were estimated. These reductions in estimated exposures of concern, relative to unadjusted air quality, reflect the consistent reductions in the highest ambient O_3 concentrations upon model adjustment to just meet the current standard (U.S. EPA, 2014c, section 3.2.1; U.S. EPA, 2014a, Chapter 4). Such reductions in estimated exposures of concern are evident throughout urban study areas, including in urban cores and in surrounding areas (U.S. EPA, 2014a, Appendix 9A).

Based on Figures 3-7 to 3-10 in the PA (U.S. EPA, 2014c), and the associated details described in the HREA (U.S. EPA, 2014a, Chapter 5), the PA further highlights key observations with regard to exposures of concern in children that are estimated to be allowed by the current standard. These key observations are summarized below for exposures of concern $\geq$ 60, 70, and 80 ppb.

For exposures of concern at or above 60 ppb, the PA highlights the following key observations for air quality adjusted to just meet the current standard:

(1) On average over the years 2006 to 2010, the current standard is estimated to allow approximately 10 to 18% of children in urban study areas to experience one or more exposures of concern at or above 60 ppb. Summing across urban study areas, these percentages correspond to almost 2.5 million children experiencing approximately 4 million exposures of concern at or above 60 ppb during a single O_3 season. Of these children, almost 250,000 are asthmatics.[98]

(2) On average over the years 2006 to 2010, the current standard is estimated to allow approximately 3 to 8% of children in urban study areas to experience two or more exposures of concern to O_3 concentrations at or above 60 ppb. Summing across the urban study areas, these percentages correspond to almost 900,000 children (including almost 90,000 asthmatic children) estimated to experience at least two O_3 exposure concentrations at or above 60 ppb during a single O_3 season.

(3) In the worst-case years (i.e., those with the largest exposure estimates), the current standard is estimated to allow approximately 10 to 25% of children to experience one or more exposures of concern at or above 60 ppb, and approximately 4 to 14% to experience two or more exposures of concern at or above 60 ppb.

For exposures of concern at or above 70 ppb, the PA highlights the following key observations for air quality adjusted to just meet the current standard:

(1) On average over the years 2006 to 2010, the current standard is estimated to allow up to approximately 3% of children in urban study areas to experience one or more exposures of concern at or above 70 ppb. Summing across urban study areas, almost 400,000

[98] As discussed above (II.C.2.b), due to variability in responsiveness, only a subset of individuals who experience exposures at or above a benchmark concentration can be expected to experience adverse health effects.

children (including almost 40,000 asthmatic children) are estimated to experience O_3 exposure concentrations at or above 70 ppb during a single O_3 season.[99]

(2) On average over the years 2006 to 2010, the current standard is estimated to allow less than 1% of children in urban study areas to experience two or more exposures of concern to O_3 concentrations at or above 70 ppb.

(3) In the worst-case years, the current standard is estimated to allow approximately 1 to 8% of children to experience one or more exposures of concern at or above 70 ppb, and up to approximately 2% to experience two or more exposures of concern, at or above 70 ppb.

For exposures of concern at or above 80 ppb, the PA highlights the observation that the current standard is estimated to allow about 1% or fewer children in urban study areas to experience exposures of concern at or above 80 ppb, even in years with the highest exposure estimates.

b. Lung function risk assessment – key observations

As discussed above (II.C.3.a), the HREA estimates risks of moderate to large lung function decrements (i.e., FEV_1 decrements $\geq$ 10%, 15%, or 20%) in school-aged children (ages 5 to 18), asthmatic school-aged children, and the general adult population for 15 urban study areas. As for exposures of concern, the PA focuses on lung function risk estimates in children (including children with asthma).

Compared to risks associated with recent air quality, risk estimates for air quality just meeting the current standard are consistently smaller across urban study areas (U.S. EPA, 2014a, Appendix 6B). When averaged over the years evaluated in the HREA, risk reductions of up to about 40% were estimated compared to recent air quality. These reductions reflect the consistent

[99] As discussed above (II.C.2.b), due to variability in responsiveness, only a subset of individuals who experience exposures at or above a benchmark concentration can be expected to experience adverse health effects.

decreases in relatively high ambient O_3 concentrations upon adjustment to just meet the current standard (U.S. EPA, 2014a, Chapter 4). Such reductions in estimated lung function risks are evident throughout urban study areas, including in urban cores and in surrounding areas (U.S. EPA, 2014, Appendix 9A).

Based on Figures 3-11 to 3-14 in the PA (U.S. EPA, 2014c), and the associated details described in the HREA (U.S. EPA, 2014a, chapter 6), the PA highlights key observations with regard to lung function risks estimated in children for air quality adjusted to just meet the current standard. These key observations are presented below for FEV_1 decrements $\geq$ 10, 15, and 20%.

With regard to decrements $\geq$ 10%, the PA highlights the following key observations for air quality adjusted to just meet the current standard:

(1) On average over the years 2006 to 2010, the current standard is estimated to allow approximately 14 to 19% of children in urban study areas to experience one or more lung function decrements $\geq$ 10%. Summing across urban study areas, this corresponds to approximately 3 million children experiencing 15 million O_3-induced lung function decrements $\geq$ 10% during a single O_3 season. Of these children, about 300,000 are asthmatics.

(2) On average over the years 2006 to 2010, the current standard is estimated to allow approximately 7 to 12% of children in urban study areas to experience two or more O_3-induced lung function decrements $\geq$ 10%. Summing across the urban study areas, this corresponds to almost 2 million children (including almost 200,000 asthmatic children) estimated to experience two or more O_3-induced lung function decrements greater than 10% during a single O_3 season.

(3) In the worst-case years, the current standard is estimated to allow approximately 17 to 23% of children in urban study areas to experience one or more lung function decrements ≥ 10%, and approximately 10 to 14% to experience two or more O_3-induced lung function decrements ≥ 10%.

With regard to decrements ≥ 15%, the PA highlights the following key observations for air quality adjusted to just meet the current standard:

(1) On average over the years 2006 to 2010, the current standard is estimated to allow approximately 3 to 5% of children in urban study areas to experience one or more lung function decrements ≥ 15%. Summing across urban study areas, this corresponds to approximately 800,000 children (including approximately 80,000 asthmatic children) estimated to experience at least one O_3-induced lung function decrement ≥ 15% during a single O_3 season.

(2) On average over the years 2006 to 2010, the current standard is estimated to allow approximately 2 to 3% of children in urban study areas to experience two or more O_3-induced lung function decrements ≥ 15%.

(3) In the worst-case years, the current standard is estimated to allow approximately 4 to 6% of children in urban study areas to experience one or more lung function decrements ≥ 15%, and approximately 2 to 4% to experience two or more O_3-induced lung function decrements ≥ 15%.

With regard to decrements ≥ 20%, the PA highlights the following key observations for air quality adjusted to just meet the current standard:

(1) On average over the years 2006 to 2010, the current standard is estimated to allow approximately 1 to 2% of children in urban study areas to experience one or more lung

function decrements ≥ 20%. Summing across urban study areas, this corresponds to approximately 300,000 children (including approximately 30,000 asthmatic children) estimated to experience at least one O_3-induced lung function decrement ≥ 20% during a single O_3 season.

(2) On average over the years 2006 to 2010, the current standard is estimated to allow less than 1% of children in urban study areas to experience two or more O_3-induced lung function decrements ≥ 20%.

(3) In the worst-case years, the current standard is estimated to allow approximately 2 to 3% of children to experience one or more lung function decrements ≥ 20%, and less than 2% to experience two or more O_3-induced lung function decrements ≥ 20%.

c. Mortality and morbidity risk assessments – key observations

As discussed above (II.C.3.b), risk estimates based on epidemiologic studies can provide perspective on the most serious O_3-associated public health outcomes (e.g., mortality, hospital admissions, emergency department visits) in populations that often include at-risk groups. The HREA estimates such O_3-associated risks in 12 urban study areas[100] using concentration-response relationships drawn from epidemiologic studies. These concentration-response relationships are based on "area-wide" average O_3 concentrations.[101] The HREA estimates risks

[100] The 12 urban areas evaluated are Atlanta, Baltimore, Boston, Cleveland, Denver, Detroit, Houston, Los Angeles, New York, Philadelphia, Sacramento, and St. Louis. Morbidity endpoints were evaluated in subsets of these areas, based on availability of appropriate studies (U.S. EPA, 2014a, Chapter 7).

[101] In the epidemiologic studies that provide the health basis for HREA risk assessments, concentration-response relationships are based on daytime O_3 concentrations, averaged across multiple monitors within study areas. These daily averages are used as surrogates for the spatial and temporal patterns of exposures in study populations. Consistent with this approach, the HREA epidemiologic-based risk estimates also utilize daytime O_3 concentrations, averaged across monitors, as surrogates for population exposures. In this notice, these averaged

for the years 2007 and 2009 in order to provide estimates of risk for a year with generally higher O_3 concentrations (2007) and a year with generally lower O_3 concentrations (2009) (U.S. EPA, 2014a, section 7.1.1).

In considering these estimates, the PA notes that HREA conclusions reflect somewhat lower confidence in epidemiologic-based risk estimates than in estimates of O_3 exposures of concern and O_3-induced lung function decrements (U.S. EPA, 2014a, section 9.6). In particular, the HREA highlights the unexplained heterogeneity in effect estimates between locations, the potential for exposure measurement errors, and uncertainty in the interpretation of the shape of concentration-response functions at lower O_3 concentrations (U.S. EPA, 2014a, section 9.6). The HREA also concludes that lower confidence should be placed in the results of the assessment of respiratory mortality risks associated with long-term O_3 exposures, primarily because that analysis is based on only one study, though that study is well-designed, and because of the uncertainty in that study about the existence and identification of a potential threshold in the concentration-response function (U.S. EPA, 2014a, section 9.6). These and other uncertainties are considered in the PA in reaching conclusions on the current and alternative standards (U.S. EPA, 2014c, sections 3.4, 4.6).

Key observations from the PA are summarized below for mortality and morbidity risks associated with air quality adjusted to simulate just meeting the current O_3 NAAQS. These include key observations for estimates of total (nonaccidental) mortality associated with short-term O_3 concentrations, respiratory morbidity associated with short-term O_3 concentrations, and

---

concentrations are referred to as "area-wide" O_3 concentrations. Area-wide concentrations are discussed in more detail in section 3.1.4 of the PA (U.S. EPA, 2014c).

respiratory mortality associated with long-term O_3 concentrations (U.S. EPA, 2014c, section 3.2.3.2).

With regard to total mortality or morbidity associated with short-term O_3, the PA notes the following for air quality adjusted to just meet the current standard:

(1) When air quality was adjusted to the current standard for the 2007 model year (the year with generally "higher" O_3-associated risks), 10 of 12 urban study areas exhibited either decreases or virtually no change in estimates of the number of O_3-associated deaths (U.S. EPA, 2014a, Appendix 7B). Increases were estimated in two of the urban study areas (Houston, Los Angeles)[102] (U.S. EPA, 2014a, Appendix 7B).[103]

(2) In focusing on total risk, the current standard is estimated to allow thousands of O_3-associated deaths per year in the urban study areas. In focusing on the risks associated with the upper portions of distributions of ambient concentrations (area-wide

[102] As discussed above (II.C.1), in locations and time periods when NO_X is predominantly contributing to O_3 formation (e.g., downwind of important NO_X sources, where the highest O_3 concentrations often occur), model-based adjustment to the current and alternative standards decreases estimated ambient O_3 concentrations compared to recent monitored concentrations (U.S. EPA, 2014a, section 4.3.3.2). In contrast, in locations and time periods when NO_X is predominantly contributing to O_3 titration (e.g., in urban centers with high concentrations of NO_X emissions, where ambient O_3 concentrations are often suppressed and thus relatively low), model-based adjustment increases ambient O_3 concentrations compared to recent monitored concentrations (U.S. EPA, 2014a, section 4.3.3.2). Changes in epidemiology-based risk estimates depend on the balance between the daily decreases in high O_3 concentrations and increases in low O_3 concentrations following the model-based air quality adjustment. Commenting on this issue, CASAC noted that "controls designed to reduce the peak levels of ozone (e.g., the 4th highest annual MDA8) may not be effective at reducing lower levels of ozone on more typical days and may actually increase ozone levels on days where ozone concentrations are low" (Frey 2014a, p. 2). CASAC further noted that risk results "suggest that the ozone-related health risks in the urban cores can increase for some of the cities as ozone NAAQS alternatives become more stringent. This is because reductions in nitrogen oxides emissions can lead to less scavenging of ozone and free radicals, resulting in locally higher levels of ozone" (Frey 2014c, p. 10).

[103] For the 2009 adjusted year (i.e., the year with generally lower O_3 concentrations), changes in risk were generally smaller than in 2007 (i.e., most changes about 2% or smaller). Increases were estimated for Houston, Los Angeles, and New York City.

concentrations ≥ 40, 60 ppb), the current standard is estimated to allow hundreds to thousands of O_3-associated deaths per year in the urban study areas.

(3) The current standard is estimated to allow tens to thousands of O_3-associated morbidity events per year (i.e., respiratory-related hospital admissions, emergency department visits, and asthma exacerbations).

With regard to respiratory mortality associated with long-term O_3, the PA notes the following for air quality adjusted to just meet the current standard:

(1) Based on a linear concentration-response function, the current standard is estimated to allow thousands of O_3-associated respiratory deaths per year in the urban study areas.

(2) Based on threshold models, HREA sensitivity analyses indicate that the number of respiratory deaths associated with long-term O_3 concentrations could potentially be considerably lower (i.e., by more than 75% if a threshold exists at 40 ppb, and by about 98% if a threshold exists at 56 ppb) (U.S. EPA, 2014a, Figure 7-9).[104]

3. Policy Assessment Conclusions on the Current Standard

As an initial matter, the PA concludes that reducing precursor emissions to achieve O_3 concentrations that meet the current standard will provide important improvements in public health protection. This initial conclusion is based on (1) the strong body of scientific evidence

[104] Risk estimates for respiratory mortality associated with long-term O_3 exposures are based on the study by Jerrett et al. (2009) (U.S. EPA, 2014a, Chapter 7). As discussed above (II.B.2.b.iv) and in the PA (U.S. EPA, 2014c, section 3.1.4.3), Jerrett et al. (2009) reported that when seasonal averages of 1-hour daily maximum O_3 concentrations ranged from 33 to 104 ppb, there was no statistical deviation from a linear concentration-response relationship between O_3 and respiratory mortality across 96 U.S. cities (U.S. EPA, 2013a, section 7.7). However, the authors reported "limited evidence" for an effect threshold at an O_3 concentration of 56 ppb (p=0.06). In communications with EPA staff (Sasser, 2014), the study authors indicated that it is not clear whether a threshold model is a better predictor of respiratory mortality than the linear model, and that "considerable caution should be exercised in accepting any specific threshold."

indicating a wide range of adverse health outcomes attributable to exposures to O_3 concentrations commonly found in the ambient air and (2) estimates indicating decreased occurrences of O_3 exposures of concern and decreased health risks upon meeting the current standard, compared to recent air quality.

In particular, the PA concludes that strong support for this initial conclusion is provided by controlled human exposure studies of respiratory effects, and by quantitative estimates of exposures of concern and lung function decrements based on information in these studies. Analyses in the HREA estimate that the percentages of children (i.e., all children and children with asthma) in urban study areas experiencing exposures of concern, or experiencing abnormal and potentially adverse lung function decrements, are consistently lower for air quality that just meets the current O_3 standard than for recent air quality. The HREA estimates such reductions consistently across the urban study areas evaluated and throughout various portions of individual urban study areas, including in urban cores and the portions of urban study areas surrounding urban cores. These reductions in exposures of concern and O_3-induced lung function decrements reflect the consistent decreases in the highest O_3 concentrations following reductions in precursor emissions to meet the current standard. Thus, populations in both urban and non-urban areas would be expected to experience important reductions in O_3 exposures and O_3-induced lung function risks upon meeting the current standard.[105]

The PA further concludes that support for this initial conclusion is also provided by estimates of O_3-associated mortality and morbidity based on application of concentration-response relationships from epidemiologic studies to air quality adjusted to just meet the current

[105] As discussed above (II.C.1), CASAC recommended that the EPA evaluate how health risks in urban centers, as well as outside urban centers, change upon reducing NO_X emissions, given the varying impacts of NO_X emissions reductions on ambient O_3 concentrations.

standard. These estimates, which are based on the assumption that concentration-response relationships are linear over entire distributions of ambient O_3 concentrations, are associated with uncertainties that complicate their interpretation (II.C.3). However, risk estimates for effects associated with short- and long-term O_3 exposures, combined with the HREA's national analysis of O_3 responsiveness to reductions in precursor emissions and the consistent reductions estimated for the highest ambient O_3 concentrations, suggest that O_3-associated mortality and morbidity would be expected to decrease nationwide following reductions in precursor emissions to meet the current O_3 standard.

Reductions in O_3 precursor emissions (i.e., NO_X) could also increase public health protection by reducing the ambient concentrations of pollutants other than O_3. For example, in their advice on the second draft HREA CASAC acknowledged the potential for ambient NO_2 concentrations to be affected by changes in NO_X emissions (Frey, 2014a, p. 10). Consistent with this, the PA notes that NO_X emissions contribute to ambient NO_2, and that NO_X and VOCs can contribute to secondary formation of $PM_{2.5}$ constituents, including ammonium sulfate (NH_4SO_4), ammonium nitrate (NH_4NO_3), and organic carbon (OC). Therefore, at some times and in some locations, control strategies that would reduce NO_X emissions (i.e., to meet an O_3 standard) could reduce ambient concentrations of NO_2 and $PM_{2.5}$, resulting in health benefits beyond those directly associated with reducing ambient O_3 concentrations.

After reaching the initial conclusion that meeting the current primary O_3 standard will provide important improvements in public health protection, and that it is not appropriate to consider a standard that is less protective than the current standard, the PA considers the adequacy of the public health protection that is provided by the current standard. In considering the available scientific evidence, exposure/risk information, advice from CASAC (II.D.4,

below), and input from the public, the PA reaches the conclusion that the available evidence and information clearly call into question the adequacy of public health protection provided by the current primary standard. In reaching this conclusion, the PA notes that evidence from controlled human exposure studies provides strong support for the occurrence of adverse respiratory effects following exposures to O_3 concentrations below the level of the current standard. Epidemiologic studies provide support for the occurrence of adverse respiratory effects and mortality under air quality conditions that would likely meet the current standard. In addition, based on the analyses in the HREA, the PA concludes that the exposures and risks projected to remain upon meeting the current standard are indicative of risks that can reasonably be judged to be important from a public health perspective. Thus, the PA concludes that the evidence and information provide strong support for giving consideration to revising the current primary standard in order to provide increased public health protection against an array of adverse health effects that range from decreased lung function and respiratory symptoms to more serious indicators of morbidity (e.g., including emergency department visits and hospital admissions), and mortality. In consideration of all of the above, the PA draws the conclusion that it is appropriate for the Administrator to consider revision of the current primary O_3 standard to provide increased public health protection.

4. CASAC Advice

Following the 2008 decision to revise the primary O_3 standard by setting the level at 0.075 ppm (75 ppb), CASAC strongly questioned whether the standard met the requirements of the CAA. In September 2009, the EPA announced its intention to reconsider the 2008 standards, issuing a notice of proposed rulemaking in January 2010 (75 FR 2938). Soon after, the EPA solicited CASAC review of that proposed rule and in January 2011, solicited additional advice.

This proposal was based on the scientific and technical record from the 2008 rulemaking, including public comments and CASAC advice and recommendations. As further described above (I.C), in the fall of 2011, the EPA did not revise the standard as part of the reconsideration process but decided to defer decisions on revisions to the O_3 standards to the next periodic review, which was already underway. Accordingly, in this section we describe CASAC's advice related to the 2008 final decision and the subsequent reconsideration, as well as its advice on this current review of the O_3 NAAQS that was initiated in September 2008.

In April 2008, the members of the CASAC Ozone Review Panel sent a letter to EPA stating "[I]n our most-recent letters to you on this subject—dated October 2006 and March 2007—the CASAC unanimously recommended selection of an 8-hour average Ozone NAAQS within the range of 0.060 to 0.070 parts per million [60 to 70 ppb] for the primary (human health-based) Ozone NAAQS" (Henderson, 2008). The letter continued:

> The CASAC now wishes to convey, by means of this letter, its additional, unsolicited advice with regard to the primary and secondary Ozone NAAQS. In doing so, the participating members of the CASAC Ozone Review Panel are unanimous in strongly urging you or your successor as EPA Administrator to ensure that these recommendations be considered during the next review cycle for the Ozone NAAQS that will begin next year … numerous medical organizations and public health groups have also expressed their support of these CASAC recommendations' … [The CASAC did] not endorse the new primary ozone standard as being sufficiently protective of public health. The CASAC—as the EPA's statutorily-established science advisory committee for advising you on the national ambient air quality standards—unanimously recommended decreasing the primary standard to within the range of 0.060–0.070 ppm [60 to 70 ppb]. It is the Committee's consensus scientific opinion that your decision to set the primary ozone standard above this range fails to satisfy the explicit stipulations of the Clean Air Act that you ensure an adequate margin of safety for all individuals, including sensitive populations.

In response to the EPA's solicitation of advice on the EPA's proposed rulemaking as part of the reconsideration, CASAC conveyed support (Samet, 2010).

> CASAC fully supports EPA's proposed range of 0.060 – 0.070 parts per million (ppm) for the 8-hour primary ozone standard. CASAC considers this range to be

> justified by the scientific evidence as presented in the Air Quality Criteria for Ozone and Related Photochemical Oxidants (March 2006) and Review of the National Ambient Air Quality Standards for Ozone: Policy Assessment of Scientific and Technical Information, OAQPS Staff Paper (July 2007). As stated in our letters of October 24, 2006, March 26, 2007 and April 7, 2008 to former Administrator Stephen L. Johnson, CASAC unanimously recommended selection of an 8-hour average ozone NAAQS within the range proposed by EPA (0.060 to 0.070 ppm). In proposing this range, EPA has recognized the large body of data and risk analyses demonstrating that retention of the current standard would leave large numbers of individuals at risk for respiratory effects and/or other significant health impacts including asthma exacerbations, emergency room visits, hospital admissions and mortality.

In response to EPA's request for additional advice on the reconsideration in 2011, CASAC reaffirmed their conclusion that "the evidence from controlled human and epidemiological studies strongly supports the selection of a new primary ozone standard within the 60 – 70 ppb range for an 8-hour averaging time" (Samet, 2011, p ii). As requested by the EPA, CASAC's advice and recommendations were based on the scientific and technical record from the 2008 rulemaking. In considering the record for the 2008 rulemaking, CASAC stated the following to summarize the basis for their conclusions (Samet, 2011, pp. ii to iii).

(1) The evidence available on dose-response for effects of O_3 shows associations extending to levels within the range of concentrations currently experienced in the United States.

(2) There is scientific certainty that 6.6-hour exposures with exercise of young, healthy, non-smoking adult volunteers to concentrations ≥ 80 ppb cause clinically relevant decrements of lung function.

(3) Some healthy individuals have been shown to have clinically relevant responses, even at 60 ppb.

(4) Since the majority of clinical studies involve young, healthy adult populations, less is known about health effects in such potentially ozone sensitive

populations as the elderly, children and those with cardiopulmonary disease. For these susceptible groups, decrements in lung function may be greater than in healthy volunteers and are likely to have a greater clinical significance.

(5) Children and adults with asthma are at increased risk of acute exacerbations on or shortly after days when elevated O_3 concentrations occur, even when exposures do not exceed the NAAQS concentration of 75 ppb.

(6) Large segments of the population fall into what the EPA terms a "sensitive population group,'' i.e., those at increased risk because they are more intrinsically susceptible (children, the elderly, and individuals with chronic lung disease) and those who are more vulnerable due to increased exposure because they work outside or live in areas that are more polluted than the mean levels in their communities.

With respect to evidence from epidemiologic studies, CASAC stated "while epidemiological studies are inherently more uncertain as exposures and risk estimates decrease (due to the greater potential for biases to dominate small effect estimates), specific evidence in the literature does not suggest that our confidence on the specific attribution of the estimated effects of ozone on health outcomes differs over the proposed range of 60-70 ppb" (Samet, 2011, p.10).

Following its review of the second draft PA in the current review, which considers an updated scientific and technical record since the 2008 rulemaking, CASAC concluded that "there is clear scientific support for the need to revise the standard" (Frey, 2014c, p. ii). In particular, CASAC noted the following (Frey, 2014c, p. 5):

> [T]he scientific evidence provides strong support for the occurrence of a range of adverse respiratory effects and mortality under air quality conditions that would

> meet the current standard. Therefore, CASAC unanimously recommends that the Administrator revise the current primary ozone standard to protect public health.[106]

In supporting these conclusions, CASAC judged that the strongest evidence comes from controlled human exposure studies of respiratory effects. The Committee specifically noted that "the combination of decrements in FEV_1 together with the statistically significant alterations in symptoms in human subjects exposed to 72 ppb ozone meets the American Thoracic Society's definition of an adverse health effect" (Frey, 2014c, p. 5). CASAC further judged that "if subjects had been exposed to ozone using the 8-hour averaging period used in the standard, adverse effects could have occurred at lower concentration" and that "the level at which adverse effects might be observed would likely be lower for more sensitive subgroups, such as those with asthma" (Frey, 2014c, p. 5).

With regard to lung function risk estimates based on information from controlled human exposure studies, CASAC concluded that "estimation of FEV1 decrements of ≥15% is appropriate as a scientifically relevant surrogate for adverse health outcomes in active healthy adults, whereas an FEV1 decrement of ≥10% is a scientifically relevant surrogate for adverse health outcomes for people with asthma and lung disease" (Frey, 2014c, p. 3). The Committee further concluded that "[a]sthmatic subjects appear to be at least as sensitive, if not more sensitive, than non-asthmatic subjects in manifesting O_3-induced pulmonary function decrements" (Frey, 2014c, p. 4). In considering estimates of the occurrence of these decrements in urban study areas, CASAC specifically noted that

[106] CASAC provided similar advice in their letter to the Administrator on the REA, stating that "The CASAC finds that the current primary NAAQS for ozone is not protective of human health and needs to be revised" (Frey, 2014a, p. 15).

the current standard is estimated to allow 11 to 22% of school age children to experience at least one day with an FEV_1 decrement $\geq$ 10% (Frey, 2014c, p. 7).

Although CASAC judged that controlled human exposure studies of respiratory effects provide the strongest evidence supporting their conclusion on the current standard, the Committee judged that there is also "sufficient scientific evidence based on epidemiologic studies for mortality and morbidity associated with short-term exposure to ozone at the level of the current standard" (Frey, 2014c, p. 5). In support of the biological plausibility of the associations reported in these epidemiologic studies, CASAC noted that "[r]ecent animal toxicological studies support identification of modes of action and, therefore, the biological plausibility associated with the epidemiological findings" (Frey, 2014c, p. 5).

Consistent with the advice of CASAC, several public commenters supported revising the primary O_3 standard to provide increased public health protection. In considering the available evidence as a basis for their views, these commenters generally noted that the health evidence is stronger in the current review than in past reviews, with new evidence for effects attributable to short- and long-term exposures, and new evidence for effects at lower O_3 exposure concentrations.

Other public commenters opposed considering revised standards. These commenters discussed a variety of reasons for their views. A number of commenters expressed the view that the EPA should not lower the level of the standard because a lower level would be closer to background O_3 concentrations. In addition, several commenters challenged the interpretation of the evidence presented in the ISA. With respect to the risk assessment, several commenters expressed the view that the EPA should only estimate risks above O_3 background concentrations, or above threshold

concentrations. Some commenters also expressed the view that, based on the mortality and morbidity risk estimates in the HREA, there is little to no difference between the risks estimated for the current O_3 standard and the risks estimated for revised standards with lower levels. These commenters concluded that the HREA and PA have not shown that the public health improvements likely to be achieved by a revised O_3 standard would be greater than the improvements likely to be achieved by the current standard.

5. Administrator's Proposed Conclusions Concerning the Adequacy of the Current Standard

This section discusses the Administrator's proposed conclusions related to the adequacy of the public health protection provided by the current primary O_3 standard, resulting in her proposed decision to revise that standard. These proposed conclusions, and her proposed decision, are based on the Administrator's consideration of the available scientific evidence, exposure/risk information, the comments and advice of CASAC, and public input received thus far, as summarized below.

As an initial matter, the Administrator concludes that reducing precursor emissions to achieve O_3 concentrations that meet the current primary O_3 standard will provide important improvements in public health protection, compared to recent air quality. In reaching this initial conclusion, she notes the discussion in section 3.4 of the PA (U.S. EPA, 2014c), summarized above (II.D.3). In particular, the Administrator notes that this initial conclusion is supported by (1) the strong body of scientific evidence indicating a wide range of adverse health outcomes attributable to exposures to O_3 at concentrations commonly found in the ambient air and (2) estimates indicating decreased occurrences of O_3 exposures of concern and decreased O_3-associated health risks upon meeting the current standard, compared to recent air quality. Thus,

she concludes that it would not be appropriate in this review to consider a standard that is less protective than the current standard.[107]

After reaching the initial conclusion that meeting the current primary O_3 standard will provide important improvements in public health protection, and that it is not appropriate to consider a standard that is less protective than the current standard, the Administrator next considers the adequacy of the public health protection that is provided by the current standard. In doing so, the Administrator first notes that studies evaluated since the completion of the 2006 O_3 AQCD support and expand upon the strong body of evidence that, in the last review, indicated a causal relationship between short-term O_3 exposures and respiratory health effects. This is the strongest causality finding possible under the ISA's hierarchical system for classifying weight of evidence for causation. Together, experimental and epidemiologic studies support conclusions regarding a continuum of O_3 respiratory effects ranging from small reversible changes in pulmonary function, and pulmonary inflammation, to more serious effects that can result in respiratory-related emergency department visits, hospital admissions, and premature mortality. Recent animal toxicology studies support descriptions of modes of action for these respiratory effects and augment support for biological plausibility for the role of O_3 in reported effects. With regard to mode of action, evidence indicates that antioxidant capacity may modify the risk of respiratory morbidity associated with O_3 exposure, and that the inherent capacity to quench (based on individual antioxidant capacity) can be overwhelmed, especially with exposure to elevated concentrations of O_3. In addition, based on the consistency of findings across studies

[107] While not analyzed quantitatively, consistent with CASAC advice (Frey, 2014a, p. 10), the Administrator notes that reductions in O_3 precursor emissions (e.g., NO_X; VOC) to achieve O_3 concentrations that meet the current standard could also increase public health protection by reducing the ambient concentrations of pollutants other than O_3 (i.e., $PM_{2.5}$, NO_2).

and evidence for the coherence of results from different scientific disciplines, evidence indicates that certain populations are at increased risk of experiencing O_3-related effects, including the most severe effects. These include populations and lifestages identified in previous reviews (i.e., people with asthma, children, older adults, outdoor workers) and populations identified since the last review (i.e., people with certain genotypes related to antioxidant and/or anti-inflammatory status; people with reduced intake of certain antioxidant nutrients, such as Vitamins C and E).

The Administrator further notes that evidence for adverse respiratory health effects attributable to long-term, or repeated short-term, O_3 exposures is much stronger than in previous reviews, and the ISA concludes that there is "likely to be" a causal relationship between such O_3 exposures and adverse respiratory health effects (the second strongest causality finding). Uncertainties related to the extrapolation of data generated by rodent toxicology studies to the understanding of health effects in humans have been reduced by studies in non-human primates and by recent epidemiologic studies. The evidence available in this review includes new epidemiologic studies using a variety of designs and analysis methods, conducted by different research groups in different locations, evaluating the relationships between long-term O_3 exposures and measures of respiratory morbidity and mortality. New evidence supports associations between long-term O_3 exposures and the development of asthma in children, with several studies reporting interactions between genetic variants and such O_3 exposures. Studies also report associations between long-term O_3 exposures and asthma prevalence, asthma severity and control, respiratory symptoms among asthmatics, and respiratory mortality.

In considering the O_3 exposure concentrations reported to elicit respiratory effects, the Administrator agrees with the conclusions of the PA and with the advice of CASAC (Frey, 2014c) that controlled human exposure studies provide the most certain evidence indicating the

occurrence of health effects in humans following exposures to specific O_3 concentrations. In particular, as discussed further in section II.E.4.d below, she notes that the effects reported in controlled human exposure studies are due solely to O_3 exposures, and interpretation of study results is not complicated by the presence of co-occurring pollutants or pollutant mixtures (as is the case in epidemiologic studies). Therefore, she places the most weight on information from these controlled human exposure studies.

In considering the evidence from controlled human exposure studies, the Administrator first notes that these studies have reported a variety of respiratory effects in healthy adults following exposures to O_3 concentrations of 60, 72,[108] or 80 ppb, and higher. The largest respiratory effects, and the broadest range of effects, have been studied and reported following exposures of healthy adults to 80 ppb O_3 or higher, with most exposure studies conducted at these higher concentrations. She further notes that recent evidence includes controlled human exposure studies reporting the combination of lung function decrements and respiratory symptoms in healthy adults engaged in intermittent, moderate exertion following 6.6 hour exposures to concentrations as low as 72 ppb, and lung function decrements and pulmonary inflammation following exposures to O_3 concentrations as low as 60 ppb. As discussed below, compared to the evidence available in the last review, these studies have strengthened support for the occurrence of abnormal and adverse respiratory effects attributable to short-term exposures to O_3 concentrations below the level of the current standard.[109] The Administrator concludes that

[108] As noted above, for the 70 ppb target exposure concentration, Schelegle et al. (2009) reported that the actual mean exposure concentration was 72 ppb.
[109] Cf. *State of Misisssippi*. 744 F.3d 1350 ("Perhaps more studies like the Adams studies will yet reveal that the 0.060 ppm level produces significant adverse decrements that simply cannot be attributed to normal variation in lung function.").

such exposures to O_3 concentrations below the level of the current standard are potentially important from a public health perspective, given the following:

(1) The combination of lung function decrements and respiratory symptoms reported to occur in healthy adults following exposures to 72 ppb O_3 or higher, while at moderate exertion, meet ATS criteria for an adverse response. In specifically considering the 72 ppb exposure concentration, CASAC noted that "the combination of decrements in FEV_1 together with the statistically significant alterations in symptoms in human subjects exposed to 72 ppb ozone meets the American Thoracic Society's definition of an adverse health effect" (Frey, 2014c, p. 5).

(2) With regard to 60 ppb O_3, CASAC agreed that "a level of 60 ppb corresponds to the lowest exposure concentration demonstrated to result in lung function decrements large enough to be judged an abnormal response by ATS and that could be adverse in individuals with lung disease" (Frey, 2014c, p. 7). CASAC further noted that "a level of 60 ppb also corresponds to the lowest exposure concentration at which pulmonary inflammation has been reported" (Frey, 2014c, p. 7).

(3) The controlled human exposure studies reporting these respiratory effects were conducted in healthy adults, while at-risk groups (e.g., children, people with asthma) could experience larger and/or more serious effects. In their advice to the Administrator, CASAC concurred with this reasoning (Frey, 2014a, p. 14; Frey, 2014c, p. 5).

(4) These respiratory effects are coherent with the serious health outcomes that have been reported in epidemiologic studies evaluating exposure to O_3 (e.g., respiratory-related hospital admissions, emergency department visits, and mortality).

As noted above, the Administrator's proposed conclusions regarding the adequacy of the current primary O_3 standard place a large amount of weight on the results of controlled human exposure studies. In particular, given the combination of lung function decrements and respiratory symptoms following 6.6 hour exposures to O_3 concentrations as low as 72 ppb, and given CASAC advice regarding effects at 72 ppb along with ATS adversity criteria, she concludes that the evidence in this review supports the occurrence of adverse respiratory effects following exposures to O_3 concentrations lower than the level of the current standard.[110] As discussed below, the Administrator further considers information from the broader body of controlled human exposure studies within the context of quantitative estimates of exposures of concern and O_3-induced FEV_1 decrements.

In addition to controlled human exposure studies, the Administrator also considers what the available epidemiologic evidence indicates with regard to the adequacy of the public health protection provided by the current primary O_3 standard.[111] She notes that recent epidemiologic studies provide support, beyond that available in the last review, for associations between short-term O_3 exposures and a wide range of adverse respiratory outcomes (including respiratory-related hospital admissions, emergency department visits, and mortality) and with total mortality. Associations with morbidity and mortality are stronger during the warm or summer months, and remain robust after adjustment for copollutants.

---

[110] The use of evidence from controlled human exposure studies conducted in healthy adults to characterize the potential for adverse effects, including in at-risk groups such as children and asthmatics, is discussed in sections II.C.2 and II.C.3.a, above. CASAC advice on this issue is discussed in sections II.D.4 and II.E.4.c.

[111] As noted above, she places less weight on information from epidemiologic studies than on information from controlled human exposure studies.

In considering information from epidemiologic studies within the context of her conclusions on the adequacy of the current standard, the Administrator considers the extent to which available studies support the occurrence of O_3 health effect associations with air quality likely to be allowed by the current standard. In doing so, she places the most weight on air quality analyses in locations of single-city studies of short-term O_3, as discussed in more detail in section II.E.4.d below.[112] In particular, she notes that a U.S. single-city study reported associations with respiratory emergency department visits in children and adults in a location that would likely have met the current O_3 standard over the entire study period (Mar and Koenig, 2009). In addition, even in some single-city study locations where the current standard was likely not met (i.e., Silverman and Ito, 2010; Strickland et al., 2010), the Administrator notes PA analyses indicating that reported concentration-response functions and available air quality data support the occurrence of O_3-health effect associations on subsets of days with ambient O_3 concentrations below the level of the current standard (II.D.1). Compared to single-city studies, the Administrator notes additional uncertainty in interpreting the relationships between air quality in individual study cities and health effects based on multicity analyses (discussed further in sections II.D.1 and II.E.4.d). While such uncertainties limit the extent to which the Administrator bases her conclusions on air quality in locations of multicity epidemiologic

[112] As discussed in section II.E.4.d of this preamble, this judgment applies specifically to epidemiologic studies of short-term O_3 concentrations where multicity effect estimates are presented, based on combining the effect estimates from multiple individual cities, and where individual city effect estimates are not presented (as is the case for key multicity studies analyzed in the PA). Because these reported multicity effect estimates do not allow health effect associations to be disaggregated by individual city, it is not possible to assign the health effect association to the air quality in any one study location, or to the air quality in a subset of locations. In contrast, for epidemiologic studies of long-term concentrations, where multicity effect estimates are based on comparisons across cities, different judgments have been made with regard to the utility of multicity studies (see, e.g. 78 FR 3086 at 3103/2) (January 15, 2013) (and see discussion below of study by Jerrett et al., (2009)).

studies, she does note that O_3 associations with respiratory morbidity or mortality have been reported in several multicity studies when the majority of study locations (though not all study locations) would likely have met the current O_3 standard. When taken together, the Administrator reaches the conclusion that single-city epidemiologic studies and associated air quality information support the occurrence of O_3-associated hospital admissions and emergency department visits for ambient O_3 concentrations likely to have met the current standard, and that air quality analyses in locations of multicity studies provide some support for this conclusion for a broader range of effects (i.e., including mortality).

Beyond her consideration of the scientific evidence, the Administrator also considers the results of the HREA exposure and risk analyses in reaching initial conclusions regarding the adequacy of the current primary O_3 standard. In doing so, as noted above, she focuses primarily on exposure and risk estimates based on information from controlled human exposure studies (i.e., exposures of concern and O_3-induced lung function decrements). She places relatively less weight on epidemiologic-based risk estimates, noting that the overall conclusions from the HREA likewise reflect less confidence in estimates of epidemiologic-based risks than in estimates of exposures and lung function risks (U.S. EPA, 2014, section 9.6). Consistent with the conclusions in the PA, her determination to attach less weight to the epidemiologic-based risk estimates reflects her consideration of key uncertainties, including the heterogeneity in effect estimates between locations, the potential for exposure measurement errors, and uncertainty in the interpretation of the shape of concentration-response functions for O_3 concentrations in the lower portions of ambient distributions (U.S. EPA, 2014, section 9.6) (II.D.2). In particular, she concludes that lower confidence should be placed in the results of the assessment of respiratory mortality risks associated with long-term O_3 exposures, primarily because that analysis is based

on only one study (even though that study is well-designed) and because of the uncertainty in that study about the existence and level of a potential threshold in the concentration-response function (U.S. EPA, 2014a, section 9.6) (II.D.2).[113]

With regard to estimates of exposures of concern, the Administrator considers the extent to which the current standard provides protection against exposures to O_3 concentrations at or above 60, 70, and 80 ppb, noting CASAC advice that 60 ppb "is an appropriate exposure of concern for asthmatic children" (Frey, 2014c, p. 8). She further notes that while single exposures of concern could be adverse for some people, particularly for the higher benchmark concentrations (70, 80 ppb) where there is stronger evidence for the occurrence of adverse effects (discussed further in II.E.4.d, below), she becomes increasingly concerned about the potential for adverse responses as the frequency of occurrences increases.[114] In particular, she notes that repeated occurrences of the types of effects shown to occur following exposures of concern can have potentially adverse outcomes. For example, repeated occurrences of airway inflammation could potentially result in the induction of a chronic inflammatory state; altered pulmonary structure and function, leading to diseases such as asthma; altered lung host defense response to inhaled microorganisms; and altered lung response to other agents such as allergens or toxins (U.S. EPA, 2013a, section 6.2.3). Thus, the Administrator notes that the types of lung injury shown to occur following exposures to O_3 concentrations from 60 to 80 ppb, particularly if experienced repeatedly, provide a mode of action by which O_3 may cause other more serious

[113] CASAC also called into question the extent to which it is appropriate to place confidence in risk estimates for respiratory mortality (Frey, 2014a, p. 11).

[114] Not all people who experience an exposure of concern will experience an adverse effect (even members of at-risk populations). For most of the endpoints evaluated in controlled human exposure studies (with the exception of O_3-induced FEV_1 decrements, as discussed below), the number of those experiencing exposures of concern who will experience adverse effects cannot be reliably quantified.

effects (e.g., asthma exacerbations). Therefore, the Administrator places the most weight on estimates of two or more exposures of concern (i.e., as a surrogate for the occurrence of repeated exposures), though she also considers estimates of one or more, particularly for the 70 and 80 ppb benchmarks.

Consistent with CASAC advice (Frey, 2014c), the Administrator focuses on children in these analyses of O_3 exposures, noting that estimates for all children and asthmatic children are virtually indistinguishable (in terms of the percent estimated to experience exposures of concern). Though she focuses on children, she also recognizes that exposures to O_3 concentrations at or above 60 or 70 ppb could be of concern for adults. As discussed in the HREA and PA (and II.C.2.a, above), the patterns of exposure estimates across urban study areas, across years, and across air quality scenarios are similar in adults with asthma, older adults, all children, and children with asthma, though smaller percentages of adult populations are estimated to experience exposures of concern than children and children with asthma. Thus, the Administrator recognizes that the exposure patterns for children across years, urban study areas, and air quality scenarios are indicative of the exposure patterns in a broader group of at-risk populations that also includes asthmatic adults and older adults.

As illustrated in Table 1 (above), the Administrator notes that if the 15 urban study areas evaluated in the HREA were to just meet the current O_3 standard, fewer than 1% of children in those areas would be estimated to experience two or more exposures of concern at or above 70 ppb, though approximately 3 to 8% of children, including approximately 3 to 8% of asthmatic children, would be estimated to experience two or more exposures of concern to O_3

concentrations at or above 60 ppb[115] (based on estimates averaged over the years of analysis). To provide some perspective on these percentages, the Administrator notes that they correspond to almost 900,000 children in urban study areas, including about 90,000 asthmatic children, estimated to experience two or more exposures of concern at or above 60 ppb. Nationally, if the current standard were to be just met the number of children experiencing such exposures would be larger. In the worst-case year and location (i.e., year and location with the largest exposure estimates), the Administrator notes that over 2% of children are estimated to experience two or more exposures of concern at or above 70 ppb and over 14% are estimated to experience two or more exposures of concern at or above 60 ppb.

Although, as discussed above and in section II.E.4.d, the Administrator is less concerned about single occurrences of exposures of concern, she notes that even single occurrences can cause adverse effects in some people, particularly for the 70 and 80 ppb benchmarks. Therefore, she also considers estimates of one or more exposures of concern. As illustrated in Table 1 (above), if the 15 urban study areas evaluated in the HREA were to just meet the current O_3 standard, fewer than 1% of children in those areas would be estimated to experience one or more exposures of concern at or above 80 ppb (based on estimates averaged over the years of analysis). However, approximately 1 to 3% of children, including 1 to 3% of asthmatic children, would be estimated to experience one or more exposures of concern to O_3 concentrations at or above 70 ppb and approximately 10 to 17% would be estimated to experience one or more exposures of concern to O_3 concentrations at or above 60 ppb. In the worst-case year and location, the Administrator notes that over 1% of children are estimated to experience one or

[115] Almost no children in those areas would be estimated to experience two or more exposures of concern at or above 80 ppb.

more exposures of concern at or above 80 ppb, over 8% are estimated to experience one or more exposures of concern at or above 70 ppb, and about 26% are estimated to experience one or more exposures of concern at or above 60 ppb.

In addition to estimated exposures of concern, the Administrator also considers HREA estimates of the occurrence of O_3-induced lung function decrements. In doing so, she particularly notes CASAC advice that "estimation of FEV_1 decrements of ≥ 15% is appropriate as a scientifically relevant surrogate for adverse health outcomes in active healthy adults, whereas an FEV_1 decrement of ≥ 10% is a scientifically relevant surrogate for adverse health outcomes for people with asthma and lung disease" (Frey, 2014c, p. 3). The Administrator notes that while single occurrences of O_3-induced lung function decrements could be adverse for some people, as discussed above (II.B.3), a more general consensus view of the potential adversity of such decrements emerges as the frequency of occurrences increases. Therefore, the Administrator focuses primarily on the estimates of two or more O_3-induced lung function decrements.

When averaged over the years evaluated in the HREA, the Administrator notes that the current standard is estimated to allow about 1 to 3% of children in the 15 urban study areas (corresponding to almost 400,000 children) to experience two or more O_3-induced lung function decrements ≥ 15%, and to allow about 8 to 12% of children (corresponding to about 180,000 asthmatic children[116]) to experience two or more O_3-induced lung function decrements ≥ 10%. Nationally, larger numbers of children would be expected to experience such O_3-induced decrements if the current standard were to be just met. The current standard is also estimated to

[116] As noted above, CASAC concluded that "an FEV1 decrement of ≥10% is a scientifically relevant surrogate for adverse health outcomes for people with asthma and lung disease" (Frey, 2014c, p. 3) and that such decrements "could be adverse for people with lung disease" (Frey, 2014c, p. 7).

allow about 3 to 5% of children in the urban study areas to experience one or more decrements ≥ 15% and about 14 to 19% of children to experience one or more decrements ≥ 10%. In the worst-case year and location, the current standard is estimated to allow 4% of children in the urban study areas to experience two or more decrements ≥ 15% (and 7% to experience one or more such decrements) and 14% of children to experience two or more decrements ≥ 10% (and 22% to experience one or more such decrements).

In further considering the HREA results, the Administrator considers the epidemiology-based risk estimates. As discussed above, compared to the weight given to HREA estimates of exposures of concern and lung function risks, she places relatively less weight on epidemiology-based risk estimates. In giving some consideration to these risk estimates, the Administrator notes estimates of total risks (i.e., based on the full distributions of ambient O_3 concentrations) and risks associated with O_3 concentrations in the upper portions of ambient distributions. The Administrator notes that estimates of total risks are based on the assumption that concentration-response relationships remain linear over the entire distributions of ambient O_3 concentrations. With regard to total risks, she notes that the HREA estimates thousands of O_3-associated hospital admissions, emergency department visits, and deaths per year for air quality conditions associated with just meeting the current standard in the 12 urban study areas (II.C.3).

However, the Administrator also notes the increasing uncertainty associated with the shapes of concentration-response curves for O_3 concentrations in the lower portions of ambient distributions. She particularly notes that there is less certainty in the shape of concentration-response functions for area-wide O_3 concentrations at the lower ends of warm season distributions (i.e., below about 20 to 40 ppb depending on the O_3 metric, health endpoint, and study population) (U.S. EPA, 2013a, section 2.5.4.4). The Administrator further notes the

evidence from controlled human exposure studies, which provide the strongest support for O_3-induced effects following exposures to O_3 concentrations corresponding to the upper portions of typical ambient distributions (i.e., 60 ppb and above). Therefore, the Administrator judges it appropriate to focus on risks associated with O_3 concentrations in the upper portions of ambient distributions. Even when considering only area-wide O_3 concentrations from the upper portions of seasonal distributions, the Administrator notes that the current standard is estimated to allow hundreds to thousands of O_3-associated deaths per year in urban study areas (II.C.3).

Although the Administrator notes the HREA conclusions indicating somewhat less confidence in estimates of O_3-associated mortality and morbidity risks, compared to estimates of exposures of concern and risk of lung function decrements, she concludes that the general magnitude of mortality and morbidity risk estimates suggests the potential for a substantial number of O_3-associated deaths and adverse respiratory events to occur nationally, even when the current standard is met. She especially notes that this is the case based on the risks associated with the upper ends of distributions of ambient O_3 concentrations, where she has the greatest confidence in O_3-attributable effects.

In addition to the evidence and exposure/risk information discussed above, the Administrator also takes note of the CASAC advice in the current review and in the 2010 proposed reconsideration of the 2008 decision establishing the current standard. As discussed in more detail above, the current CASAC "finds that the current NAAQS for ozone is not protective of human health" and "unanimously recommends that the Administrator revise the current primary ozone standard to protect public health" (Frey, 2014c, p. 5). The prior CASAC O_3 Panel likewise recommended revision of the current standard to one with a lower level. This earlier recommendation was based entirely on the evidence and information in the record for the 2008

standard decision, which, as discussed above, has been substantially strengthened in the current review (Samet, 2011; Samet, 2012).

In consideration of all of the above, the Administrator proposes that the current primary O_3 standard is not adequate to protect public health, and that it should be revised to provide increased public health protection. This proposed decision is based on the Administrator's initial conclusions that the available evidence and exposure and risk information clearly call into question the adequacy of public health protection provided by the current primary standard and, therefore, that the current standard is not requisite to protect public health with an adequate margin of safety. With regard to the evidence, she specifically notes that (1) controlled human exposure studies provide support for the occurrence of adverse respiratory effects following exposures to O_3 concentrations below the level of the current standard (i.e., as low as 72 ppb), and that (2) single-city epidemiologic studies provide support for the occurrence of adverse respiratory effects under air quality conditions that would likely meet the current standard, with multicity studies providing some support for this conclusion for a broader range of effects (i.e., including mortality). Courts have repeatedly held that this type of evidence justifies an Administrator's conclusion that it is "appropriate" (within the meaning of section 109 (d)(1) of the CAA) to revise a primary NAAQS to provide further protection of public health.[117] In addition, based on the analyses in the HREA, the Administrator initially concludes that the exposures and risks projected to remain upon meeting the current standard can reasonably be judged to be important from a public health perspective. Thus, she reaches the proposed conclusion that the evidence and information, together with CASAC advice based on their consideration of that evidence and information, provide strong support for revising the current

[117] See e.g. *State of Mississippi*, 744 F. 3d at 1345; *American Farm Bureau*, 559 F. 3d at 525-26.

primary standard in order to increase public health protection against an array of adverse effects that range from decreased lung function and respiratory symptoms to more serious indicators of morbidity (e.g., including emergency department visits and hospital admissions), and mortality.

The Administrator solicits comment on her proposed decision to revise the current primary O_3 NAAQS, including on her considerations and proposed conclusions based on the scientific evidence, exposure/risk information, and CASAC advice. In doing so, she recognizes that some have expressed alternative approaches to viewing the evidence and information, including alternative approaches to viewing, evaluating, and weighing important uncertainties. In some cases, these alternative approaches have led some public commenters to recommend retaining the current standard. Given these alternative views, in addition to proposing to revise the current primary O_3 standard, the Administrator solicits comment on the option of retaining that standard. In doing so, she also solicits comment on the potential approaches to viewing the scientific evidence and exposure/risk information that could support a conclusion that the current standard is requisite to protect public health with an adequate margin of safety.

E. *Conclusions on the Elements of the Primary Standard*

Having reached the proposed conclusion that the currently available scientific evidence and exposure/risk information call into question the adequacy of the current O_3 standard, the Administrator next considers the range of alternative standards supported by that evidence and information. Consistent with her consideration of the adequacy of the current standard, the Administrator's proposed conclusions on alternative standards are informed by the available scientific evidence assessed in the ISA, exposure/risk information presented and assessed in the HREA, the evidence-based and exposure-/risk-based considerations and conclusions in the PA, CASAC advice, and input from members of the public. The sections below discuss the evidence

and exposure/risk information, CASAC advice and public input, and the Administrator's proposed conclusions, for the major elements of the NAAQS: indicator (II.E.1), averaging time (II.E.2), form (II.E.3), and level (II.E.4).

1. Indicator

In the last review, the EPA focused on O_3 as the most appropriate indicator for a standard meant to provide protection against ambient photochemical oxidants. In this review, while the complex atmospheric chemistry in which O_3 plays a key role has been highlighted, no alternatives to O_3 have been advanced as being a more appropriate indicator for ambient photochemical oxidants. More specifically, the ISA noted that O_3 is the only photochemical oxidant (other than NO_2) that is routinely monitored and for which a comprehensive database exists (U.S. EPA, 2013a, section 3.6). Data for other photochemical oxidants (e.g., PAN, H_2O_2, etc.) typically have been obtained only as part of special field studies. Consequently, no data on nationwide patterns of occurrence are available for these other oxidants; nor are extensive data available on the relationships of concentrations and patterns of these oxidants to those of O_3 (U.S. EPA, 2013a, section 3.6). In its review of the second draft PA, CASAC stated "The indicator of ozone is appropriate based on its causal or likely causal associations with multiple adverse health outcomes and its representation of a class of pollutants known as photochemical oxidants" (Frey, 2014c, p. ii).

In addition, the PA notes that meeting an O_3 standard can be expected to provide some degree of protection against potential health effects that may be independently associated with other photochemical oxidants, even though such effects are not discernible from currently available studies indexed by O_3 alone (U.S. EPA, 2014c, section 4.1). That is, since the precursor emissions that lead to the formation of O_3 generally also lead to the formation of other

photochemical oxidants, measures leading to reductions in population exposures to O_3 can generally be expected to lead to reductions in population exposures to other photochemical oxidants. In considering this information, and CASAC's advice, the Administrator reaches the proposed conclusion that O_3 remains the most appropriate indicator for a standard meant to provide protection against photochemical oxidants.[118]

2. Averaging Time

The EPA established the current 8-hour averaging time[119] for the primary O_3 NAAQS in 1997 (62 FR 38856). The decision on averaging time in that review was based on numerous controlled human exposure and epidemiologic studies reporting associations between 6 to 8 hour O_3 concentrations and adverse respiratory effects (62 FR 38861). It was also noted that a standard with a max 8-hour averaging time is likely to provide substantial protection against respiratory effects associated with 1-hour peak O_3 concentrations. Similar conclusions were reached in the last O_3 NAAQS review and thus, the 8-hour averaging time was retained in 2008.

In reaching a proposed conclusion on averaging time in the current review, the Administrator considers the extent to which the available evidence continues to support the appropriateness of a standard with an 8-hour averaging time. Specifically, the Administrator considers the extent to which the available information indicates that a standard with the current 8-hour averaging time provides appropriate protection against short- and long-term O_3 exposures.

a. Short-term

---

[118]The D.C. Circuit upheld the use of O_3 as the indicator for photochemical oxidants based on these same considerations. *American Petroleum Inst. v. Costle*, 665 F. 2d 1176, 1186 (D.C. Cir. 1981).

[119]This 8-hour averaging time reflects daily max 8-hour average O_3 concentrations.

As an initial consideration with respect to the most appropriate averaging time for the O_3 NAAQS, the Administrator notes that the strongest evidence for O_3-associated health effects is for respiratory effects following short-term exposures. More specifically, the Administrator notes the ISA conclusion that the evidence is "sufficient to infer a causal relationship" between short-term O_3 exposures and respiratory effects. The ISA also judges that for short-term O_3 exposures, the evidence indicates "likely to be causal" relationships with both cardiovascular effects and mortality (U.S. EPA, 2013a, section 2.5.2). Therefore, as in past reviews, the strength of the available scientific evidence provides strong support for a standard that protects the public health against short-term exposures to O_3.

In first considering the level of support available for specific short-term averaging times, the Administrator notes the evidence available from controlled human exposure studies. As discussed in more detail in chapter 3 of the PA, substantial health effects evidence from controlled human exposure studies demonstrates that a wide range of respiratory effects (e.g., pulmonary function decrements, increases in respiratory symptoms, lung inflammation, lung permeability, decreased lung host defense, and AHR) occur in healthy adults following 6.6 hour exposures to O_3 (U.S. EPA, 2013a, section 6.2.1.1). Compared to studies evaluating shorter exposure durations (e.g., 1-hour), studies evaluating 6.6 hour exposures in healthy adults have reported respiratory effects at lower O_3 exposure concentrations and at more moderate levels of exertion.

The Administrator also notes the strength of evidence from epidemiologic studies that have evaluated a wide variety of populations (e.g., including at-risk lifestages and populations, such as children and people with asthma, respectively). A number of different averaging times are used in O_3 epidemiologic studies, with the most common being the max 1-hour concentration

within a 24-hour period (1-hour max), the max 8-hour average concentration within a 24-hour period (8-hr max), and the 24-hour average. These studies are summarized above and assessed in detail in chapter 6 of the ISA (U.S. EPA, 2013a). Limited evidence from time-series and panel epidemiologic studies comparing risk estimates across averaging times does not indicate that one exposure metric is more consistently or strongly associated with respiratory health effects or mortality, though the ISA notes some evidence for "smaller O_3 risk estimates when using a 24-hour average exposure metric" (U.S. EPA, 2013a, section 2.5.4.2; p. 2-31). For single- and multi-day average O_3 concentrations, lung function decrements were associated with 1-hour max, 8-hour max, and 24-hour average ambient O_3 concentrations, with no strong difference in the consistency or magnitude of association among the averaging times (U.S. EPA, 2013a, p. 6-71). Similarly, in studies of short-term exposure to O_3 and mortality, Smith et al. (2009) and Darrow et al. (2011) have reported high correlations between risk estimates calculated using 24-hour average, 8-hour max, and 1-hour max averaging times (U.S. EPA, 2013a, p. 6-253). Thus, the Administrator notes that the epidemiologic evidence alone does not provide a strong basis for distinguishing between the appropriateness of 1-hour, 8-hour, and 24-hour averaging times.

Considering the health information discussed above, the Administrator concludes that an 8-hour averaging time remains appropriate for addressing health effects associated with short-term exposures to ambient O_3. An 8-hour averaging time is similar to the exposure periods evaluated in controlled human exposure studies, including recent studies that provide evidence for respiratory effects following exposures to O_3 concentrations below the level of the current standard. In addition, epidemiologic studies provide evidence for health effect associations with 8-hour O_3 concentrations, as well as with 1-hour and 24-hour concentrations. As in previous reviews, the Administrator notes that a standard with an 8-hour averaging time (combined with

an appropriate standard form and level) would also be expected to provide substantial protection against health effects attributable to 1-hour and 24-hour exposures (e.g., 62 FR 38861, July 18, 1997). This conclusion is consistent with the advice received from CASAC that "the current 8-hour averaging time is justified by the combined evidence from epidemiologic and clinical studies" (Frey, 2014c, p. 6).

b. Long-term

The ISA concludes that the evidence for long-term O_3 exposures indicates that there is "likely to be a causal relationship" with respiratory effects (U.S. EPA, 2013a, chapter 7). Thus, in this review the Administrator also considers the extent to which currently available evidence and exposure/risk information suggests that a standard with an 8-hour averaging time can provide protection against respiratory effects associated with longer term exposures to ambient O_3.

In considering this issue in the last review of the O_3 NAAQS, the Staff Paper noted that "because long-term air quality patterns would be improved in areas coming into attainment with an 8-hr standard, the potential risk of health effects associated with long-term exposures would be reduced in any area meeting an 8-hr standard" (U.S. EPA, 2007, p. 6-57). In the current review, the PA further evaluates this issue, with a focus on the long-term O_3 metrics reported to be associated with mortality or morbidity in recent epidemiologic studies. As discussed in section 3.1.3 of the PA (U.S. EPA, 2014c, section 4.2), much of the recent evidence for such associations is based on studies that defined long-term O_3 in terms of seasonal averages of daily maximum 1-hour or 8-hour concentrations.

As an initial consideration, the Administrator notes the risk results from the HREA for respiratory mortality associated with long-term O_3 concentrations. These HREA analyses

indicate that as air quality is adjusted to just meet the current 8-hour standard, most urban study areas are estimated to experience reductions in respiratory mortality associated with long-term O_3 concentrations based on the seasonal averages of 1-hour daily maximum O_3 concentrations evaluated in the study by Jerrett et al. (2009) (U.S. EPA, 2014a, chapter 7).[120] As air quality is adjusted to meet lower alternative standard levels, for standards based on 3-year averages of the annual fourth-highest daily maximum 8-hour O_3 concentrations, respiratory mortality risks are estimated to be reduced further in urban study areas. This analysis indicates that an O_3 standard with an 8-hour averaging time, when coupled with an appropriate form and level, can reduce respiratory mortality reported to be associated with long-term O_3 concentrations.

In further considering the study by Jerrett et al. (2009), the Administrator notes the PA comparison of long-term O_3 concentrations following model adjustment in urban study areas (i.e., adjusted to meet the current and alternative 8-hour standards) to the concentrations present in study cities that provided the basis for the positive and statistically significant association with respiratory mortality. As indicated in Table 4-3 of the PA (U.S. EPA, 2014c, section 4.2), this comparison suggests that a standard with an 8-hour averaging time can decrease seasonal averages of 1-hour daily maximum O_3 concentrations, and can maintain those O_3 concentrations below the seasonal average concentration where the study indicates the most confidence in the reported concentration-response relationship with respiratory mortality (U.S. EPA, 2014c, sections 4.2 and 4.4.1).

The Administrator also notes that the HREA conducted analyses evaluating the impacts of reducing regional NO_X emissions on the seasonal averages of daily maximum 8-hour O_3

[120] Though the Administrator also notes important uncertainties associated with these risk estimates, as discussed above (II.C.3.b).

concentrations. Seasonal averages of 8-hour daily max O_3 concentrations reflect long-term metrics that have been reported to be associated with respiratory morbidity effects in several recent O_3 epidemiologic studies (e.g., Islam et al., 2008; Lin et al., 2008; Salam et al., 2009). The HREA analyses indicate that the large majority of the U.S. population lives in locations where reducing NO_X emissions would be expected to result in decreases in seasonal averages of daily max 8-hour ambient O_3 concentrations (U.S. EPA, 2014a, chapter 8). Thus, consistent with the respiratory mortality risk estimates noted above, these analyses suggest that reductions in O_3 precursor emissions in order to meet a standard with an 8-hour averaging time would also be expected to reduce the long-term O_3 concentrations that have been reported in recent epidemiologic studies to be associated with respiratory morbidity.

c. Administrator's proposed conclusion on averaging time

Taken together, the Administrator notes that the analyses summarized above indicate that a standard with an 8-hour averaging time, coupled with the current 4th high form and an appropriate level, would be expected to provide appropriate protection against the short- and long-term O_3 concentrations that have been reported to be associated with respiratory morbidity and mortality. The CASAC agreed with this conclusion, stating that "[t]he current 8-hour averaging time is justified by the combined evidence from epidemiologic and clinical studies" and that "[t]he 8-hour averaging window also provides protection against the adverse impacts of long-term ozone exposures, which were found to be "likely causal" for respiratory effects and premature mortality" (Frey, 2014c, p. 6). Therefore, considering the available evidence and exposure risk information, and CASAC's advice, the Administrator proposes to retain the current 8-hour averaging time, and not to set an additional standard with a different averaging time.

3. Form

The "form" of a standard defines the air quality statistic that is to be compared to the level of the standard in determining whether an area attains that standard. The foremost consideration in selecting a form is the adequacy of the public health protection provided by the combination of the form and the other elements of the standard. In this review, the Administrator considers the extent to which the available evidence and/or information continue to support the appropriateness of a standard with the current form, defined by the 3-year average of annual 4th-highest 8-hour daily maximum O_3 concentrations.

The EPA established the current form of the primary O_3 NAAQS in 1997 (62 FR 38856). Prior to that time, the standard had a "1-expected-exceedance" form.[121] An advantage of the current concentration-based form recognized in the 1997 review is that such a form better reflects the continuum of health effects associated with increasing ambient O_3 concentrations. Unlike an expected exceedance form, a concentration-based form gives proportionally more weight to years when 8-hour O_3 concentrations are well above the level of the standard than years when 8-hour O_3 concentrations are just above the level of the standard.[122] It was judged appropriate to give more weight to higher O_3 concentrations, given that available health evidence indicated a continuum of effects associated with exposures to varying concentrations of O_3, and given that the extent to which public health is affected by exposure to ambient O_3 is related to the

[121]For a standard with a 1-expected-exceedance form to be met at an air quality monitoring site, the fourth-highest air quality value in 3 years, given adjustments for missing data, must be less than or equal to the level of the standard.

[122] As discussed (61 FR 65731), this is because with an exceedance-based form, days on which the ambient O_3 concentration is well above the level of the standard are given equal weight to those days on which the O_3 concentration is just above the standard (i.e., each day is counted as one exceedance), even though the public health impact of such days would be very different. With a concentration-based form, days on which higher O_3 concentrations occur would weigh proportionally more than days with lower O_3 concentrations since the actual concentrations are used directly to calculate whether the standard is met or violated.

actual magnitude of the O_3 concentration, not just whether the concentration is above a specified level.

During the 1997 review, the EPA considered a range of alternative "concentration-based" forms, including the second-, third-, fourth- and fifth-highest daily maximum 8-hour concentrations in an O_3 season. The fourth-highest daily maximum was selected, recognizing that a less restrictive form (e.g., fifth highest) would allow a larger percentage of sites to experience O_3 peaks above the level of the standard, and would allow more days on which the level of the standard may be exceeded when the site attains the standard (62 FR 38856). Consideration was also given to setting a standard with a form that would provide a margin of safety against possible but uncertain chronic effects, and would provide greater stability to ongoing control programs.[123] A more restrictive form was not selected, recognizing that the differences in the degree of protection afforded by the alternatives were not well enough understood to use any such differences as a basis for choosing the most restrictive forms (62 FR 38856).

In the 2008 review, the EPA additionally considered the potential value of a percentile-based form. In doing so, the EPA recognized that such a statistic is useful for comparing datasets of varying length because it samples approximately the same place in the distribution of air quality values, whether the dataset is several months or several years long. However, the EPA concluded that a percentile-based statistic would not be effective in ensuring the same degree of public health protection across the country. Specifically, a percentile-based form would allow more days with higher air quality values in locations with longer O_3 seasons relative to places

[123] See *American Trucking Assn's v. EPA*, 283 F. 3d at 374-75 (less stable implementation programs may be less effective, and therefore the EPA can consider programmatic stability in determining the form of a NAAQS).

with shorter O_3 seasons. Thus, in the 2008 review, the EPA concluded that a form based on the nth-highest maximum O_3 concentration would more effectively ensure that people who live in areas with different length O_3 seasons receive the same degree of public health protection.

Based on analyses of forms specified in terms of an nth-highest concentration (n ranged from 3 to 5), advice from CASAC, and public comment,[124] the Administrator concluded that a 4th-highest daily maximum should be retained (73 FR 16465, March 27, 2008). In reaching this decision, the Administrator recognized that "there is not a clear health-based threshold for selecting a particular nth-highest daily maximum form of the standard" and that "the adequacy of the public health protection provided by the combination of the level and form is a foremost consideration" (73 FR 16475, March 27, 2008). Based on this, the Administrator judged that the existing form (4th-highest daily maximum 8-hour average concentration) should be retained, recognizing the increase in public health protection provided by combining this form with a lower standard level (i.e., 75 ppb).

The Administrator also recognized that it is important to have a form that provides stability with regard to implementation of the standard. In the case of O_3, for example, he noted the importance of a form insulated from the impacts of the meteorological events that are conducive to O_3 formation. Such events could have the effect of reducing public health protection, to the extent they result in frequent shifts in and out of attainment due to meteorological conditions. The Administrator noted that such frequent shifting could disrupt an

---

[124]In the 2008 review, one group of commenters expressed the view that the standard was not adequate and supported a more health-protective form (e.g., a second- or third-highest daily max form). Another group of commenters expressed the view that the standard was adequate and did not provide any views on alternative forms that would be appropriate should the Administrator consider revisions to the standard. The Administrator considered the protection afforded by the combination of level and form in revising the standard in 2008 to 75 ppb, as a 3-year average of the annual fourth-highest daily max 8-hour concentrations (73 FR 16475, March 27, 2008).

area's ongoing implementation plans and associated control programs (73 FR 16474, March 27, 2008). In his final decision, the Administrator judged that a 4th high form "provides a stable target for implementing programs to improve air quality" (73 FR 16475, March 27, 2008).

In the current review, the Administrator considers the extent to which newly available information provides support for the current form. In so doing, she takes note of the conclusions of prior reviews summarized above. She recognizes the value of an nth-high statistic over that of an expected exceedance or percentile-based form in the case of the O_3 standard, for the reasons summarized above. The Administrator additionally takes note of the importance of stability in implementation to achieving the level of protection specified by the NAAQS. Specifically, she notes that to the extent areas engaged in implementing the O_3 NAAQS frequently shift from meeting the standard to violating the standard, it is possible that ongoing implementation plans and associated control programs could be disrupted, thereby reducing public health protection.

In light of this, while giving foremost consideration to the adequacy of public health protection provided by the combination of all elements of the standard, including the form, the Administrator considers particularly findings from prior reviews with regard to the use of the nth-high metric. As noted above, the 4th-highest daily maximum was selected in recognition of the public health protection provided by this form, when coupled with an appropriate averaging time and level, and recognizing that such a form can provide stability for implementation programs. The Administrator concludes that the currently available evidence and information do not call into question these conclusions from previous reviews. In reaching this conclusion, the Administrator notes that CASAC concurred that the O_3 standard should be based on the fourth highest, daily maximum 8-hour average value (averaged over 3 years), stating that this form "provides health protection while allowing for atypical meteorological conditions that can lead to

abnormally high ambient ozone concentrations which, in turn, provides programmatic stability" (Frey, 2014c, p. 6). Thus, a standard with the current 4th high form, coupled with a level lower than 75 ppb as discussed below, would be expected to increase public health protection relative to the current standard while continuing to provide stability for implementation programs. Therefore, the Administrator proposes to retain the current 4th-highest daily maximum form for an O_3 standard with an 8-hour averaging time and a revised level, as discussed below.

4. Level

The Administrator next considers the extent to which alternative levels below 75 ppb could provide greater protection than the current primary standard against short- and long- term exposures to O_3 in ambient air, for a standard based on the 3-year average of the annual 4th highest daily maximum 8-hour O_3 concentration. In doing so, she particularly notes the evidence-based and exposure-/risk-based considerations in the PA, which take into account the experimental and epidemiologic evidence as assessed in the ISA; quantitative estimates of O_3 exposures and health risks in at-risk populations provided by the HREA; uncertainties and limitations associated with this evidence and information; CASAC advice; and public input (U.S. EPA, 2014c, sections 4.4 and 4.5). Section II.E.4.a below summarizes the PA's approach to considering the scientific evidence and the exposure/risk information related to level of the primary standard. Section II.E.4.b presents the PA's conclusions on alternative primary O_3 standard levels. Section II.E.4.c summarizes CASAC advice on the level of the primary standard, and public input received thus far. Section II.E.4.d presents the Administrator's proposed conclusions on primary O_3 standard levels.

a. PA approach to considering the evidence and information related to alternative levels of the primary standard

The PA's approach to reaching conclusions on alternative standard levels focuses on the evidence from controlled human exposure and epidemiologic studies, as assessed in the ISA (U.S. EPA, 2013a), and the exposure and health risk analyses presented in the HREA (U.S. EPA, 2014a). This approach is discussed in detail in Chapters 1 and 4 of the PA (U.S. EPA, 2014c, sections 1.3, 4.6), and is summarized below.

As an initial matter, the PA notes that controlled human exposure studies provide the most certain evidence indicating the occurrence of health effects in humans following exposures to specific O_3 concentrations. Consistent with this, CASAC concluded that "the scientific evidence supporting the finding that the current standard is inadequate to protect public health is strongest based on the controlled human exposure studies of respiratory effects" (Frey, 2014c, p. 5). As discussed above and in section 3.1.2.1 of the PA (U.S. EPA, 2014c), controlled human exposure studies have reported a variety of respiratory effects in healthy adults following exposures to O_3 concentrations of 60, 72,[125] or 80 ppb, and higher.

Given the evidence for respiratory effects from controlled human exposure studies, the PA considers the extent to which standards with revised levels would be estimated to protect at-risk populations against exposures of concern to O_3 concentrations at or above the health benchmark concentrations of 60, 70, and 80 ppb (i.e., based on HREA estimates of one or more and two or more exposures of concern). In doing so, the PA notes the CASAC conclusion that (Frey, 2014c, p. 6):

> The 80 ppb-8hr benchmark level represents an exposure level for which there is substantial clinical evidence demonstrating a range of ozone-related effects including lung inflammation and airway responsiveness in healthy individuals. The 70 ppb-8hr benchmark level reflects the fact that in healthy subjects,

[125] As noted above, for the 70 ppb exposure concentration Schelegle et al. (2009) reported that the actual 6.6-hour mean exposure concentration was 72 ppb.

> decreases in lung function and respiratory symptoms occur at concentrations as low as 72 ppb and that these effects almost certainly occur in some people, including asthmatics and others with low lung function who are less tolerant of such effects, at levels of 70 ppb and below. The 60 ppb-8hr benchmark level represents the lowest exposure level at which ozone-related effects have been observed in clinical studies of healthy individuals.

The PA also notes that, due to individual variability in responsiveness, only a subset of people who experience exposures at or above the three benchmark concentrations can be expected to experience associated health effects, and that available data are not sufficient to quantify that subset of people for most of the endpoints that have been evaluated in controlled human exposure studies (i.e., with the exception of FEV_1 decrements). The PA views the health effects evidence as a continuum with greater confidence and less uncertainty about the occurrence of adverse health effects at higher O_3 exposure concentrations, and less confidence and greater uncertainty as one considers lower exposure concentrations (U.S. EPA, 2014c, section 3.2.2, p. 3-101).

While there is greater uncertainty regarding the occurrence of adverse health effects at lower concentrations, the PA also notes that the controlled human exposure studies that provided the basis for benchmark concentrations have not evaluated responses in populations at the greatest risk from exposures to O_3 (e.g., children, people with asthma). Compared to the healthy people included in most controlled human exposure studies, members of at-risk populations and lifestages are at greater risk of experiencing adverse effects. Thus, the effects reported in healthy adults at each of the benchmark concentrations may underestimate effects in these at-risk groups. In considering the health evidence within the context of drawing conclusions on alternative standard levels, the PA balances concerns about the potential for adverse health effects, especially in at-risk populations, with the increasing uncertainty regarding the likelihood of such effects following exposures to lower O_3 concentrations.

With respect to the lung function decrements that have been evaluated in controlled human exposure studies, the PA considers the extent to which standards with revised levels would be estimated to protect healthy and at-risk populations against O_3-induced lung function decrements large enough to be adverse in some people (based on quantitative risk estimates in the HREA). As discussed in section 3.1.3 of the PA (U.S. EPA, 2014c) and section II.B.3 above, although some experts would judge single occurrences of moderate responses to be a nuisance, especially for healthy individuals, a more general consensus view of the adversity of moderate lung function decrements emerges as the frequency of occurrence increases. Repeated occurrences of moderate responses, even in otherwise healthy individuals, may be considered to be adverse, since they could well set the stage for more serious illness (73 FR 16448). In reaching conclusions on alternative standard levels, the PA considers the extent to which standards with revised levels would be estimated to protect healthy and at-risk populations against one or more, and two or more, moderate (i.e., FEV_1 decrements ≥ 10% and ≥ 15%) and large (i.e., FEV_1 decrements ≥ 20%) lung function decrements.

In evaluating the epidemiologic evidence within the context of drawing conclusions on alternative standard levels, the PA considers the extent to which available studies have reported associations with emergency department visits, hospital admissions, and/or mortality in locations that would likely have met alternative standards with levels below 75 ppb. In evaluating the epidemiologic evidence in this way, the PA considers both multicity and single-city studies, recognizing the strengths and limitations of each. In particular, while single-city studies are more limited than multicity studies in terms of statistical power and geographic coverage, conclusions linking air quality in a specific area with health effect associations in that same area can be made

with greater certainty for single-city studies (i.e., compared to multicity studies reporting only multicity effect estimates).

The PA also considers the epidemiologic evidence within the context of epidemiology-based risk estimates. Compared to the weight given to HREA estimates of exposures of concern and lung function risks, and the weight given to the evidence, the PA places relatively less weight on epidemiologic-based risk estimates. In doing so, the PA notes that the overall conclusions from the HREA likewise reflect less confidence in estimates of epidemiologic-based risks than in estimates of exposures and lung function risks. The determination to attach less weight to the epidemiologic-based estimates reflects the uncertainties associated with mortality and morbidity risk estimates, including the heterogeneity in effect estimates between locations, the potential for exposure measurement errors, and uncertainty in the interpretation of the shape of concentration-response functions at lower O_3 concentrations (U.S. EPA, 2014a, section 9.6). The HREA also concludes that lower confidence should be placed in the results of the assessment of respiratory mortality risks associated with long-term O_3 exposures, primarily because that analysis is based on only one study (even though that study is well-designed) and because of the uncertainty in that study about the existence and level of a potential threshold in the concentration-response function (U.S. EPA, 2014a, section 9.6).

In considering the epidemiology-based risk estimates, the PA focuses on the extent to which potential alternative O_3 standards with levels below 75 ppb are estimated to reduce the risk of O_3-associated mortality.[126] As discussed for the current standard (II.D.2.c), the PA considers estimates of total risk (i.e., based on the full distributions of ambient O_3

[126] Differences in estimated respiratory morbidity risks between alternative standard levels are similar to the differences estimated for total mortality associated with short-term O_3 concentrations.

concentrations) and estimates of risk associated with O_3 concentrations in the upper portions of ambient distributions.

b. PA conclusions on alternative O_3 standard levels

Using the approach discussed above to consider the scientific evidence and exposure/risk information, CASAC advice (II.E.4.c, below), and public comments, the PA reaches the conclusion that it is appropriate for the Administrator to consider alternative primary O_3 standard levels from 70 to 60 ppb. The basis for this conclusion is discussed in detail in sections 4.4.1 and 4.4.2 of the PA (U.S. EPA, 2014c), and is summarized below.

With regard to controlled human exposure studies, the PA considers the lowest O_3 exposure concentrations at which various effects have been evaluated and statistically significant effects reported. The PA also considers the potential for reported effects to be adverse, including in at-risk populations and lifestages. As discussed in section 3.1.2.1 of the PA (U.S. EPA, 2014c), controlled human exposure studies provide evidence of respiratory symptoms combined with lung function decrements (an adverse response based on ATS criteria) in healthy adults following 6.6 hour exposures to O_3 concentrations as low as 72 ppb, and evidence of potentially adverse lung function decrements and airway inflammation following 6.6 hour exposures to O_3 concentrations as low as 60 ppb.

Although some studies show that respiratory symptoms also develop during exposures to 60 ppb O_3, the increase in symptoms has not been reported to reach statistical significance by the end of the 6.6 hour exposure period (Adams, 2006; Schelegle et al., 2009). Thus, while significant increases in respiratory symptoms combined with lung function decrements have not been reported following exposures to 60 ppb O_3, this combination of effects is likely to occur to some degree in healthy adults with 6.6-hour exposures to concentrations below 72 ppb, and also

are more likely to occur with longer (i.e., 8-hour) exposures.[127] In addition, pulmonary inflammation, particularly if experienced repeatedly, provides a mechanism by which O_3 may cause other more serious respiratory morbidity effects (e.g., asthma exacerbations) and possibly extrapulmonary effects. As discussed in section 3.1.2.1 of the PA (U.S. EPA, 2014c), the physiological effects reported in controlled human exposure studies down to 60 ppb O_3 have been linked to aggravation of asthma and increased susceptibility to respiratory infection, potentially leading to increased medication use, increased school and work absences, increased visits to doctors' offices and emergency departments, and increased hospital admissions.

With regard to the lowest exposure concentration shown to cause respiratory effects (i.e., 60 ppb),[128] the PA notes that most controlled human exposure studies have not evaluated O_3 concentrations below 60 ppb. Therefore, 60 ppb does not necessarily reflect an exposure concentration below which effects such as lung function decrements and airway inflammation no longer occur. This is particularly the case given that controlled human exposure studies were conducted in healthy adults, while people with asthma, including asthmatic children, are likely to be more sensitive to O_3-induced respiratory effects.

With regard to other O_3-induced effects, the PA notes that AHR and impaired lung host defense capabilities have been reported in healthy adults engaged in moderate exertion following exposures to O_3 concentrations as low as 80 ppb, the lowest concentration evaluated for these

---

[127] In addition, CASAC observed that, "adverse health effects in young healthy adults occur with exposures to 72 ppb of ozone for 6.6 hours" and that "[i]t is the judgment of CASAC that if subjects had been exposed to ozone using the 8-hour averaging period used in the standard, adverse effects could have occurred at [a] lower concentration. Further, in our judgment, the level at which adverse effects might be observed would likely be lower for more sensitive subgroups, such as those with asthma" (Frey, 2014c, p. 5).

[128] As discussed above (II.B.2), prolonged 6.6 exposure to 40 ppb O_3 has been shown to result in a small decrease in group mean FEV_1 that is not statistically different from responses following exposure to filtered air (Adams, 2002; Adams, 2006).

effects. As discussed in section 3.1.2.1 of the PA (U.S. EPA, 2014c), these physiological effects have been linked to aggravation of asthma and increased susceptibility to respiratory infection, potentially leading to increased medication use, increased school and work absences, increased visits to doctors' offices and emergency departments, and increased hospital admissions. These are all indicators of adverse O_3-related morbidity effects, which are consistent with, and provide plausibility for, the adverse morbidity effects and mortality effects observed in epidemiologic studies.

Based on consideration of the above evidence, the PA concludes that available controlled human exposure studies support considering alternative O_3 standard levels from 70 to 60 ppb in the current review. In reaching this conclusion, the PA notes that 70 ppb is just below the O_3 exposure concentration reported to result in lung function decrements and respiratory symptoms in healthy adults (i.e., 72 ppb), a combination of effects that meet ATS criteria for an adverse response. In addition, while 70 ppb is well below the 80 ppb exposure concentration shown to cause potentially adverse respiratory effects such as AHR and impaired host-defense capabilities, these effects have not been evaluated at exposure concentrations below 80 ppb and there is no reason to believe that 80 ppb represents a threshold for such effects. In addition, potentially adverse lung function decrements and pulmonary inflammation have been demonstrated to occur in healthy adults at 60 ppb. Thus, 60 ppb is a short-term exposure concentration that may be reasonably concluded to elicit adverse effects in at-risk groups.

The PA further notes that the range of alternative levels from 70 to 60 ppb is supported by evidence from epidemiologic studies and by exposure and risk estimates from the HREA. This evidence and exposure/risk information indicate that a level from anywhere in the range of 70 to 60 ppb would be expected to result in important public health improvements over the

current standard. In particular, compared to the current standard a revised standard with a level from 70 to 60 ppb would be expected to (1) more effectively maintain short- and long-term O_3 concentrations below those present in the epidemiologic studies that reported significant O_3 health effect associations in locations likely to have met the current standard; (2) reduce the occurrence of exposures of concern to O_3 concentrations that result in respiratory effects in healthy adults (at or above 60, 70, and 80 ppb); (3) reduce the occurrence of moderate-to-large O_3-induced lung function decrements; and (4) reduce the risk of O_3-associated mortality and morbidity, particularly the risk associated with the upper portions of the distributions of ambient O_3 concentrations. The PA also notes that the range of levels from 70 to 60 ppb corresponds to the range of levels recommended for consideration by CASAC, based on the available evidence and information (Frey, 2014a; Frey, 2014c).

In reaching a conclusion on whether it is appropriate to consider alternative standard levels below 60 ppb, the PA notes the following:

(1) While controlled human exposure studies provide evidence for O_3-induced respiratory effects following exposures to O_3 concentrations as low as 60 ppb, they do not provide evidence for adverse effects following exposures to lower concentrations. On this issue, CASAC concurred that 60 ppb O_3 is an appropriate and justifiable scientifically based lower bound for a revised primary standard, based upon findings of "adverse effects, including clinically significant lung function decrements and airway inflammation, after exposures to 60 ppb ozone in healthy adults with moderate exertion (Adams, 2006; Schelegle et al., 2009; Brown et al., 2008; Kim et al., 2011), with limited evidence of adverse effects below 60 ppb" (Frey, 2014c, p. 7).

(2) Based on the HREA results, meeting an O_3 standard with a level of 60 ppb would be expected to almost eliminate exposures of concern to O_3 concentrations at or above 60 ppb. To the extent lower exposure concentrations may result in adverse health effects in some people, a standard level of 60 ppb would be expected to also reduce exposures to O_3 concentrations below 60 ppb.

(3) U.S. and Canadian epidemiologic studies have not reported O_3 health effect associations based primarily on study locations likely to have met a standard with a level of 60 ppb.

(4) In all of the urban study areas evaluated, a standard with a level of 60 ppb would be expected to maintain long-term O_3 concentrations below those where a key study indicates the most confidence in a linear concentration-response relationship with respiratory mortality.

Given all of the above considerations the PA concludes that, compared to standards with levels from 70 to 60 ppb, the extent to which standards with levels below 60 ppb could result in further public health improvements becomes notably less certain. Therefore, the PA concludes that it is not appropriate in this review to consider standard levels below 60 ppb.

The following sections summarize the PA's consideration of the scientific evidence and exposure/risk information specifically related to potential alternative O_3 standards with levels from the upper (70 ppb) (II.E.4.c.i), middle (65 ppb) (II.E.4.c.ii), and lower (60 ppb) (II.E.4.c.iii) portions of the range of 70 to 60 ppb. Key exposure/risk information considered in the PA is summarized in Tables 4 and 5, below (from U.S. EPA, 2014c, Tables 4-4 and 4-5).

Table 4. Summary of Estimated Exposures of Concern for Potential Alternative O_3 Standard Levels of 70, 65, and 60 ppb in Urban Case Study Areas[129]

Benchmark Level	Alternative Standard Level (ppb)	Average % Children Exposed[130]	Number of Children (5 to 18 years) [Number of Asthmatic Children][131, 132]	Average % Reduction from Current Standard[133]	% Children - Worst Year and Worst Area
One or more exposures of concern per season					
≥ 70 ppb	70	0.1-1.2	94,000 [10,000]	73	3.2
	65	0-0.2	14,000 [2,000]	95	0.5
	60	0[134]	1,400 [200][135]	100	0.1
≥ 60 ppb	70	3.3-10.2	1,176,000 [126,000]	46	18.9
	65	0-4.2	392,000 [42,000]	80	9.5
	60	0-1.2	70,000 [8,000]	96	2.2
Two or more exposures of concern per season					
≥ 70 ppb	70	0-0.1	5,400 [600]	95	0.4
	65	0	300 [100]	100	0
	60	0	0 [0]	100	0
≥ 60 ppb	70	0.5-3.5	320,000 [35,000]	61	9.2
	65	0-0.8	67,000 [7,500]	92	2.8
	60	0-0.2	5,100 [700]	100	0.3

[129] All alternative standard levels evaluated in the HREA were effective at limiting exposures of concern at or above 80 ppb (U.S. EPA, 2014c, Figures 4-1 to 4-4). Therefore, Table 4 focuses on exposures of concern at or above the 70 and 60 ppb benchmark concentrations.

[130] Estimates for each urban case study area were averaged for the years evaluated in the HREA (2006 to 2010). Ranges reflect the ranges across urban study areas.

[131] Numbers of children exposed in each urban case study area were averaged over the years 2006 to 2010. These averages were then summed across urban study areas. Numbers are rounded to nearest thousand unless otherwise indicated.

[132] As noted in section II.C.3.a.ii, the responsiveness of asthmatics to O_3 exposures could depend on factors that have not been well-evaluated such as asthma severity, the effectiveness of asthma control, or the prevalence of medication use.

[133] Percent reductions in each urban study area were calculated and averaged across areas.

[134] Estimates smaller than 0.05% were rounded to zero.

[135] As discussed in section 4.3.3 of the HREA (U.S. EPA, 2014a), the model-based air quality adjustment approach used to estimate risks associated with the current and alternative standards was unable to estimate the distribution of ambient O_3 concentrations in New York City upon just meeting an alternative standard with a level of 60 ppb. Therefore, for the 60 ppb standard level the numbers of children and asthmatic children reflect all of the urban study areas except New York.

Table 5. Summary of Estimated Lung Function Decrements for Potential Alternative O_3 Standard Levels of 70, 65, and 60 ppb in Urban Case Study Areas

Lung Function Decrement	Alternative Standard Level	Average % Children[136]	Number of Children (5 to 18 years) [Number of Asthmatic Children][137, 138]	Average % Reduction from Current Standard	% Children Worst Year and Area
One or more decrements per season					
≥ 10%	70	11-17	2,527,000 [261,000]	15	20
	65	3-15	1,896,000 [191,000]	31	18
	60	5-11	1,404,000 [139,000][139]	45	13
≥ 15%	70	2-4	562,000 [58,000]	26	5
	65	0-3	356,000 [36,000]	50	4
	60	1-2	225,000 [22,000]	67	3
≥ 20%	70	1-2	189,000 [20,000]	32	2.1
	65	0-1	106,000 [11,000]	59	1.4
	60	0-1	57,000 [6,000]	77	0.7
Two or more decrements per season					
≥ 10%	70	5.5-11	1,414,000 [145,000]	17	13
	65	1.3-8.8	1,023,000 [102,000]	37	11
	60	2.1-6.4	741,000 [73,000]	51	7.3
≥ 15%	70	0.9-2.4	276,000 [28,000]	29	3.1
	65	0.1-1.8	168,000 [17,000]	54	2.3
	60	0.2-1.0	101,000 [10,000]	71	1.4
≥ 20%	70	0.3-0.8	81,000 [8,000]	34	1.1
	65	0-0.5	43,000 [4,000]	66	0.8
	60	0-0.2	21,000 [2,000]	83	0.4

[136] Estimates in each urban case study area were averaged for the years evaluated in the HREA (2006 to 2010). Ranges reflect the ranges across urban study areas.

[137] Numbers of children estimated to experience decrements in each urban case study area were averaged over 2006 to 2010. These averages were then summed across urban study areas. Numbers are rounded to nearest thousand unless otherwise indicated.

[138] As noted in section II.C.3.a.ii, the responsiveness of asthmatics to O_3 exposures could depend on factors that have not been well-evaluated such as asthma severity, the effectiveness of asthma control, or the prevalence of medication use.

[139] As discussed in section 4.3.3 of the HREA (U.S. EPA, 2014a), the model-based air quality adjustment approach used to estimate risks associated with the current and alternative standards was unable to estimate the distribution of ambient O_3 concentrations in New York City upon just meeting an alternative standard with a level of 60 ppb. Therefore, for the 60 ppb standard level the numbers of children and asthmatic children reflect all of the urban study areas except New York.

i. PA consideration of an O_3 standard level of 70 ppb

The PA notes that a level of 70 ppb is below the lowest O_3 exposure concentration that has been reported to elicit a range of respiratory effects that includes AHR and decreased lung host defense, in addition to lung function decrements, airway inflammation, and respiratory symptoms (i.e., 80 ppb). A level of 70 ppb is also below the lowest exposure concentration at which the combined occurrence of respiratory symptoms and lung function decrements have been reported (i.e., 72 ppb), a combination judged adverse by the ATS (U.S. EPA, 2014c, section 3.1.3). A level of 70 ppb is above the lowest exposure concentration demonstrated to result in lung function decrements large enough to be judged an abnormal response by ATS and above the lowest exposure concentration demonstrated to result in pulmonary inflammation (i.e., 60 ppb).

Compared to the current standard, the HREA estimates that a revised O_3 standard with a level of 70 ppb would reduce exposures of concern to O_3 concentrations of 60, 70, and 80 ppb in urban study areas, with such a standard level estimated to be most effective at limiting exposures at or above the higher health benchmark concentrations and at limiting multiple occurrences of such exposures. On average over the years 2006 to 2010, for a standard with a level of 70 ppb, up to about 1% of children (i.e., ages 5 to 18) are estimated to experience exposures of concern at or above 70 ppb (73% reduction, compared to current standard), and far less than 1% are estimated to experience two or more such exposures (95% reduction, compared to current standard). In the worst-case location and year (i.e., location and year with the largest exposure estimate), about 3% of children are estimated to experience one or more exposures of concern at or above 70 ppb, and less than 1% are estimated to experience two or more. Far less than 1% of

children are estimated to experience exposures of concern at or above the 80 ppb benchmark concentration, even in the worst-case year (Table 4, above).[140]

As noted above, CASAC advised the EPA that 60 ppb is an appropriate exposure of concern with respect to adverse effects on people with asthma, including children (Frey, 2014c, pp. 6 and 8). For an O_3 standard with a level of 70 ppb, about 3 to 10% of children, including asthmatic children, are estimated to experience one or more exposures of concern at or above 60 ppb in a single O_3 season. Compared to the current standard, this reflects about a 46% reduction, on average across the urban study areas. About 1% to 4% of children are estimated to experience two or more exposures of concern at or above 60 ppb (approximately 60% reduction, compared to current standard). In the worst-case location and year, for a standard set at 70 ppb, about 19% of children are estimated to experience one or more exposures of concern at or above 60 ppb, and 9% are estimated to experience two or more such exposures (Table 4, above).

Compared to the current standard, the HREA estimates that a revised O_3 standard with a level of 70 ppb would also reduce O_3-induced lung function decrements in children. A level of 70 ppb is estimated to be most effective at limiting the occurrences of moderate and large lung function decrements (i.e., FEV_1 decrements ≥ 15% and ≥ 20%, respectively), and at limiting multiple occurrences of O_3-induced decrements. On average over the years 2006 to 2010, for a standard with a level of 70 ppb, about 2 to 4% of children in the urban study areas are estimated to experience one or more moderate O_3-induced lung function decrements (i.e., FEV_1 decrement ≥ 15%), which would be of concern for healthy people, and about 1 to 2.5% of children are

[140] As noted above, due to interindividual variability, children (or adults) exposed at these levels will not necessarily experience health effects; the information available for some health effects is not sufficient to quantify the numbers of children in the urban study areas who might experience these effects.

estimated to experience two or more such decrements (approximately 30% reduction, compared to the current standard). In the worst-case location and year, up to 5% of children are estimated to experience one or more O_3-induced lung function decrements ≥ 15%, and up to 3% are estimated to experience two or more such decrements. For a standard set at 70 ppb, about 2% or fewer children are estimated to experience large O_3-induced lung function decrements (i.e., FEV_1 decrement ≥ 20%), and about 1% or fewer children are estimated to experience two or more such decrements, even in the worst-case years and locations (Table 5, above).

On average over the years 2006 to 2010, for an O_3 standard set at 70 ppb, about 11 to 17% of children in the urban study areas are estimated to experience one or more moderate O_3-induced lung function decrements (i.e., FEV_1 decrement ≥ 10%), which could be adverse for people with lung disease. This reflects an average reduction of about 15%, compared to the current standard. About 6 to 11% of children are estimated to experience two or more such decrements (17% reduction, compared to current standard). In the worst-case location and year, for a standard set at 70 ppb, about 20% of children in the urban study areas are estimated to experience one or more O_3-induced lung function decrements ≥ 10%, and 13% are estimated to experience two or more such decrements (Table 5, above).

Compared to the current standard, a revised standard with a level of 70 ppb would also more effectively maintain short-term ambient O_3 concentrations below those present in the epidemiologic studies that reported significant O_3 health effect associations in locations likely to have met the current standard. In particular, the single-city study by Mar and Koenig (2009) reported positive and statistically significant associations with respiratory emergency department visits in children and adults in a location that likely would have met the current O_3 standard over the entire study period but violated a revised standard with a level of 70 ppb or below. None of

the single-city studies evaluated in section 4.4.1 of the PA (U.S. EPA, 2014c) provide evidence for O_3 health effect associations in locations meeting a standard with a level of 70 ppb or below. While this analysis does not provide information on the extent to which the reported O_3-associated emergency department visits would persist upon meeting an O_3 standard with a level of 70 ppb, or on the extent to which standard levels below 70 ppb could further reduce the incidence of such emergency department visits,[141] it suggests that a revised O_3 standard with a level at or below 70 ppb would require reductions in the ambient O_3 concentrations that provided the basis for the health effect associations reported by Mar and Koenig (2009).

As discussed above, compared to single-city studies, there is greater uncertainty in linking air quality concentrations from individual study cities to multicity effect estimates. With regard to the multicity studies in this review, the PA notes that Dales et al. (2006) reported significant associations with respiratory hospital admissions based on air quality in 11 Canadian cities, most of which would likely have met the current standard over the entire study period, but violated a revised standard with a level of 70 ppb or below over at least part of that period (Table 4-1). This analysis suggests that although the current standard would allow the ambient O_3 concentrations in most of the study locations that provided the basis for the association with hospital admissions, a revised O_3 standard with a level at or below 70 ppb would require reductions in those ambient O_3 concentrations. As with the study by Mar and Koenig (2009), this analysis does not provide information on the extent to which the reported O_3-associated hospital admissions would persist upon meeting an O_3 standard with a level of 70 ppb, or on the extent to

[141] Put another way, one cannot infer from this analysis the extent to which effects would occur at O_3 concentrations below those observed in the study.

which standard levels below 70 ppb could further reduce the incidence of such hospital admissions.[142]

With regard to long-term O_3 concentrations, the PA evaluates the long-term O_3 metrics reported to be associated with mortality or morbidity in recent epidemiologic studies (e.g., seasonal averages of 1-hour or 8-hour daily max concentrations). Compared to the current standard, a revised standard with a level of 70 ppb would be expected to reduce the risk of respiratory mortality associated with long-term O_3 concentrations, based on information from the study by Jerrett et al. (2009), though the PA notes the HREA conclusion, discussed above, that lower confidence should be placed in respiratory mortality risk estimates based on this study (U.S. EPA, 2014a, section 9.6). In addition, a standard with a level of 70 ppb would be expected to more effectively maintain long-term O_3 concentrations below those where the study by Jerrett et al. (2009) indicates the most confidence in the reported association with respiratory mortality.[143] Specifically, air quality analyses indicate this to be the case in 9 out of the 12 urban study areas for a level of 70 ppb, compared to 6 out of 12 areas for the current standard. Finally, a revised standard with a level of 70 ppb would be expected to reduce long-term O_3 concentrations based on the types of metrics that have been reported in recent epidemiologic

[142] In addition, for the other multicity studies identified in Table 4-1 of the PA (Cakmak et al., 2006; Stieb et al., 2009; Katsouyanni et al., 2009), and for the study by Bell et al. (2006) (for the 30 ppb cut point) (Table 4-2 of the PA), the majority of study locations would likely have met a standard with a level of 70 ppb (U.S. EPA, 2014c).

[143] As discussed in section 3.1.4.3 of the PA (U.S. EPA, 2014c), the study by Jerrett et al. (2009) suggests notably decreased confidence in the reported linear concentration-response function for long-term O_3 concentrations in the first quartile (i.e., at or below about 53 ppb), given the widening in confidence intervals for lower concentrations; the fact that most study cities contributing to the linear function had O_3 concentrations in the highest three quartiles, accounting for approximately 72% of the respiratory deaths in the cohort (based on Table 2 in the published study); and the limited evidence presented in the published study for a threshold at or near 56 ppb.

studies to be associated with respiratory morbidity (i.e., seasonal averages of daily maximum 8-hour concentrations).

In further considering the potential implications of epidemiology studies for alternative standard levels, the PA notes estimates of total mortality associated with short-term O_3 concentrations.[144] As discussed above, the PA considers estimates of total risk (i.e., based on the full distributions of ambient O_3 concentrations) and estimates of risk associated with O_3 concentrations in the upper portions of ambient distributions. With regard to total risk the PA notes that, when summed across urban study areas, a standard with a level of 70 ppb is estimated to reduce the number of deaths associated with short-term O_3 concentrations by about 4% (2007) and 2% (2009), compared to the current standard.[145] Based on a national modeling analysis, the majority of the U.S. population would be expected to experience reductions in such risks upon reducing precursor emissions.

Compared to the total risk estimates noted above, an O_3 standard with a level of 70 ppb is estimated to be more effective at reducing the number of deaths associated with short-term O_3 concentrations at the upper ends of ambient distributions. Specifically, for area-wide O_3 concentrations at or above 40 ppb, a standard with a level of 70 ppb is estimated to reduce the number of deaths associated with short-term O_3 concentrations by about 10% compared to the current standard. In addition, for area-wide concentrations at or above 60 ppb, a standard with a

[144] As discussed above, compared to the weight given to the evidence and to HREA estimates of exposures of concern and lung function risks, the PA places relatively less weight on epidemiologic-based risk estimates.

[145] A standard with a level of 70 ppb is also estimated to reduce respiratory mortality associated with long-term O_3 concentrations in urban study areas. However, given uncertainties associated with these risk estimates, as discussed above, the PA gives them limited weight.

level of 70 ppb is estimated to reduce O_3-associated deaths by about 50% to 70% (U.S. EPA, 2014c, Figure 4-13).

The PA noted that in providing the advice that 70 ppb is an appropriate upper bound for consideration, CASAC advised that a level of 70 ppb would provide little margin of safety for protection of public health, particularly for sensitive subpopulations (Frey, 2014c, p. 8). In particular, CASAC stated that:

> At 70 ppb, there is substantial scientific certainty of a variety of adverse effects, including decrease in lung function, increase in respiratory symptoms, and increase in airway inflammation. Although a level of 70 ppb is more protective of public health than the current standard, it may not meet the statutory requirement to protect public health with an adequate margin of safety (Frey, 2014c, p.8).[146]

However, the committee also acknowledged that "the choice of a level within the range recommended based on scientific evidence [i.e., 70 to 60 ppb] is a policy judgment under the statutory mandate of the Clean Air Act" (Frey, 2014c, pp. ii and 8).

In summary, compared to the current standard, the PA concludes that a revised O_3 standard with a level of 70 ppb would be expected to (1) reduce the occurrence of exposures of concern to O_3 concentrations that result in respiratory effects in healthy adults (at or above 60 and 70 ppb) by about 45 to 95%, almost eliminating the occurrence of multiple exposures at or above 70 ppb; (2) reduce the occurrence of moderate-to-large O_3-induced lung function decrements (FEV_1 decrements $\geq$ 10, 15, 20%) by about 15 to 35%, most effectively limiting the occurrence of multiple decrements and decrements $\geq$ 15, 20%; (3) more effectively maintain short- and long-term O_3 concentrations below those present in the epidemiologic studies that reported significant O_3 health effect associations in locations likely to have met the current

[146] Also see Frey (2014c, p. ii).

standard;[147] and (4) reduce the risk of O_3-associated mortality and morbidity, particularly the risk associated with the upper portions of the distributions of ambient O_3 concentrations.

ii. PA consideration of an O_3 standard level of 65 ppb

The PA also considers a standard with a level of 65 ppb. A level of 65 ppb is well below 80 ppb, an O_3 exposure concentration that has been reported to elicit a range of respiratory effects that includes airway hyperresponsiveness and decreased lung host defense, in addition to lung function decrements, airway inflammation, and respiratory symptoms. A standard level of 65 ppb is also below the lowest exposure concentration at which the combined occurrence of respiratory symptoms and lung function decrements has been reported (i.e., 72 ppb), a combination judged adverse by the ATS (U.S. EPA, 2014c, section 3.1.3). A level of 65 ppb is above the lowest exposure concentration demonstrated to result in lung function decrements large enough to be judged an abnormal response by ATS, where statistically significant changes in group mean responses would be judged to be adverse by ATS, and which the CASAC has indicated could be adverse in people with lung disease (i.e., 60 ppb). A level of 65 ppb is also above the lowest exposure concentration at which pulmonary inflammation has been reported in healthy adults (i.e., 60 ppb).

Compared to the current standard and a revised standard with a level of 70 ppb, the HREA estimates that a standard with a level of 65 ppb would reduce exposures of concern to the range of O_3 benchmark concentrations analyzed (i.e., 60, 70, and 80 ppb). The HREA estimates that meeting a standard with a level of 65 ppb would eliminate exposures of concern at or above 80 ppb in the urban study areas. Such a standard is estimated to allow far less than 1% of

[147] Epidemiologic studies also provide some evidence for O_3 health effect associations in locations likely to have met a standard with a level of 70 ppb, as discussed below for lower standard levels.

children in the urban study areas to experience one or more exposures of concern at or above the 70 ppb benchmark level, even in the worst-case years and locations, and is estimated to eliminate the occurrence of two or more exposures at or above 70 ppb (Table 4, above).

In addition, for a standard with a level of 65 ppb, between 0 and about 4% of children (including asthmatic children) in urban study areas are estimated to experience exposures of concern at or above 60 ppb, which CASAC has indicated is an appropriate exposure of concern for people with asthma, including children. This reflects an 80% reduction (on average across areas), relative to the current standard. Less than 1% of children are estimated to experience two or more exposures of concern at or above 60 ppb (> 90% reduction, compared to current standard). In the worst-case location and year, about 10% of children are estimated to experience one or more exposures of concern at or above 60 ppb, with about 3% estimated to experience two or more such exposures (Table 4, above).

Compared to the current standard and a revised standard with a level of 70 ppb, the HREA estimates that a standard with a level of 65 ppb would also further reduce the occurrence of O_3-induced lung function decrements. For a level of 65 ppb, about 4% of children, or less, are estimated to experience moderate O_3-induced FEV_1 decrements ≥ 15% (50% reduction, compared to current standard), even considering the worst-case location and year. About 2% of children, or less, are estimated to experience two or more such decrements. Only about 1% of children, or less, are estimated to experience large O_3-induced lung function decrements (i.e., FEV_1 decrement ≥ 20%), even in the worst-case year and location.

In addition, for a standard with a level of 65 ppb, about 3 to 15% of children are estimated to experience one or more moderate O_3-induced lung function decrements (i.e., FEV_1 decrement ≥ 10%), which CASAC has indicated could be adverse for people with lung disease.

This reflects an average reduction of about 30%, relative to the current standard. About 1 to 9% of children in the urban study areas are estimated to experience two or more such decrements (37% reduction, compared to current standard). In the worst-case location and year, for a standard set at 65 ppb, up to about 18% of these children are estimated to experience one or more moderate O_3-induced lung function decrements ≥ 10%, and up to 11% are estimated to experience two or more such decrements.

With regard to O_3 epidemiologic studies, the PA notes that a revised standard with a level of 65 ppb would be expected to maintain short-term ambient O_3 concentrations below those present in some of the study locations that provided the basis for reported O_3 health effect associations and that were likely to have met a revised standard with a level of 70 ppb. In particular, Katsouyanni et al. (2009) reported statistically significant associations with mortality based on air quality in 12 Canadian cities, most of which would likely have met a standard with a level of 70 ppb over the entire study period but violated a revised standard with a level of 65 ppb or below over at least part of that period (U.S. EPA, 2014c, Table 4-1). This analysis suggests that although the current standard or a standard with a level of 70 ppb would allow the ambient O_3 concentrations in most of the study locations that provided the basis for the association with mortality in this study, a revised O_3 standard with a level at or below 65 ppb would require reductions in those ambient O_3 concentrations. As discussed above for a level of 70 ppb, this analysis does not provide information on the extent to which O_3-associated mortality would

persist upon meeting an O_3 standard with a level of 65 ppb, or on the extent to which standard levels below 65 ppb could further reduce the incidence of this mortality.[148]

With regard to long-term O_3 concentrations, as for 70 ppb (above) the PA evaluates the long-term O_3 metrics reported to be associated with mortality or morbidity in recent epidemiologic studies (e.g., seasonal averages of 1-hour or 8-hour daily max concentrations). Compared to the current standard or a revised O_3 standard with a level of 70 ppb, a revised standard with a level of 65 ppb would be expected to further reduce the risk of respiratory mortality associated with long-term O_3 concentrations, based on information from the study by Jerrett et al. (2009).[149] In addition, a standard with a level of 65 ppb would be expected to more effectively maintain long-term O_3 concentrations below those where the study by Jerrett et al. (2009) indicates the most confidence in the reported association with respiratory mortality. Specifically, air quality analyses indicate this to be the case in 10 out of the 12 urban study areas for a level of 65 ppb, compared to 6 out of 12 areas for the current standard and 9 out of 12 for a standard with a level of 70 ppb (U.S. EPA, 2014c, Table 4-3). Finally, a revised standard with a level of 65 ppb would be expected to further reduce long-term O_3 concentrations based on the types of metrics that have been reported in recent epidemiologic studies to be associated with respiratory morbidity (i.e., seasonal averages of daily maximum 8-hour concentrations).

[148] For the other multicity studies identified in Table 4-1 of the PA (Cakmak et al., 2006; Stieb et al., 2009; Katsouyanni et al., 2009 (for hospital admissions)), and for the study by Bell et al. (2006) (for the 30 ppb cut point) (Table 4-2 of the PA), the majority of study locations would have met a standard with a level of 65 ppb (U.S. EPA, 2014c).

[149] Though as discussed above, the PA notes the lower confidence placed in these risk results (U.S. EPA, 2014a, section 9.6).

In further considering the potential implications of epidemiology studies for alternative standard levels, the PA notes estimates of total mortality associated with short-term O_3.[150] As discussed above, the PA considers estimates of total risk (i.e., based on the full distributions of ambient O_3 concentrations) and estimates of risk associated with O_3 concentrations in the upper portions of ambient distributions. With regard to total risk the PA notes that, when summed across urban study areas, a standard with a level of 65 ppb is estimated to reduce the number of deaths associated with short-term O_3 exposures by about 13% (2007) and 9% (2009), compared to the current standard.[151] For area-wide concentrations at or above 40 ppb, a standard level of 65 ppb is estimated to reduce O_3-associated deaths by almost 50% compared to the current standard, when summed across urban study areas. For area-wide concentrations at or above 60 ppb, a standard level of 65 ppb is estimated to reduce O_3-associated deaths by more than 80% (U.S. EPA, 2014c, Figure 4-13).

In summarizing CASAC's advice regarding a standard with a level of 65, the PA noted CASAC's conclusion that an alternative standard with a level of 65 ppb would further reduce, though not eliminate, the frequency of lung function decrements $\geq$ 15% and would lead to lower frequency of short-term premature mortality (i.e., compared to a standard with a level of 70 ppb) (Frey, 2014c, p. 8).

In summary, compared to a standard with a level of 70 ppb, the PA concludes that a revised standard with a level of 65 ppb would be expected to further reduce O_3 exposures and

[150] As discussed above, compared to the weight given to the evidence and to HREA estimates of exposures of concern and lung function risks, the PA places relatively less weight on epidemiologic-based risk estimates.

[151] A standard with a level of 65 ppb is also estimated to reduce respiratory mortality associated with long-term O_3 concentrations in urban study areas. However, given uncertainties associated with these risk estimates, as discussed above, we give them limited weight.

health risks. In particular, a standard with a level of 65 ppb is estimated to (1) reduce the occurrence of exposures of concern by about 80 to 100%, compared to the current standard, decreasing exposures at or above 60 ppb and almost eliminating exposures at or above 70 and 80 ppb; (2) reduce the occurrence of FEV_1 decrements $\geq$ 10, 15, and 20% by about 30 to 65%, compared to the current standard; (3) more effectively maintain short- and long-term O_3 concentrations below those present in the epidemiologic studies that reported significant O_3 health effect associations in locations likely to have met the current standard;[152] and (4) further reduce the risk of O_3-associated mortality and morbidity, particularly the risk associated with the upper portion of the distribution of ambient O_3 concentrations.

iii. PA consideration of an O_3 standard level of 60 ppb

The PA also considers a standard with a level of 60 ppb. A level of 60 ppb is well below the O_3 exposure concentration that has been reported to elicit a wide range of potentially adverse respiratory effects in healthy adults (i.e., 80 ppb). A level of 60 ppb is also below the lowest concentration where the combined occurrence of respiratory symptoms and lung function decrements was observed, a combination judged adverse by the ATS (i.e., 72 ppb). A level of 60 ppb corresponds to the lowest exposure concentration demonstrated to result in lung function decrements that are large enough to be judged an abnormal response by ATS, that meet ATS criteria for adversity based on a downward shift in the distribution of FEV1, and that the CASAC indicated could be adverse in people with lung disease. A level of 60 ppb also corresponds to the lowest exposure concentration at which pulmonary inflammation has been reported in a single controlled human exposure study.

[152] Though epidemiologic studies also provide evidence for O_3 health effect associations in locations likely to have met a standard with a level of 65 ppb, as discussed below for a level of 60 ppb.

Based on the HREA analyses of O_3 exposures of concern, a standard with a level of 60 ppb is estimated to eliminate exposures of concern at or above the 70 and 80 ppb benchmark concentrations and to be more effective than the higher standard levels at limiting exposures of concern at or above 60 ppb. On average over the years 2006 to 2010, for a standard with a level of 60 ppb, between 0 and about 1% of children, including asthmatic children, in urban study areas are estimated to experience exposures of concern at or above 60 ppb, which CASAC indicated is an appropriate exposure of concern for asthmatic children. This reflects a 96% reduction (on average across areas), compared to the current standard. Virtually no children are estimated to experience two or more exposures of concern at or above 60 ppb. In the worst-case location and year, about 2% of children are estimated to experience exposures of concern at or above 60 ppb, with far less than 1% estimated to experience two or more such exposures (Table 4, above).

Based on the HREA analyses of O_3-induced lung function decrements, a standard with a level of 60 ppb would be expected to be more effective than a level of 65 or 70 ppb at limiting the occurrence of O_3-induced lung function decrements. For a standard with a level of 60 ppb, about 2% of children, or less, in the urban study areas are estimated to experience one or more moderate O_3-induced FEV_1 decrements ≥ 15% (almost 70% reduction, compared to current standard), and about 1% or less are estimated to experience two or more such decrements (3% in the location and year with the largest estimates). About 1% of children, or less, are estimated to experience large O_3-induced lung function decrements (i.e., FEV_1 decrement ≥ 20%), even in the worst-case locations and year (Table 5, above).

In addition, for a standard with a level of 60 ppb, about 5 to 11% of children in the urban study areas are estimated to experience one or more moderate O_3-induced lung function

decrements that CASAC indicated could be adverse for people with lung disease (i.e., FEV_1 decrements ≥ 10%). This reflects an average reduction of about 45%, compared to the current standard. About 2 to 6% of children in these areas are estimated to experience two or more such decrements (51% reduction, compared to current standard). In the worst-case location and year, for a standard set at 60 ppb, up to about 13% of children are estimated to experience one or more moderate O_3-induced FEV_1 decrements ≥ 10%, and 7% are estimated to experience two or more such decrements (Table 5, above).

With regard to O_3 epidemiologic studies, the PA notes that a revised standard with a level of 60 ppb would be expected to maintain short-term ambient O_3 concentrations below those present in some of the study locations that provided the basis for reported O_3 health effect associations and that were likely to have met a revised standard with a level of 70 or 65 ppb. Specifically, in all of the U.S. and Canadian epidemiologic studies evaluated, the majority of study cities had ambient O_3 concentrations that would likely have violated a standard with a level of 60 ppb. Thus, none of the U.S. and Canadian epidemiologic studies analyzed provide evidence for O_3 health effect associations when the majority of study locations would likely have met a standard with a level of 60 ppb (U.S. EPA, 2014c, Tables 4-1 and 4-2). As discussed above, while this analysis does not provide information on the extent to which the O_3-associated morbidity or mortality would persist upon meeting an O_3 standard with a level of 60 ppb, it suggests that a revised O_3 standard with a level of 60 ppb would require reductions in the ambient O_3 concentrations that provided the basis for those health effect associations.

With regard to long-term O_3 concentrations, compared to the current standard or a revised O_3 standard with a level of 65 or 70 ppb, a revised standard with a level of 60 ppb would be expected to further reduce the risk of respiratory mortality associated with long-term O_3

concentrations, based on information from the study by Jerrett et al. (2009).[153] In addition, a standard with a level of 60 ppb would be expected to more effectively maintain long-term O_3 concentrations below those where the study by Jerrett et al. (2009) indicates the most confidence in the reported association with respiratory mortality. Specifically, air quality analyses indicate this to be the case in all of the urban study areas evaluated at a level of 60 ppb, compared to 6 out of 12 areas for the current standard, 9 out of 12 for a standard with a level of 70 ppb, and 10 out of 12 for a standard with a level of 65 ppb (U.S. EPA, 2014c, Table 4-3). Finally, a revised standard with a level of 60 ppb would be expected to further reduce long-term O_3 concentrations based on the types of metrics that have been reported in recent epidemiologic studies to be associated with respiratory morbidity (i.e., seasonal averages of daily maximum 8-hour concentrations).

In further considering the potential implications of epidemiology studies for alternative standard levels, the PA notes estimates of total mortality associated with short-term O_3 concentrations.[154] As discussed above, the PA considers estimates of total risk (i.e., based on the full distributions of ambient O_3 concentrations) and estimates of risk associated with O_3 concentrations in the upper portions of ambient distributions. With regard to total risk the PA notes that, when summed across urban study areas, a standard with a level of 60 ppb is estimated to reduce the number of deaths associated with short-term O_3 exposures by about 15% (2007)

[153] Though as discussed above, the PA notes the lower confidence we place in these risk results (U.S. EPA, 2014a, section 9.6).
[154] As discussed above, compared to the weight given to the evidence and to HREA estimates of exposures of concern and lung function risks, we place relatively less weight on epidemiologic-based risk estimates.

and 11% (2009), compared to the current standard (U.S. EPA, 2014c, Figure 4-13).[155] For area-wide concentrations at or above 40 ppb, a standard with a level set at 60 ppb is estimated to reduce O_3-associated deaths by almost 60% compared to the current standard. For area-wide concentrations at or above 60 ppb, a standard level of 60 ppb is estimated to reduce O_3-associated deaths by over 95% compared to the current standard.

In summary, compared to a standard with a level of 65 or 70 ppb, the PA concludes that a revised standard with a level of 60 ppb would be expected to further reduce O_3 exposures and health risks. In particular, a standard with a level of 60 ppb is estimated to (1) reduce the occurrence of exposures of concern by about 95 to 100%, compared to the current standard, almost eliminating exposures at or above 60 ppb; (2) reduce the occurrence of FEV_1 decrements $\geq$ 10, 15, and 20% by about 45 to 85%, compared to the current standard; (3) more effectively maintain short- and long-term O_3 concentrations below those present in the epidemiologic studies that reported significant O_3 health effect associations in locations likely to have met the current standard;[156] and (4) further reduce the risk of O_3-associated mortality and morbidity, particularly the risk associated with the upper portion of the distribution of ambient O_3 concentrations.

c. CASAC Advice

The PA recognizes that decisions regarding the weight to place on various types of evidence, exposure/risk information, and associated uncertainties reflect public health policy

[155] A standard with a level of 60 ppb is also estimated to reduce respiratory mortality associated with long-term O_3 concentrations in urban study areas. However, given uncertainties associated with these risk estimates, as discussed above, the PA gives them limited weight.

[156] As discussed above, these studies do not provide information on the extent to which O_3 health effect associations would persist following reductions in ambient O_3 concentrations in order to meet a standard with a level of 60 ppb.

judgments that are ultimately left to the Administrator. To help inform those judgments with regard to the range of alternative primary O_3 standard levels appropriate for consideration, CASAC has provided advice to the Administrator based on their reviews of draft versions of the O_3 ISA, HREA, and PA. This section summarizes the advice provided by CASAC regarding alternative standard levels, as well as the views expressed at the CASAC meetings by public commenters. This section includes CASAC advice from the reconsideration of the 2008 final decision on the level of the standard, as well as CASAC advice received during the current review as it pertains to alternative standards.

Consistent with its advice in 2008, CASAC reiterated during the reconsideration its support for an 8-hour primary O_3 standard with a level ranging from 60 to 70 ppb, combined with the current indicator, averaging time, and form. Specifically, in response to the EPA's solicitation of CASAC advice during the reconsideration, the CASAC letter (Samet, 2010) to the Administrator stated:

> CASAC fully supports EPA's proposed range of 0.060 – 0.070 parts per million (ppm) for the 8-hour primary ozone standard. CASAC considers this range to be justified by the scientific evidence as presented in the Air Quality Criteria for Ozone and Related Photochemical Oxidants (March 2006) and Review of the National Ambient Air Quality Standards for Ozone: Policy Assessment of Scientific and Technical Information, OAQPS Staff Paper (July 2007).

Similarly, in response to the EPA's request for additional advice on the reconsideration in 2011, CASAC reaffirmed its conclusion that "the evidence from controlled human and epidemiologic studies strongly supports the selection of a new primary ozone standard within the 60 – 70 ppb range for an 8-hour averaging time" (Samet, 2011). CASAC further concluded that this range "would provide little margin of safety at its upper end" (Samet, 2011, p. 2).

In the current review of the Second Draft PA, CASAC concurred with staff's conclusions that it is appropriate to consider retaining the current indicator (O_3), averaging time (8-hour

average) and form (3-year average of the 4th highest maximum daily 8-hour average. With regard to level, CASAC stated the following (Frey, 2014c, pp. ii to iii):

> The CASAC further concludes that there is adequate scientific evidence to recommend a range of levels for a revised primary ozone standard from 70 ppb to 60 ppb. The CASAC reached this conclusion based on the scientific evidence from clinical studies, epidemiologic studies, and animal toxicology studies, as summarized in the Integrated Science Assessment (ISA), the findings from the exposure and risk assessments as summarized in the HREA, and the interpretation of the implications of these sources of information as given in the Second Draft PA.
>
> The CASAC acknowledges that the choice of a level within the range recommended based on scientific evidence [i.e., 70 to 60 ppb] is a policy judgment under the statutory mandate of the Clean Air Act. The CASAC advises that, based on the scientific evidence, a level of 70 ppb provides little margin of safety for the protection of public health, particularly for sensitive subpopulations.
>
> Thus, our policy advice is to set the level of the standard lower than 70 ppb within a range down to 60 ppb, taking into account your judgment regarding the desired margin of safety to protect public health, and taking into account that lower levels will provide incrementally greater margins of safety.

The public commenters who expressed the view that the current primary O_3 standard is not adequate (II.D.3) also submitted comments that supported revising the level of the primary O_3 standard. Several of these commenters expressed the view that the level should be revised to the lower end of the range of 70 to 60 ppb, or in some cases to a level below 60 ppb. These commenters often placed a large amount of emphasis on evidence from controlled human exposure studies for respiratory effects following exposures to 60 ppb O_3.

In addition, as discussed above (II.D.3), some public commenters expressed the view that revision of the current standard is not necessary. Consistent with their view that it would not be appropriate to revise the current standard, these commenters did not provide any provisional views on alternative levels below 75 ppb that would be appropriate for consideration.

d. Administrator's proposed conclusions on level

This section discusses the Administrator's proposed conclusions on the level of the primary O_3 standard. In conjunction with her proposed decisions to retain the current indicator, averaging time, and form (II.E.1 to II.E.3, above), the Administrator proposes to revise the level of the primary O_3 standard to within the range of 65 to 70 ppb. In doing so, she is mindful that the selection of a primary O_3 standard that is requisite to protect public health with an adequate margin of safety requires judgments based on an interpretation of the scientific evidence and exposure/risk information that neither overstates nor understates the strengths and limitations of that evidence and information, nor the appropriate inferences to be drawn therefrom.[157] The rationale supporting the Administrator's proposed conclusions on alternative standard levels is discussed below.

The Administrator's proposed conclusions on alternative standard levels build upon her proposed conclusion that the overall body of scientific evidence and exposure/risk information call into question the adequacy of public health protection afforded by the current primary O_3 standard, particularly for at-risk populations and lifestages (II.D.5). These proposed conclusions are based on consideration of the scientific evidence assessed in the ISA (U.S. EPA, 2013a); the results of the exposure and risk assessments in the HREA (U.S. EPA, 2014a); the evidence-based and exposure-/risk-based considerations and conclusions in the PA (U.S. EPA, 2014c); CASAC advice and recommendations, as reflected in CASAC's letters to the Administrator and in public

[157] As discussed above (I.B), in addressing the requirement for an adequate margin of safety the EPA considers such factors as the nature and severity of the health effects, the size of sensitive population(s) at risk, and the kind and degree of the uncertainties that must be addressed. The selection of any particular approach for providing an adequate margin of safety is a policy choice left specifically to the Administrator's judgment. See *Lead Industries Association v. EPA*, 647 F.2d at 1161-62; *State of Mississippi*, 744 F. 3d at 1353.

discussions of drafts of the ISA, HREA, and PA; and public input received during the development of these documents.

In reaching proposed conclusions on alternative levels for the primary O_3 standard, the Administrator considers the extent to which various alternatives would be expected to protect the public, including at-risk populations, against the wide range of adverse health effects that have been linked with short- or long-term O_3 exposures. At-risk populations include people with asthma; children and older adults; people who are active outdoors, including outdoor workers; people with certain genetic variants; and people with reduced intake of certain nutrients.

As was the case for her consideration of the adequacy of the current primary O_3 standard (II.D.5), the Administrator places the greatest weight on the results of controlled human exposure studies and on exposure and risk analyses based on information from these studies. In doing so, she notes that controlled human exposure studies provide the most certain evidence indicating the occurrence of health effects in humans following exposures to specific O_3 concentrations. The effects reported in these studies are due solely to O_3 exposures, and interpretation of study results is not complicated by the presence of co-occurring pollutants or pollutant mixtures (as is the case in epidemiologic studies). She further notes the CASAC judgment that "the scientific evidence supporting the finding that the current standard is inadequate to protect public health is strongest based on the controlled human exposure studies of respiratory effects" (Frey, 2014c, p. 5). Consistent with this emphasis, the HREA conclusions reflect relatively greater confidence in the results of the exposure and risk analyses based on information from controlled human exposure studies (i.e., exposures of concern and risk of lung function decrements) than the results of epidemiology-based risk analyses, given the greater uncertainties in the epidemiology-based risk estimates (U.S. EPA, 2014a, section 9.6). For all of these reasons, the Administrator

has the most confidence in using the information from controlled human exposure studies to reach proposed conclusions on alternative standard levels.

In considering the evidence from controlled human exposure studies, the Administrator first notes that these studies have reported a variety of respiratory effects in healthy adults following exposures to O_3 concentrations of 60,[158] 72,[159] or 80 ppb, and higher. The largest respiratory effects, and the broadest range of effects, have been studied and reported following exposures of healthy adults to 80 ppb O_3 or higher, with most exposure studies conducted at these higher concentrations. Exposures of healthy adults to O_3 concentrations of 80 ppb or higher have been reported to decrease lung function, increase airway inflammation, increase respiratory symptoms, result in airway hyperresponsiveness, and decrease lung host defenses (II.B.2).

The Administrator notes that O_3 exposure concentrations as low as 72 ppb have been shown to both decrease lung function and increase respiratory symptoms (Schelegle et al., 2009), a combination that meets the ATS criteria for an adverse response. In considering effects at 72 ppb, CASAC likewise noted that "the combination of decrements in FEV_1 together with the statistically significant alterations in symptoms in human subjects exposed to 72 ppb ozone meets the American Thoracic Society's definition of an adverse health effect" (Frey, 2014c, p. 5).

With regard to lower exposure concentrations, the Administrator notes that the combination of statistically significant increases in respiratory symptoms and decrements in lung

[158] As discussed above (II.B.2), exposures to 60 ppb O_3 have been evaluated in studies by Adams (2002, 2006), Schelegle et al. (2009), and Kim et al. (2011). In the study by Schelegle, for the 60 ppb target exposure concentration, study authors reported that the actual mean exposure concentration was 63 ppb.

[159] As noted above, for the 70 ppb target exposure concentration, Schelegle et al. (2009) reported that the actual mean exposure concentration was 72 ppb.

function has not been reported. More specifically, she notes that respiratory symptoms have been evaluated following 6.6-hour exposures to average O_3 concentrations of 60 ppb (Adams, 2006; Kim et al., 2011) and 63 ppb (Schelegle et al., 2009) and that none of these studies reported a statistically significant increase in respiratory symptoms, compared to filtered air controls.[160]

Based on this evidence, the Administrator reaches the initial conclusion that the results of controlled human exposure studies strongly support setting the level of a revised O_3 standard no higher than 70 ppb. In reaching this initial conclusion, the Administrator places a large amount of weight on the importance of setting the level of the standard well below 80 ppb, the O_3 exposure concentration shown in healthy adults to result in the broadest range of respiratory effects, and below 72 ppb, the lowest O_3 exposure concentration shown in healthy adults to result in the adverse combination of respiratory symptoms and lung function decrements.

In further considering the potential public health implications of a standard with a level of 70 ppb, the Administrator also considers the extent to which such a standard would be expected to limit population exposures to the broader range of O_3 concentrations reported in controlled human exposure studies to cause respiratory effects. Given the range of effects reported following exposures to 80 ppb O_3, and the evidence for the adverse combination of lung function decrements and respiratory symptoms in healthy adults following exposures as low as 72 ppb, the Administrator concludes that the evidence in this review supports the occurrence of adverse respiratory effects for exposures to O_3 concentrations at or above 72 ppb.

The Administrator has decreasing confidence that adverse effects will occur following exposures to O_3 concentrations below 72 ppb. In particular, compared to O_3 exposure

[160] However, following exposures to 60 ppb O_3, several studies have observed decreases in lung function and one study (Kim et al., 2011) observed an increase in airway inflammation (II.B.2).

concentrations at or above 72 ppb, she has less confidence that adverse effects will occur following exposures to O_3 concentrations as low as 60 ppb. In reaching this conclusion, she notes that, as discussed above, statistically significant increases in respiratory symptoms, combined with lung function decrements, have not been reported following exposures to 60 or 63 ppb O_3, though several studies have evaluated the potential for such effects.

Although she has decreasing confidence in the occurrence of adverse effects following exposures to O_3 concentrations below 72 ppb, the Administrator notes the CASAC judgment that the adverse combination of lung function decrements and respiratory symptoms "almost certainly occur in some people" following exposures to lower concentrations (Frey, 2014c, p. 6). In particular, when commenting on the extent to which the study by Schelegle et al. (2009) suggests the potential for adverse effects following O_3 exposures below 72 ppb, CASAC judged that:

> [I]f subjects had been exposed to ozone using the 8-hour averaging period used in the standard [i.e., rather than the 6.6 hour exposures evaluated in the study], adverse effects could have occurred at lower concentration. Further, in our judgment, the level at which adverse effects might be observed would likely be lower for more sensitive subgroups, such as those with asthma [i.e., compared to the healthy adults evaluated in the study] (Frey, 2014c, p. 5).

Though CASAC did not provide advice as to how far below 72 ppb adverse effects would likely occur, the Administrator agrees that such effects could occur following exposures at least somewhat below 72 ppb.

Based on the evidence and CASAC advice noted above, when considering the extent to which a standard with a level of 70 ppb would be expected to limit population exposures to the broader range of O_3 concentrations shown to cause respiratory effects, the Administrator considers the extent to which such a standard would be expected to limit the occurrence of O_3

exposures of concern at or above 60, 70, and 80 ppb.[161] In doing so, she notes that an O_3 standard established at a particular level can provide protection against a range of exposure concentrations, including concentrations below the standard level. This is because the degree of protection provided by any NAAQS is due to the combination of all of the elements of the standard (i.e., indicator, averaging time, form, level). In the case of the 4th maximum form of the O_3 NAAQS, which the Administrator is proposing to retain in the current review (II.E.3), the large majority of days in areas that meet the standard will have 8-hour O_3 concentrations below the level of the standard.

In considering exposures of concern at or above 60, 70, and 80 ppb, the Administrator judges that the evidence supporting the occurrence of adverse respiratory effects is strongest for exposures at or above the 70 and 80 ppb benchmarks. While the Administrator has less confidence that adverse effects will occur following exposures to O_3 concentrations as low as 60 ppb, she notes the possibility for adverse effects following such exposures given that (1) CASAC has indicated the moderate lung function decrements (i.e., FEV_1 decrements $\geq$ 10%) that occur in some healthy adults following exposures to 60 ppb O_3, which are large enough to be judged an abnormal response by ATS, could be adverse to people with lung disease (II.B.3), and that (2) airway inflammation has been reported following exposures as low as 60 ppb O_3. She also takes note of CASAC advice that the occurrence of exposures of concern at or above 60 ppb is an appropriate consideration for people (including children) with asthma (Frey, 2014c, p. 6).

[161] As with her consideration of the current standard (II.D.5), the Administrator focuses on estimated exposures of concern in children, including asthmatic children, noting the HREA analyses indicating that exposures of concern occur in a larger percentage of children than adults (given that a larger percentage of children are estimated to spend an extended period of time being physically active outdoors when O_3 concentrations are elevated) (II.C.2). To the extent alternative standards provide an appropriate degree of protection for children, she judges that those standards will also protect adult populations (including at-risk adult populations).

Due to interindividual variability in responsiveness, the Administrator further notes that not every occurrence of an exposure of concern will result in an adverse effect.[162] Repeated occurrences of some of the effects demonstrated following exposures of concern could increase the likelihood of adversity. For example, as discussed in the ISA (U.S. EPA, 2013a, Section 6.2.3), repeated occurrences of airway inflammation could lead to the induction of a chronic inflammatory state; altered pulmonary structure and function, leading to diseases such as asthma; altered lung host defense response to inhaled microorganisms, particularly in potentially at-risk populations such as the very young and old; and altered lung response to other agents such as allergens or toxins. The Administrator notes that the types of lung injury that can occur following exposures of concern, particularly if experienced repeatedly, provide a plausible mode of action by which O_3 may cause other more serious effects. Therefore, the Administrator is most concerned about protecting at-risk populations against repeated occurrences of exposures of concern.

Based on the above considerations, the Administrator focuses on the extent to which a revised standard would be expected to protect populations from experiencing two or more O_3 exposures of concern (i.e., as a surrogate for repeated exposures). While she emphasizes the importance of limiting two or more exposures and reducing their occurrence, compared to the current standard, she balances this emphasis by noting that (1) not all exposures of concern will result in adverse effects; (2) she has less confidence in the occurrence of adverse effects at the 60 ppb benchmark than at the 70 or 80 ppb benchmarks; and (3) the NAAQS are not meant to be

[162] For most of the effects demonstrated in controlled human exposure studies (e.g., airway inflammation, AHR, decreased lung host defense, respiratory symptoms) the available data are not sufficient to quantify the number of people who would experience adverse effects due to O_3 exposures.

zero-risk standards.[163] Therefore, in using estimates of exposures of concern to inform her decisions on alternative standard levels, the Administrator judges that it would not be appropriate to set a standard intended to eliminate all exposures of concern for all benchmarks, particularly the 60 ppb benchmark. Her consideration of specific estimates of exposures of concern is discussed below.

As illustrated in Table 1 (above), the Administrator notes that, in urban study areas, a revised standard with a level of 70 ppb would be expected to eliminate the occurrence of two or more exposures of concern to O_3 concentrations at and above 80 ppb and to virtually eliminate the occurrence of two or more exposures of concern to O_3 concentrations at and above 70 ppb, even in the worst-case urban study area and year. For the 70 ppb benchmark, this reflects about a 95% reduction in the occurrence of two or more exposures of concern, compared to the current standard (Table 4).

Though the Administrator acknowledges greater uncertainty with regard to the occurrence of adverse effects following exposures of concern at or above 60 ppb, she notes that a revised standard with a level of 70 ppb would also be expected to protect the large majority of children in the urban study areas (i.e., about 96% to more than 99% of children in individual urban study areas) from experiencing two or more exposures of concern at or above 60 ppb. Compared to the current standard, this represents a reduction of more than 60% in the occurrence of two or more exposures of concern (Tables 1 and 4).

Based on the above information, the Administrator concludes that a revised O_3 standard with a level of 70 ppb would be expected to virtually eliminate the occurrence of two or more O_3 exposures of concern for the 70 and 80 ppb benchmarks, and to substantially reduce the

[163] *State of Mississippi*, 744 F. 3d at 1343.

occurrence of two or more O_3 exposures of concern for the 60 ppb benchmark, compared to the current standard.

Although the Administrator is less concerned about single occurrences of exposures of concern, she acknowledges that even single exposures to O_3 concentrations at or above benchmark concentrations (particularly for the 70 and 80 ppb benchmarks) could potentially result in adverse effects. To the extent this may be the case, the Administrator notes that a standard with a level of 70 ppb would also be expected to (1) virtually eliminate all occurrences of exposures of concern at or above 80 ppb, even in the worst-case year and location and (2) achieve important reductions, compared to the current standard, in the occurrence of one or more exposures of concern at or above 70 and 60 ppb (i.e., about a 70% reduction for the 70 ppb benchmark and almost a 50% reduction for the 60 ppb benchmark) (Tables 1 and 4).

In further evaluating the potential public health impacts of a standard with a level of 70 ppb, the Administrator also considers the HREA estimates of O_3-induced lung function decrements. To inform her consideration of these decrements, the Administrator takes note of CASAC advice that "estimation of FEV_1 decrements of $\geq$ 15% is appropriate as a scientifically relevant surrogate for adverse health outcomes in active healthy adults, whereas an FEV_1 decrement of $\geq$ 10% is a scientifically relevant surrogate for adverse health outcomes for people with asthma and lung disease" (Frey, 2014c, p. 3). Consistent with this advice, she considers estimates of the occurrence of O_3-induced FEV_1 decrements $\geq$ 10 and 15% as surrogates for the occurrence of adverse health outcomes.

While these surrogates provide perspective on the potential for the occurrence of adverse respiratory effects following O_3 exposures, the Administrator agrees with the conclusion in past reviews that a more general consensus view of the adversity of moderate responses emerges as

the frequency of occurrence increases (61 FR 65722-3) (Dec, 13, 1996). Specifically, she concludes that not every estimated occurrence of an O_3-induced FEV_1 decrement will be adverse and that repeated occurrences of moderate responses, even in otherwise healthy individuals, may be considered to be adverse since they could set the stage for more serious illness. Therefore, the Administrator becomes increasingly concerned about the potential for adversity as the frequency of occurrences increases and, as a result, she focuses primarily on estimates of two or more O_3-induced FEV_1 decrements (i.e., as a surrogate for repeated exposures).

Given the above considerations, the Administrator does not believe it would be appropriate to set a standard that is intended to eliminate all O_3-induced FEV_1 decrements. She notes that this is consistent with CASAC advice, which did not include a recommendation to set the standard level low enough to eliminate all O_3-induced FEV_1 decrements $\geq$ 10 or 15% (Frey, 2014c). Rather, the Administrator considers the extent to which a standard with a level of 70 ppb would be expected to protect the population from experiencing O_3-induced FEV_1 decrements $\geq$ 10 and 15%, including the extent to which such a standard would be expected to achieve reductions in the occurrence of O_3-induced FEV_1 decrements, relative to the current standard.[164]

The Administrator notes that a revised O_3 standard with a level of 70 ppb is estimated to protect about 98 to 99% of children in urban study areas from experiencing two or more O_3-induced FEV_1 decrements $\geq$ 15%, and about 89 to 94% from experiencing two or more

[164] The Administrator additionally notes that, unlike exposures of concern, the variability in lung function risk estimates across urban study areas is often greater than the differences in risk estimates between various standard levels (Table 2, above). Given this, and the resulting considerable overlap between the ranges of lung function risk estimates for different standard levels, although the Administrator has confidence in the lung function risk estimates themselves, she views them as providing a more limited basis than exposures of concern for distinguishing between the degree of public health protection provided by alternative standard levels.

decrements ≥ 10%.[165] Compared to the current standard, these estimates represent decreases in the occurrence of two or more O_3-induced decrements of about 29 and 17%, respectively (Tables 2 and 5). Although the Administrator is less concerned about the public health implications of single O_3-induced lung function decrements, she also gives some consideration to estimates of one or more O_3-induced FEV_1 decrements. In particular, she notes that a revised standard with a level of 70 ppb is estimated to reduce the occurrence of one or more O_3-induced decrements, compared to the current standard, by about 26% (for decrements ≥ 15%) and 15% (for decrements ≥ 10%) (Tables 2 and 5).

Given all of the above information, the Administrator concludes that a revised standard with a level of 70 ppb would be expected to provide substantial protection against O_3 exposures of concern (for benchmark concentrations of 60, 70, 80 ppb) and O_3-induced lung function decrements, and would be expected to result in important reductions in the occurrence of such exposures and decrements, compared to the current standard. This is particularly the case for estimates of two or more occurrences of exposures of concern and lung function decrements.

In next considering the additional protection that would be expected from standard levels below 70 ppb, the Administrator evaluates the extent to which a standard with a level of 65 ppb would be expected to further limit O_3 exposures of concern and O_3-induced lung function decrements.

In addition to eliminating almost all exposures of concern to O_3 concentrations at or above 80 and 70 ppb, even in the worst-case years and locations, the Administrator notes that a revised standard with a level of 65 ppb would be expected to protect more than 99% of children

[165] In the worst-case year and location, a standard with a level of 70 ppb is estimated to protect about 97% of children in urban study areas from experiencing two or more O_3-induced FEV_1 decrements ≥ 15%, and about 87% from experiencing two or more decrements ≥ 10%.

in urban study areas (and 100% of children in some urban study areas) from experiencing two or more exposures of concern at or above 60 ppb. Compared to the current standard, this represents about a 95% reduction in the occurrence of two or more exposures of concern for the 60 ppb benchmark (Tables 1 and 4). In addition, the Administrator notes that a revised standard with a level of 65 ppb is estimated to reduce the occurrence of one or more exposures of concern for the 60 ppb benchmark by about 80%, compared to the current standard (Tables 1 and 4).

With regard to O_3-induced lung function decrements, the Administrator notes that an O_3 standard with a level of 65 ppb is estimated to protect about 98% to more than 99% of children from experiencing two or more O_3-induced FEV_1 decrements $\geq$ 15%, even considering the worst-case year and location, and about 91 to 99% from experiencing two or more decrements $\geq$ 10% (89% in worst-case year and location). These estimates reflect reductions, compared to the current standard, of about 54 and 37%, respectively. A revised standard with a level of 65 ppb is also estimated to reduce the occurrence of one or more lung function decrements $\geq$ 15 and 10%, compared to the current standard, by about 50 and 31%, respectively.

Taken together, the Administrator initially concludes that the evidence from controlled human exposure studies, and the information from quantitative analyses that draw upon these studies (i.e., exposures of concern, O_3-induced FEV_1 decrements), provide strong support for standard levels from 65 to 70 ppb. In particular, she bases this conclusion on the fact that such standard levels would be well below the O_3 exposure concentration shown to result in the widest range of respiratory effects (i.e., 80 ppb), and below the lowest O_3 exposure concentration shown to result in the adverse combination of lung function decrements and respiratory symptoms (i.e., 72 ppb). A standard with a level from 65 to 70 ppb would also be expected to result in important reductions, compared to the current standard, in the occurrence of O_3 exposures of concern for

all of the benchmarks evaluated (i.e., 60, 70, and 80 ppb) and in the risk of O_3-induced lung function decrements $\geq$ 10 and 15%.

In further considering the evidence and exposure/risk information, the Administrator considers the extent to which the epidemiologic evidence, and the quantitative risk estimates based on information from epidemiologic studies, also provide support for standard levels from 65 to 70 ppb. In doing so, as in her consideration of the adequacy of the current O_3 standard, the Administrator focuses on epidemiologic studies of respiratory-related hospital admissions, emergency department visits, and mortality. These considerations are discussed below.

The Administrator first considers the extent to which available epidemiologic studies have reported associations between short-term O_3 concentrations and emergency department visits, hospital admissions, and/or mortality in locations that would likely have met alternative standards with levels from 65 to 70 ppb (U.S. EPA, 2014c, section 4.4.1). In evaluating the epidemiologic evidence in this way, the Administrator places the most weight on single-city studies of short-term O_3 concentrations, recognizing that there were no multicity studies for which air quality data indicated that all cities included in the analyses would likely have met alternative standard levels. In particular, she notes that while single-city studies are more limited than multicity studies in terms of statistical power and geographic coverage, conclusions linking air quality in a given city with health effect associations in that same city can be made with greater certainty for single-city studies of short-term O_3, compared to health effect associations aggregated across multiple cities in multicity studies. In particular, the Administrator notes considerable uncertainty in linking multicity effect estimates (aggregated across multiple cities)

for short-term O_3 with the air quality for subsets of study locations (rather than all locations) likely to have met an alternative standard.[166]

Given the above, the Administrator notes analyses in the PA (U.S. EPA, 2014c, section 4.4.1) indicating that a revised standard with a level of 65 or 70 ppb would be expected to maintain short-term ambient O_3 concentrations below those present in the locations of all of the single-city studies analyzed. As discussed in the PA (U.S. EPA, 2014c, section 4.4.1), this includes several single-city studies conducted in locations that would have violated the current standard, and the single-city study by Mar and Koenig (2009) that reported positive and statistically significant associations with respiratory emergency department visits with children and adults in a location that likely would have met the current standard over the entire study period but that would likely not have met a revised standard with a level of 70 ppb or below. Thus, the Administrator notes that, while the current standard would allow the ambient O_3 concentrations that provided the basis for the health effect associations reported by Mar and Koenig (2009), a revised O_3 standard with a level at or below 70 ppb would require reductions in those ambient O_3 concentrations. While the Administrator acknowledges uncertainty in the

[166] In recognizing that multicity studies are often emphasized over single-city studies for purposes of making weight of evidence judgments (U.S. EPA, 2013a), the Administrator's judgment in this case applies specifically to interpreting air quality analyses for epidemiologic studies of short-term O_3 concentrations where multicity effect estimates are aggregated across cities, and where individual city effect estimates are not presented (as is the case for the key O_3 studies analyzed in the PA, with the exception of the study by Stieb et al. (2009) where none of the city-specific effect estimates for asthma emergency department visits were statistically significant). Because reported multicity effect estimates do not allow health effect associations to be disaggregated by individual city, it is not possible to assign the multicity health effect association to the air quality in any one study location, or to the air quality in a particular subset of locations. In contrast, for epidemiologic studies of long-term concentrations, where multicity effect estimates are based on comparisons across cities, different judgments have been made by EPA with regard to the utility of multicity studies (see, e.g. 78 FR 3086 at 3103/2, January 15, 2013) (and see discussion below of study by Jerrett et al., 2009).

extent to which the reported O_3-associated emergency department visits could be further reduced by standard levels below 65 or 70 ppb, she concludes that this analysis indicates that a revised standard with a level at least as low as 70 ppb would result in improvements in public health, beyond the protection provided by the current standard, in the locations of the single-city epidemiologic studies that reported significant health effect associations.

As discussed above, the Administrator notes the greater uncertainty in interpreting air quality in locations of multicity epidemiologic studies of short-term O_3 for the purpose of evaluating alternative standard levels (II.D.1 and U.S. EPA, 2014c, section 4.4.1). Therefore, she places less weight on these studies than on the single-city studies noted above. Despite this uncertainty, she notes that PA analyses suggest that standard levels of 65 or 70 ppb would require additional reductions, beyond those required by the current standard, in ambient O_3 concentrations in several of the epidemiologic study locations that provided the basis for statistically significant O_3 health effect associations. For example, she notes that Dales et al. (2006) reported significant associations with respiratory hospital admissions based on air quality in 11 Canadian cities, most of which would likely have met the current standard over the entire study period (i.e., seven cities) but would have violated a standard with a level of 70 ppb or below over at least part of that period (U.S. EPA, 2014c, Table 4-1). She further notes that Katsouyanni et al. (2009) reported statistically significant associations with mortality based on air quality in 12 Canadian cities, most of which would likely have met the current standard (i.e., eight study cities) and a standard with a level of 70 ppb (i.e., seven study cities) over the entire study period, but would have violated a standard with a level of 65 ppb over at least part of that period (U.S. EPA, 2014c, Table 4-1). While most of the other multicity epidemiologic studies evaluated also suggest that a level from 65 to 70 ppb would result in public health improvements,

compared to the current standard, the Administrator acknowledges that several multicity epidemiologic studies reported O_3 health effect associations when the majority of study cities would likely have met standards with levels from 65 to 70 ppb. However, given the important uncertainties in interpreting the air quality in these multicity studies, the Administrator places limited weight on them overall, relative to the single-city studies noted above (and relative to the information based on controlled human exposure studies).

With regard to long-term O_3 concentrations, the Administrator considers the long-term O_3 metrics reported to be associated with mortality or morbidity in recent epidemiologic studies (e.g., seasonal averages of 1-hour or 8-hour daily max concentrations). Compared to the current standard, she notes that analyses in the PA (U.S. EPA, 2014c, section 4.4.1) suggest a revised standard with a level of 65 or 70 ppb would more effectively maintain long-term O_3 concentrations below those where the multicity study by Jerrett et al. (2009) indicates the most confidence in the reported association with respiratory mortality (II.B.2, II.D.1). Based on additional information from the study by Jerrett et al. (2009), the Administrator also notes HREA analyses indicating that a revised standard with a level of 65 or 70 ppb would be expected to reduce the risk of respiratory mortality associated with long-term O_3 concentrations (though she also notes important uncertainties with these risk estimates, as described below). Finally, she notes analyses in the HREA suggesting that a revised standard with a level of 65 or 70 ppb would be expected to reduce long-term O_3 concentrations, defined in terms of O_3 metrics similar to the long-term metrics that have been reported in recent epidemiologic studies to be associated with respiratory morbidity (i.e., seasonal averages of daily maximum 8-hour concentrations). Given the above evidence and information, the Administrator concludes that a revised 8-hour

standard with a level from 70 to 65 ppb could increase public health protection, compared to the current standard, against effects associated with long-term O_3 exposures.

In further evaluating information from epidemiologic studies, the Administrator also considers the HREA's epidemiology-based risk estimates of morbidity and mortality associated with short-term O_3 (U.S. EPA, 2014a). Compared to the weight given to the evidence from controlled human exposure studies, and to HREA estimates of exposures of concern and lung function risks, she places relatively less weight on epidemiology-based risk estimates. In doing so, she notes that the overall conclusions from the HREA likewise reflect relatively less confidence in estimates of epidemiology-based risks than in estimates of exposures of concern and lung function risks. As discussed above (II.C.3.b), this is based on the greater uncertainties associated with mortality and morbidity risk estimates, including the heterogeneity in effect estimates between locations, the potential for exposure measurement errors, and uncertainty in the interpretation of the shape of concentration-response functions at lower O_3 concentrations. The Administrator further notes the HREA conclusion that lower confidence should be placed in the results of the assessment of respiratory mortality risks associated with long-term O_3 exposures, primarily because that analysis is based on only one study (even though that study is well-designed) and because of the uncertainty in that study regarding the existence and identification of a potential threshold in the concentration-response function (U.S. EPA, 2014a, section 9.6).

In considering epidemiology-based risk estimates, the Administrator focuses on the extent to which potential alternative O_3 standards are estimated to reduce the risk of mortality associated with short-term exposures to O_3, noting the similar patterns of risk across urban study areas and air quality scenarios for respiratory morbidity endpoints (II.C.3). Given the

uncertainties in epidemiology-based risk estimates, the Administrator focuses on the general magnitudes of risk changes estimated for standard levels of 65 and 70 ppb, compared to the current standard, rather than placing a large amount of weight on the absolute estimates of O_3-associated deaths. In doing so, she notes the CASAC conclusion that "[a]lthough the estimates for short-term exposure impacts are subject to uncertainty, the data supports a conclusion that there are meaningful reductions in mean premature mortality associated with ozone levels lower than the current standard" (Frey, 2014a, p. 10). She further notes that, as discussed above (II.C.3.b), the HREA risk estimates for urban study areas are likely to understate the average reductions in O_3-associated mortality and morbidity risks that would be experienced across the U.S. population as a whole upon meeting standards with lower levels.

The Administrator's primary focus is on risks associated with O_3 concentrations in the upper portions of ambient distributions, given the greater uncertainty associated with the shapes of concentration-response curves for O_3 concentrations in the lower portions of ambient distributions.[167] The Administrator further notes that experimental studies provide the strongest evidence for O_3-induced effects following exposures to O_3 concentrations corresponding to the upper portions of typical ambient distributions. In particular, as discussed above, she notes controlled human exposure studies showing respiratory effects following exposures to O_3 concentrations at or above 60 ppb (II.B).

In considering risks associated with O_3 concentrations in the upper portions of ambient distributions, the Administrator focuses on area-wide O_3 concentrations at or above 40 ppb and 60 ppb. For area-wide O_3 concentrations at or above 40 ppb, the Administrator notes that revised

[167] The ISA concludes that there is less certainty in the shape of concentration-response functions for area-wide O_3 concentrations at the lower ends of warm season distributions (i.e., below about 20 to 40 ppb) (U.S. EPA, 2013a, section 2.5.4.4).

standards with levels of 70 or 65 ppb are estimated to reduce the number of premature deaths associated with short-term O_3 concentrations by about 10% and almost 50%, respectively, compared to the current standard.[168] In addition, for area-wide concentrations at or above 60 ppb, revised standards are estimated to reduce O_3-associated premature deaths by about 50% to 70% for a standard level of 70 ppb, and by more than 80% for a standard level of 65 ppb.[169] Risk reductions are smaller when total risks are considered (II.C.3.b).

Given all of the above evidence, exposure/risk information, and advice from CASAC, the Administrator proposes to revise the level of the current primary O_3 standard to within the range of 65 to 70 ppb. She concludes that a standard with a level from within this range could reasonably be judged to be requisite to protect public health with an adequate margin of safety, based on her consideration of the evidence and information discussed above. In reaching this conclusion, she particularly notes that a level from anywhere within this range would be below the lowest O_3 exposure concentration shown to result in the adverse combination of respiratory symptoms and lung function decrements (i.e., 72 ppb), would be expected to maintain ambient O_3 concentrations below those in locations where single-city studies assessed in the ISA have reported statistically significant O_3 health effect associations, and would be expected to result in important reductions in O_3 exposures and health risks, compared to the current standard.

---

[168] For area-wide O_3 concentrations at or above 40 ppb, reductions in estimated premature deaths are disproportionately larger with the 65 ppb standard level than with the 70 ppb standard level. This results from the larger air quality adjustments required to meet the 65 ppb level. Across urban study areas, the additional reductions required to meet 65 ppb result in many fewer days with area-wide O_3 concentrations at or above 40 ppb and, therefore, many fewer O_3-associated deaths for area-wide concentrations at or above 40 ppb (U.S. EPA, 2014a, Figures 7-2 and 7-3).
[169] Though only a relatively small number of days in urban study areas had area-wide O_3 concentrations at or above 60 ppb.

The Administrator notes that the determination of what constitutes an adequate margin of safety is expressly left to the judgment of the EPA Administrator. She further notes that in evaluating how particular standards address the requirement to provide an adequate margin of safety, the Administrator must consider such factors as the nature and severity of the health effects, the size of sensitive population(s) at risk, and the kind and degree of the uncertainties that must be addressed (I.B, above). Consistent with past practice and long-standing judicial precedent, she takes the need for an adequate margin of safety into account as an integral part of her decision-making on the appropriate level, averaging time, form, and indicator of the standard.[170]

The Administrator notes that the NAAQS are not designed to be zero-risk or background standards, and that the sizeable risk reductions that are estimated in the HREA to be associated with standard levels of 65 or 70 ppb represent substantial improvements in public health for important segments of the population, including at-risk groups such as children and people with asthma. Although any rationale supporting a decision to set a specific level within the range of 65 to 70 ppb would discuss the full body of evidence and information, the Administrator notes that certain aspects of this evidence and information could be particularly important in distinguishing between the appropriateness of a level closer to 65 ppb versus a level closer to 70 ppb.[171]

---

[170] See, e.g. *NRDC v. EPA*, 902 F. 2d 962, 973-74 (D.C. Cir. 1990).

[171] Although this discussion refers to supporting rationale for a level of 65 ppb or 70 ppb, the Administrator is proposing the entire range between 65 and 70 ppb. The Administrator notes that although neither the PA nor CASAC reached conclusions or provided advice on a standard set at a specific level between 65 ppb and 70 ppb, there is nothing in either the evidence, exposure/risk information, or CASAC advice that would preclude such a standard level.

For example, a level at or near 65 ppb could be judged requisite to protect public health with an adequate margin of safety to the extent the Administrator places greater weight on the importance of: (1) eliminating almost all exposures of concern (even single occurrences) at or above 70 and 80 ppb, even in worst-case years and locations; (2) almost eliminating the occurrence of two or more exposures of concern at or above 60 ppb; (3) achieving additional reductions in O_3-induced FEV_1 decrements, beyond those achieved with a level of 70 ppb (4) maintaining ambient concentrations below those in locations of single-city studies and more effectively doing so for multicity studies (i.e., more effectively than 70 ppb); and (5) achieving substantial reductions, compared to a standard with a level of 70 ppb, in mortality associated with the upper portion of the distribution of ambient O_3 concentrations, despite uncertainties in risk estimates.

In contrast, a level at or near 70 ppb could be judged requisite to protect public health with an adequate margin of safety to the extent the Administrator places a greater amount of weight (i.e., greater than for 65 ppb) on the importance of: (1) almost eliminating the occurrence of two or more exposures of concern at or above 70 and 80 ppb, even in the worst-case year and location; (2) substantially reducing, but not eliminating, the occurrence of two or more exposures of concern at or above 60 ppb, noting conclusions regarding increasing uncertainty in adverse effects for the 60 ppb benchmark; (3) reducing, but not eliminating, the occurrence of one or more exposures of concern, noting that not all exposures of concern result in adverse effects; (4) maintaining ambient O_3 concentrations below those in locations of single-city epidemiologic studies, and uncertainties in analyses of air quality in multicity study locations; and (5) recognizing uncertainties in epidemiology-based risk estimates.

In considering CASAC advice on the range of standard levels, the Administrator first notes CASAC's conclusion that there is adequate scientific evidence to consider a range of levels for a primary standard that includes an upper end at 70 ppb. For the reasons discussed above, she agrees with this advice. She also notes that while CASAC concluded that a standard with a level of 70 ppb "may not meet the statutory requirement to protect public health with an adequate margin of safety" (Frey, 2014c, p. 8), it further acknowledged that "the choice of a level within the range recommended based on scientific evidence is a policy judgment under the statutory mandate of the Clean Air Act" (Frey, 2014c, p. ii). While she agrees with CASAC that it is appropriate to consider levels below 70 ppb, as reflected in her range of proposed levels from 65 to 70 ppb, for the reasons discussed above she also concludes that a standard level as high as 70 ppb, which CASAC concluded could be supported by the scientific evidence, could reasonably be judged to be requisite to protect public health with an adequate margin of safety.

The Administrator has also considered the appropriateness of standard levels below 65 ppb. In doing so, she notes the conclusions of the PA and the advice of CASAC that it would be appropriate for her to consider standard levels as low as 60 ppb. In particular, she notes that a decision to set the primary O_3 standard level at 60 ppb would place a large amount of weight on the potential public health importance of virtually eliminating even single occurrences of exposures of concern at and above 60 ppb, though controlled human exposure studies have not reported the adverse combination of respiratory symptoms and decrements in lung function following exposures to 60 ppb O_3; on the potential public health importance of further reducing the occurrence of O_3-induced lung function decrements $\geq$ 10 and 15%; on analyses of ambient O_3 concentrations in locations of multicity epidemiologic studies, despite uncertainties in linking multicity effect estimates for short-term O_3 with air quality in individual study cities; and on epidemiology-based risk estimates, despite the important uncertainties in those estimates.

However, as discussed more fully above, given the uncertainties associated with the adversity of exposures to 60 ppb O_3, particularly single occurrence of such exposures; uncertainties associated with air quality analyses in locations of multicity epidemiologic studies; and uncertainties in epidemiology-based risk estimates, particularly uncertainties in the shape of the concentration-response functions at lower O_3 concentrations and uncertainties associated with the heterogeneity in O_3 effect estimates across locations, the Administrator does not agree that it is appropriate to place significant weight on these factors or to use them to support the appropriateness of standard levels below 65 ppb. Compared to O_3 standard levels from 65 to 70 ppb, the Administrator concludes that the extent to which standard levels below 65 ppb could result in further public health improvements becomes notably less certain. Therefore, she concludes that it is not appropriate to propose standard levels below 65 ppb.[172]

The Administrator acknowledges that her proposed range of 65 to 70 ppb does not include the lower portion of the range supported by CASAC. In reaching the conclusion that this is appropriate, she focuses on CASAC's rationale for levels as low as 60 ppb. In particular, she notes the following CASAC advice (Frey, 2014c, p. 7):

> The CASAC concurs that 60 ppb is an appropriate and justifiable scientifically based lower bound for a revised primary standard. This is based upon findings of adverse effects, including clinically significant lung function decrements and airway inflammation, after exposures to 60 ppb ozone in healthy adults with moderate exertion (Adams 2006; Schelegle et al., 2009; Brown et al., 2008; Kim et al., 2011), with limited evidence of adverse effects below 60 ppb.

In considering this advice, the Administrator notes that CASAC focused on the importance of limiting exposures to O_3 concentrations as low as 60 ppb. As discussed above, the Administrator agrees with this advice. In particular, she notes that standards within the proposed

[172] Although, as discussed below, she solicits comment on standard levels as low as 60 ppb.

range of 65 to 70 ppb would be expected to substantially limit the occurrence of exposures of concern to O_3 concentrations at or above 60 ppb, particularly the occurrence of two or more exposures.[173] When she further considers that not all exposures of concern lead to adverse effects, and that the NAAQS are not meant to be zero-risk or background standards, the Administrator judges that alternative standard levels below 65 ppb are not needed to further reduce such exposures. Therefore, the Administrator's initial conclusion is that standard levels below 65 ppb would be more than requisite to protect public health with an adequate margin of safety.

In reaching this initial conclusion, the Administrator acknowledges that alternative approaches to viewing the available scientific evidence and exposure/risk information, and to viewing the uncertainties inherent in that evidence and information, could lead one to reach a different conclusion. In particular, as noted above, she recognizes that levels as low as 60 ppb could potentially be supported, to the extent substantial weight is placed on the public health importance of estimates of one or more occurrences of exposures of concern at or above 60 ppb and O_3-induced lung function decrements $\geq$ 10%; analyses of ambient O_3 concentrations in locations of multicity epidemiologic studies; and epidemiology-based estimates of total risk. This approach would also place a large amount of weight on the possibility that at-risk groups would experience adverse effects at lower levels than the benchmarks derived from clinical studies conducted using healthy adult subjects, despite the fact that these studies have not reported a statistically significant increase in respiratory symptoms, combined with lung function

[173] In fact, as noted above (Table 4), a standard with a level of 70 ppb would be expected to limit multiple occurrences of exposures of concern at or above the 60 ppb benchmark to as low as 0.5% in urban case study areas (and as low as 0% for a standard with a level of 65 ppb).

decrements, following exposures to 60 ppb.[174] Such an approach to viewing the evidence and exposure/risk information would place very little weight on the uncertainties in these estimates and analyses. In some cases, elements of this approach have been supported by public commenters, leading some commenters to recommend setting the level of the primary O_3 standard at least as low as 60 ppb. In recognition of such an alternative approach to viewing the evidence and information, in addition to proposing to set the level of the O_3 standard from 65 to 70 ppb, the Administrator solicits comment on alternative standard levels below 65 ppb, and as low as 60 ppb. In doing so, the Administrator reiterates that the CAA does not require the establishment of a primary NAAQS at a zero-risk level or at background concentration levels, but rather at a level that reduces risk sufficiently so as to protect public health with an adequate margin of safety (I.A).

F. Proposed Decision on the Primary Standard

For the reasons discussed above, and taking into account information and assessments presented in the 2013 ISA, 2014 HREA and integration of this information and assessments into staff conclusions in the 2014 PA, the advice and recommendations of CASAC, and public comments received during the development of these documents, the Administrator proposes to retain the current indicator, averaging time and form of the primary O_3 standard, and to set a new level for the 8-hour primary O_3 standard. Specifically, the Administrator proposes to set the level of the 8-hour primary O_3 standard to within the range of 65 to 70 ppb. The proposed 8-hour primary standard would be met at an ambient air monitoring site when the 3-year average of the

[174] More specifically, as discussed above, respiratory symptoms have been evaluated following 6.6-hour exposures to average O_3 concentrations of 60 ppb (Adams, 2006; Kim et al., 2011) and 63 ppb (Schelegle et al., 2009). None of these studies reported a statistically significant increase in respiratory symptoms, compared to filtered air controls.

annual fourth-highest daily maximum 8-hour average O_3 concentration is less than or equal to the level of the revised standard that is promulgated. Thus, the Administrator proposes to set a standard with a level within this range. For the reasons discussed above, the Administrator also solicits comment on setting the level of the primary O_3 standard below 65 ppb, and as low as 60 ppb.

III. Communication of Public Health Information

Information on the public health implications of ambient concentrations of criteria pollutants is currently made available primarily through EPA's Air Quality Index (AQI) program. The AQI has been in use since its inception in 1999 (64 FR 42530). It provides accurate, timely, and easily understandable information about daily levels of pollution (40 CFR 58.50). It is designed to tell individual members of the public how clean or unhealthy their air is, whether health effects might be a concern, and, if so, measures individuals can take to reduce their exposure to air pollution. The AQI focuses on health effects individuals may experience within a few hours or days after breathing unhealthy air. The AQI establishes a nationally uniform system of indexing pollution concentrations for O_3, carbon monoxide, nitrogen dioxide, particulate matter and sulfur dioxide. The AQI converts pollutant concentrations in a community's air to a number on a scale from 0 to 500. Reported AQI values enable the public to know whether air pollution concentrations in a particular location are characterized as good (0 - 50), moderate (51 - 100), unhealthy for sensitive groups (101 - 150), unhealthy (151 - 200), very unhealthy (201 - 300), or hazardous (301 - 500). The AQI index value of 100 typically corresponds to the level of the short-term NAAQS for each pollutant. For the O_3 NAAQS, an 8-hour average concentration of 75 ppb corresponds to an AQI value of 100. An AQI value greater than 100 means that a pollutant is in one of the unhealthy categories (i.e., unhealthy for sensitive groups, unhealthy,

very unhealthy, or hazardous) on a given day; an AQI value at or below 100 means that a pollutant concentration is in one of the satisfactory categories (i.e., moderate or good). An additional consideration in selecting breakpoints is for each category to span at least a 15 ppb range to allow for more accurate forecasting. Decisions about the pollutant concentrations at which to set the various AQI breakpoints, that delineate the various AQI categories, draw directly from the underlying health information that supports the NAAQS review.

The Agency recognizes the importance of revising the AQI in a timely manner to be consistent with any revisions to the NAAQS. Therefore EPA is proposing conforming changes to the AQI, in connection with the Agency's proposed decision on revisions to the O_3 NAAQS if revisions to the primary standard are promulgated. These conforming changes would include setting the 100 level of the AQI at the same level as the revised primary O_3 NAAQS and also making adjustments based on health information from this NAAQS review to AQI breakpoints at the lower end of each range (i.e., AQI values of 50, 150, 200 and 300). The EPA does not propose to change the level at the top of the index (i.e., AQI value of 500) that typically is set equal to the Significant Harm Level (40 CFR 51.16), which would apply to state contingency plans.

The EPA is proposing to revise the AQI for O_3 by setting an AQI value of 100 equal to the level of the revised O_3 standard (65-70 ppb). The EPA is also proposing to revise the following breakpoints: an AQI value of 50 to within a range from 49-54 ppb; an AQI value of 150 to 85 ppb; an AQI value of 200 to 105 ppb, and an AQI value of 300 to 200 ppb. All these levels are averaged over 8 hours. The EPA is proposing to set an AQI value of 50, the breakpoint between the good and moderate categories, at 15 ppb below the value of the proposed standard, i.e. to within a range from 49 to 54 ppb. The EPA is taking comment on what level within this

range to select, recognizing that there is no health message for either at-risk or healthy populations in the good category. Thus, the level selected should be below the lowest concentration (i.e., 60 ppb) that has been shown in controlled human exposure studies of healthy adults[175] to cause moderate lung function decrements (i.e., FEV_1 decrements ≥ 10%, which could be adverse to people with lung disease), large lung function decrements (i.e., FEV_1 decrements ≥ 20%) in a small proportion of people, and airway inflammation.[176] The EPA is proposing to set an AQI value of 150, the breakpoint between the unhealthy for sensitive groups and unhealthy categories, at 85 ppb. At this level, controlled human exposure studies of healthy adults indicate that up to 25% of exposed people are likely to have moderate lung function decrements (i.e., 25% have FEV_1 decrements ≥ 10%; 12% have FEV_1 decrements ≥ 15%) and up to 7% are likely to have large lung function decrements (i.e., FEV_1 decrements ≥ 20%) (McDonnell et al., 2012; Figure 7). Large lung function decrements would likely interfere with normal activity for many healthy people. For people with lung disease, large lung function decrements would likely interfere with normal activity for most people and would increase the likelihood that they would seek medical treatment (72 FR 37850, July 11, 2007). The EPA is proposing to set an AQI value of 200, the breakpoint between the unhealthy and very unhealthy categories, at 105 ppb. At this level, controlled human exposure studies of healthy adults indicate that up to 38% of exposed people are likely to have moderate lung function decrements (i.e., 38% have FEV_1 decrements ≥ 10%; 22% have FEV_1 decrements ≥ 15%) and up to 13% are likely to have large lung function decrements (i.e., FEV_1 decrements ≥ 20%). The EPA is proposing to set an AQI value of 300,

[175] Effects would likely be greater in people with asthma.
[176] Exposures to 50 ppb have not been evaluated experimentally, but are estimated to potentially affect only a small proportion of healthy adults and with only a half to a third of the moderate to large lung function decrements observed at 60 ppb (McDonnell et al., 2012; Figure 7).

the breakpoint between the very unhealthy and hazardous categories, at 200 ppb. At this level, controlled human exposure studies of healthy adults indicate that up to 25% of exposed individuals are likely to have large lung function decrements (i.e., FEV_1 decrements ≥ 20%), which would interfere with daily activities for many of them. Large lung function decrements would interfere with daily activities for most people with lung disease, and likely cause them to seek medical attention.

Table 6. Proposed AQI Breakpoints

AQI Category	Index Values	Existing Breakpoints (ppb, 8-hour average)	Proposed Breakpoints (ppb, 8-hour average)
Good	0 - 50	0 - 59	0 – (49 to 54)
Moderate	51 - 100	60 - 75	(50 to 55) - (65 to 70)
Unhealthy for Sensitive Groups	101 - 150	76 - 95	(66 to 71) - 85
Unhealthy	151 - 200	96 - 115	86 - 105
Very Unhealthy	201 - 300	116 - 374	106 - 200
Hazardous	301 - 400	375 -	201 -
	401 - 500		

EPA believes that the proposed breakpoints reflect an appropriate balance between reflecting the health evidence that is the basis for the proposed primary O_3 standard and providing category ranges that are large enough to be forecasted accurately, so that the new AQI for O_3 can be implemented more easily in the public forum for which the AQI ultimately exists. However, the EPA recognizes that some have expressed alternative approaches to viewing the evidence and information and solicits comment on these proposed revisions to the AQI.

With respect to reporting requirements (40 CFR Part 58, §58.50), EPA proposes to revise 40 CFR Part 58, §58.50 (c) to require the AQI reporting requirements to be based on the latest available census figures, rather than the most recent decennial U.S. census. This change is consistent with our current practice of using the latest population figures to make monitoring requirements more responsive to changes in population.

IV. Rationale for Proposed Decision on the Secondary Standard

This section presents the rationale for the Administrator's proposed decisions regarding the need to revise the current secondary O_3 NAAQS and the appropriate revisions to the standard, including her proposed decisions that the current secondary standard is not requisite to protect public welfare and should be revised to provide additional public welfare protection. Based on her consideration of the full body of welfare effects evidence and related analyses, the Administrator proposes to conclude that ambient O_3 concentrations in terms of a W126 index value, averaged across three consecutive years, within the range from 13 ppm-hrs to 17 ppm-hrs would provide the requisite protection against known or anticipated adverse effects to the public welfare. In considering policy options for achieving that level of air quality, the Administrator has further considered the full body of information, including air quality analyses that relate ambient O_3 concentrations in terms of a three-year average W-126-based metric and in terms of the form and averaging time for the current standard. Based on this consideration, the Administrator proposes to revise the level of the current secondary standard to within the range of 0.065 to 0.070 ppm to achieve the appropriate air quality.

As discussed more fully below, this proposal is based on a thorough review, in the ISA, of the latest scientific information on O_3-induced environmental effects. This proposed decision also takes into account: (1) staff assessments in the PA of the most policy-relevant information in the ISA and WREA analyses of air quality, exposure, and ecological risks and associated ecosystem services; (2) CASAC advice and recommendations; and, (3) public comments received during the development of these documents, either in connection with CASAC meetings or separately.

This proposed decision draws on the ISA's integrative synthesis of the entire body of evidence, published through July 2011, on environmental effects associated with the presence of O_3 and related photochemical oxidants in the ambient air. As summarized in section IV.B below, this body of evidence addresses the range of environmental responses associated with exposure to ambient levels of O_3 (U.S. EPA, 2013a, ISA chapters 9-10), and includes more than four hundred new studies that build on the extensive evidence base from the last review. This rationale also draws upon the results of quantitative exposure and risk assessments, summarized in section IV.C below. Section IV.D presents the Administrator's proposed decisions on the adequacy of the current secondary standard (section IV.D.3) drawing on both evidence-based and exposure/risk-based considerations in the PA (section IV.D.1) and advice from CASAC (section IV.D.2). Proposed conclusions on alternative standards are summarized in section IV.E.

A. Approach

In evaluating whether it is appropriate to retain or revise the current secondary O_3 standard, the Administrator adopts an approach in this review that builds upon the general approach used in the 2008 review[177] and reflects the broader body of scientific evidence now available, updated exposure/risk information, advances in O_3 air quality modeling, and air monitoring information. This review of the standard also considers the July 2013 remand of the secondary standard by the U.S. Court of Appeals for the D.C. Circuit, such that the proposed decision described herein incorporates the EPA's response to this remand.

The Administrator's decisions in the 2008 review were based on an integration of information on welfare effects associated with exposure to O_3, judgments on the adversity and

[177] The 2008 revision of the O_3 secondary standard, the proposed reconsideration of the 2008 decision, and the 2013 court decision on the 2008 revision of the secondary standard are summarized in section I.C above.

public welfare significance of key effects, and judgments as to what standard would be requisite to protect public welfare. These considerations were informed by air quality and related analyses, quantitative exposure and risk assessments, and qualitative assessment of impacts that could not be quantified. As a result of the 2008 review, the Administrator concluded the then-current secondary standard did not provide the requisite public welfare protection and it was revised. The current secondary standard is 75 ppb based on the annual fourth-highest daily maximum 8-hour average concentration, averaged over three consecutive years, which is identical to the current primary standard. In 2008, the Administrator considered the then-available monitoring data with regard to relationships between the revised primary standard and degree of protection of public welfare from cumulative seasonal O_3 exposures, expressed in terms of the W126 exposure index (described in section IV.B.1 below), and decided to revise the secondary standard to be equal to the revised primary standard (73 FR 16499-16500, March 27, 2008). In remanding the 2008 decision on the secondary standard back to the EPA (described in section I.C above), the U.S. Court of Appeals for the D.C. Circuit determined that EPA did not specify what level of air quality was requisite to protect public welfare from adverse public welfare effects or explain why any such level would be requisite. Mississippi, 744 F.3d at 272-73.

In addition to reviewing the most recent scientific information as required by the CAA, this rulemaking responds to the remand and fully explains the Administrator's proposed conclusions as to the level of air quality requisite to protect public welfare from known or anticipated effects. Our general approach in considering the scientific information available in this review involves consideration of the integrative synthesis of the entire body of available scientific evidence in the ISA (U.S. EPA, 2013a), including information on biologically relevant exposure indices, exposure/risk and air quality modeling analyses presented in the WREA (U.S.

EPA, 2014b), staff analyses in the PA; advice and recommendations from CASAC (Frey, 2014b, c), and public comments. We note that in drawing conclusions on the secondary standard, the final decision to retain or revise the standard is a public welfare policy judgment to be made by the Administrator. The Administrator's final decision will draw upon the available scientific evidence for O_3-attributable welfare effects and on analyses of exposures and public welfare risks based on impacts to vegetation, ecosystems and their associated services, as well as judgments about the appropriate weight to place on the range of uncertainties inherent in the evidence and analyses. Such judgments in the context of this review include: the weight to place on the evidence of specific vegetation-related effects estimated to result across a range of cumulative seasonal concentration-weighted O_3 exposures; the weight to give associated uncertainties, including those related to the variability in occurrence of such effects in areas of the U.S., especially areas of particular public welfare significance; and, judgments on the extent to which such effects in such areas may be considered adverse to public welfare.

As provided in the CAA, section 109(b)(2), the secondary standard is to "specify a level of air quality the attainment and maintenance of which in the judgment of the Administrator … is requisite to protect the public welfare from any known or anticipated adverse effects associated with the presence of such air pollutant in the ambient air." Effects on welfare include, but are not limited to, "effects on soils, water, crops, vegetation, man-made materials, animals, wildlife, weather, visibility, and climate, damage to and deterioration of property, and hazards to transportation, as well as effects on economic values and on personal comfort and well-being" (CAA section 302(h)). As recognized in the last review, the secondary standard is not meant to protect against all known or anticipated O_3-related effects, but rather those that are judged to be adverse to the public welfare (73 FR 16496, March 27, 2008). Thus, the level of protection from

known or anticipated adverse effects to public welfare that is requisite for the secondary standard is a public welfare policy judgment to be made by the Administrator. In the current review, the Administrator's judgment is informed by conclusions drawn with regard to adversity of effects to public welfare in decisions on secondary O_3 standards in past reviews.

In the 2008 decision, the Administrator concluded that the degree to which O_3 effects on vegetation should be considered to be adverse to the public welfare depends on the intended use of the vegetation and the significance of the vegetation to the public welfare, and also applied this concept beyond the species level to the ecosystem level (73 FR 16496, March 27, 2008). In so doing, the Administrator took note of "a number of actions taken by Congress to establish public lands that are set aside for specific uses that are intended to provide benefits to the public welfare, including lands that are to be protected so as to conserve the scenic value and the natural vegetation and wildlife within such areas, and to leave them unimpaired for the enjoyment of future generations" (73 FR 16496, March 27, 2008). The notice for the 2008 decision further noted that [s]uch public lands that are protected areas of national interest include national parks and forests, wildlife refuges, and wilderness areas" (73 FR 16496, March 27, 2008).[178,179] The Administrator additionally recognized that "States, Tribes and public interest groups also set

[178] For example, the National Park Service Organic Act of 1916 established the National Park Service (NPS) and, in describing the role of the NPS with regard to "Federal areas known as national parks, monuments, and reservations", stated that the "fundamental purpose" for these Federal areas "is to conserve the scenery and the natural and historic objects and the wild life therein and to provide for the enjoyment of the same in such manner and by such means as will leave them unimpaired for the enjoyment of future generations." 16 U.S.C. § 1.

[179] As a second example, the Wilderness Act of 1964 defines designated "wilderness areas" in part as areas "protected and managed so as to preserve [their] natural conditions" and requires that these areas "shall be administered for the use and enjoyment of the American people in such manner as will leave them unimpaired for future use and enjoyment as wilderness, and so as to provide for the protection of these areas, [and] the preservation of their wilderness character …" 16 U.S.C. § 1131 (a).

aside areas that are intended to provide similar benefits to the public welfare, for residents on State and Tribal lands, as well as for visitors to those areas" (73 FR 16496, March 27, 2008). The Administrator took note of the "clear public interest in and value of maintaining these areas in a condition that does not impair their intended use and the fact that many of these lands contain O_3-sensitive species" (73 FR 16496, March 27, 2008). Similarly, in judgments of adversity to public welfare in the 2010 proposed reconsideration, the Administrator proposed to place the highest priority and significance on vegetation and ecosystem effects to sensitive species that are known to or are likely to occur in federally protected areas such as national parks and other Class I areas,[180] or on lands set aside by states, tribes and public interest groups to provide similar benefits to the public welfare (75 FR 3023-24, January 19, 2010).

In the current review, our consideration of the scientific evidence for effects on vegetation is based fundamentally on using information from controlled chamber studies, free air methodologies, and field-based observational, survey and gradient studies. Such evidence, discussed below, informs consideration of welfare endpoints and at-risk species and ecosystems on which to focus the current review, and consideration of the ambient O_3 conditions under which various welfare effects are known or anticipated to occur. As in past reviews, we recognize that the available evidence has not provided identification of a threshold in exposure or ambient O_3 concentrations below which it can be concluded with confidence that O_3-attributable effects on vegetation do not occur, when considering the broad range of O_3-sensitive plant species growing within the U.S and the array of effects. This is due in part to the fact that

[180] As defined by section 162 of the CAA, Class I areas include all international parks, national wilderness areas which exceed 5,000 acres in size, national memorial parks which exceed 5,000 acres in size, and national parks which exceed six thousand acres in size, provided the park or wilderness area was in existence on August 7, 1977, as well as other areas designated as Class I consistent with that section of the Act. The current Class I areas are specified at 40 CFR part 81.

research shows that there is variability in sensitivity between and within species and that numerous factors, i.e., chemical, physical, biological, and genetic, can influence the direction and magnitude of the studied effect (U.S. EPA, 2013a, section 9.4.8). In the absence of evidence for a discernible threshold, the general approach to considering the available O_3 welfare effects evidence involves characterizing the confidence in conclusions regarding O_3-attributable vegetation effects over the ranges of cumulative seasonal O_3 exposure values evaluated in chamber studies and in field studies in areas where O_3-sensitive vegetation are known to occur, as well as characterizing the extent to which these effects can be considered adverse at the plant level and beyond. With this approach, we consider the evidence for O_3 affecting other ecosystem components (such as soils, water, and wildlife) and their associated goods and services, through its effects on vegetation, as well as the associated uncertainties.

Our general approach further recognizes the complexity of judgments to be made regarding the identification of particular vegetation effects as welfare effects and regarding the point that known or anticipated vegetation-related effects become adverse to the public welfare. For example, in addition to the magnitude of the ambient concentrations, the species present, their sensitivity to O_3, and their public welfare importance are also essential considerations in drawing conclusions regarding the significance of public welfare impact. Taking this into account, we recognize the existence of a continuum from relatively higher ambient O_3 concentrations and conditions, in areas with sensitive species and public welfare significance, for which there might be general agreement that effects on public welfare are likely to occur, through lower concentrations at which the degree to which public welfare might be expected to be affected becomes increasingly uncertain.

The evidence base for this review, summarized in section IV.B below, includes quantitative information across a broad array of vegetation effects (e.g., growth impairment during seedling, sapling and mature tree growth stages, visible foliar injury, and yield loss in annual crops) and across a diverse set of exposure methods from laboratory and field studies. While considering the full breadth of information available, we place greater weight on U.S. studies due to the often species-, site-, and climate-specific nature of O_3-related vegetation responses, and particularly emphasize those studies that include O_3 exposures that fall within the range of those likely to occur in the ambient air. We additionally recognize differences across different study types in what information they provide (U.S. EPA, 2013a, section 9.2.6). For example, because conditions can be controlled in laboratory studies, responses in such studies may be less variable and smaller differences may be easier to detect. However, the controlled conditions may limit the range of responses or incompletely reflect pollutant bioavailability, so they may not reflect responses that would occur in the natural environment. Alternatively, field data can provide important information for assessments of multiple stressors or where site-specific factors significantly influence exposure. They are also often useful for analyses of larger geographic scales and higher levels of biological organization. However, depending on the type of field study, many field study conditions may not be controlled, which can make variability higher and differences harder to detect. In some field studies (e.g., gradient studies), the presence of confounding factors can also make it difficult to attribute observed effects to specific stressors.

In developing quantitative exposure and risk assessments for this review, summarized in section IV.C below, we have placed greatest emphasis on studies that have evaluated plant response over multiple exposure levels and developed exposure-response (E-R) relationships that

allow the estimation of plant responses over the range of O_3 exposures pertinent to judgments on the current and potential alternative standards. In considering the information from these assessments, we focus particularly on the quantitative risks related to three types of O_3 effects on vegetation and associated ecosystem services: visible foliar injury, biomass loss in trees, and crop yield loss. These risks were assessed in a range of analyses primarily involving national-scale air quality scenarios developed using model adjustments and interpolation methods. We consider particularly the national scale assessments for these scenarios, while recognizing the uncertainties with regard to the conditions they represent.

With regard to the appropriate characterization of exposures associated with ambient O_3 concentrations, as in the 2008 and 1997 reviews, we continue to recognize the relevance of cumulative, seasonal, concentration-weighted exposures for assessing vegetation effects. More specifically, in the 2008 review, the EPA concluded and the CASAC agreed that the W126 cumulative exposure metric was the most appropriate to use to evaluate both the adequacy of the current secondary standard and the appropriateness of any potential revisions. As discussed in section IV.B.1 below, the information available in this review continues to support the use of such a metric and it is used in considering potential public welfare impacts in the sections below.

B. Welfare Effects Information

1. Nature of Effects and Biologically Relevant Exposure Metric

This section describes the nature of O_3-induced welfare effects, including the nature of the exposures that drive the biological and ecological responses (U.S. EPA, 2013a, chapter 9).

Ozone's phytotoxic effects were first identified on grape leaves in a study published in 1958 (Richards et al., 1958). In the almost fifty years that have followed, extensive research has been conducted both in and outside of the U.S. to examine the impacts of O_3 on plants and their

associated ecosystems, since "of the phytotoxic compounds commonly found in the ambient air, O_3 is the most prevalent, impairing crop production and injuring native vegetation and ecosystems more than any other air pollutant" (U.S. EPA, 1989, 1996a). As was established in prior reviews, O_3 can interfere with carbon gain (photosynthesis) and allocation of carbon within the plant. As a result of decreased carbohydrate availability, fewer carbohydrates are available for plant growth, reproduction, and/or yield. For seed-bearing plants, these reproductive effects will culminate in reduced seed production or yield (U.S. EPA, 1996a, pp. 5-28 and 5-29). Recent studies, assessed in the ISA, together with this longstanding and well-established literature on O_3-related vegetation effects, further contribute to the coherence and consistency of the vegetation effects evidence. As described in the ISA, a variety of factors in natural environments can either mitigate or exacerbate predicted O_3-plant interactions and are recognized sources of uncertainty and variability. These include: 1) multiple genetically influenced determinants of O_3 sensitivity; 2) changing sensitivity to O_3 across vegetative growth stages; 3) co-occurring stressors and/or modifying environmental factors (U.S. EPA, 2013a, section 9.4.8).

Among the studies of vegetation effects, the ISA recognizes controlled chamber studies as the best method for isolating or characterizing the role of O_3 in inducing the observed plant effects, and in assessing plant response to O_3 at the finer scales (U.S. EPA, 2013a, sections 9.2 and 9.3). Recent controlled studies have focused on a variety of plant responses to O_3 including the underlying mechanisms governing such responses. These mechanisms include: 1) reduced carbon dioxide uptake due to stomatal closure (U.S. EPA, 2013a, section 9.3.2.1); 2) the upregulation of genes associated with plant defense, signaling, hormone synthesis and secondary metabolism (U.S. EPA, 2013a, section 9.3.3.2); 3) the down regulation of genes related to photosynthesis and general metabolism (U.S. EPA, 2013a, section 9.3.3.2); 4) the loss of carbon

assimilation capacity due to declines in the quantity and activity of key proteins and enzymes (U.S. EPA, 2013a, section 9.3.5.1); and 5) the negative impacts on the efficiency of the photosynthetic light reactions (U.S. EPA, 2013a, section 9.3.5.1). As described in the ISA, these new studies "have increased knowledge of the molecular, biochemical and cellular mechanisms occurring in plants in response to O_3", adding "to the understanding of the basic biology of how plants are affected by oxidative stress…" (U.S. EPA, 2013a, p. 9-11). The ISA further concludes that controlled studies "have clearly shown that exposure to O_3 is causally linked to visible foliar injury, decreased photosynthesis, changes in reproduction, and decreased growth" in many species of vegetation (U.S. EPA, 2013a, p. 1-15).

Such effects at the plant scale can also be linked to an array of effects at larger spatial scales. For example, recent field studies at larger spatial scales, together with previously available evidence, support the controlled exposure study results and indicate that "ambient O_3 exposures can affect ecosystem productivity, crop yield, water cycling, and ecosystem community composition" (U.S. EPA, 2013a, p. 1-15; Chapter 9, section 9.4). The current body of O_3 welfare effects evidence confirms the conclusions reached in the last review on the nature of O_3-induced welfare effects and is summarized in the ISA as follows (U.S. EPA, 2013a, p. 1-8).

> The welfare effects of O_3 can be observed across spatial scales, starting at the subcellular and cellular level, then the whole plant and finally, ecosystem-level processes. Ozone effects at small spatial scales, such as the leaf of an individual plant, can result in effects along a continuum of larger spatial scales. These effects include altered rates of leaf gas exchange, growth, and reproduction at the individual plant level, and can result in broad changes in ecosystems, such as productivity, carbon storage, water cycling, nutrient cycling, and community composition.

Based on its assessment of this extensive body of science, the ISA determines that, with respect to vegetation and ecosystems, a causal relationship exists between exposure to O_3 in

ambient air and visible foliar injury effects on vegetation, reduced vegetation growth, reduced productivity in terrestrial ecosystems, reduced yield and quality of agricultural crops and alteration of below-ground biogeochemical cycles[181] (U.S. EPA, 2013a, Table 1-2). In consideration of the evidence of O_3 exposure and alterations in stomatal performance, "which may affect plant and stand transpiration and therefore possibly affecting hydrological cycling," the ISA concludes that "[a]lthough the direction of the response differed among studies," the evidence is sufficient to conclude a likely causal relationship between O_3 exposure and the alteration of ecosystem water cycling (U.S. EPA, 2013a, section 2.6.3). The ISA also concludes that the evidence is sufficient to conclude a likely causal relationship between O_3 exposure and the alteration of community composition of some terrestrial ecosystems (U.S. EPA, 2013a, section 2.6.5). Related to the effects on vegetation growth, productivity and, to some extent, below-ground biogeochemical cycles, the ISA additionally determines that a likely causal relationship exists between exposures to O_3 in ambient air and reduced carbon sequestration (also termed carbon storage)[182] in terrestrial ecosystems (U.S. EPA, 2013a, p. 1-10 and section 2.6.2). Modeling studies available in this review consistently found negative impacts of O_3 on carbon sequestration, although the severity of impact was influenced by "multiple interactions of biological and environmental factors" (U.S. EPA, 2013a, p. 2-39).

The ISA notes that "[t]he suppression of ecosystem [carbon] sinks results in more [carbon dioxide] accumulation in the atmosphere" and that a recent study has suggested that "the

[181] Based on studies focused on O_3-associated alterations in quality and quantity of carbon input to soil, microbial community composition, and carbon and nutrient cycling, the ISA concludes that the evidence is sufficient "to infer that there is a causal relationship between O_3 exposure and the alteration of below-ground biogeochemical cycles" (U.S. EPA, 2013a, pp. 2-41 to 2-42).
[182] The terms sequestration and storage are used somewhat interchangeably in the ISA and other documents in this review.

indirect radiative forcing caused by O_3 exposure through lowering the ecosystem [carbon] sink could have an even greater impact on global warming than the direct radiative forcing of O_3" (U.S. EPA, 2013a, p. 2-39). With regard to direct radiative forcing, however, the ISA makes a stronger causality conclusion that the evidence supports a causal relationship between changes in tropospheric O_3 concentrations and radiative forcing[183] (U.S. EPA, 2013a, section 2.7.1). There are, however, "large uncertainties in the magnitude of the radiative forcing estimate attributed to tropospheric O_3, making the impact of tropospheric O_3 on climate more uncertain than the effect of the longer-lived greenhouse gases" (U.S. EPA, 2013a, p. 2-47). In this regard, the ISA observes that "radiative forcing does not take into account the climate feedbacks that could amplify or dampen the actual surface temperature response," that "[q]uantifying the change in surface temperature requires a complex climate simulation in which all important feedbacks and interactions are accounted for" and that "[t]he modeled surface temperature response to a given radiative forcing is highly uncertain and can vary greatly among models and from region to region within the same model" (U.S. EPA, 2013a, p. 2-47). Even with these uncertainties, the ISA notes that "global climate models indicate that tropospheric O_3 has contributed to observed changes in global mean and regional surface temperatures" and as a result of such evidence presented in climate modeling studies, concludes that there is likely to be a causal relationship between changes in tropospheric O_3 concentrations and effects on climate (U.S. EPA, 2013a, p. 2-47). The ISA additionally notes, however, that "[i]mportant uncertainties remain regarding the effect of tropospheric O_3 on future climate change" (U.S. EPA, 2013a, p. 10-31).

[183] Radiative forcing by a greenhouse gas or aerosol is a metric used to quantify the change in balance between radiation coming into and going out of the atmosphere caused by the presence of that substance. For example, a reduction in outgoing infrared radiation has been associated with O_3 by satellite data (U.S. EPA, 2013a, p. 2-47).

Given the strong evidence base, and findings of causal or likely causal relationships with O_3 in ambient air, including the quantitative assessments of relationships between O_3 exposure and occurrence and magnitude of effects, we give a primary focus to three main areas of effects. The three main areas, for which the evidence is summarized in more detail below, are: 1) impacts on tree growth, productivity and carbon storage (section IV.B.1.b); 2) crop yield loss (section IV.B.1.c); and 3) visible foliar injury (section IV.B.1.a). Consideration of these three areas includes, as appropriate, consideration of evidence of associated effects at larger scales, including ecosystems, and on associated ecosystem services.

With regard to biologically based indices of exposure pertinent to O_3 effects on vegetation, the ISA states the following (U.S. EPA, 2013a, p. 2-44).

> The main conclusions from the 1996 and 2006 O_3 AQCDs [Air Quality Criteria Documents] regarding indices based on ambient exposure remain valid. These key conclusions can be restated as follows: ozone effects in plants are cumulative; higher O_3 concentrations appear to be more important than lower concentrations in eliciting a response; plant sensitivity to O_3 varies with time of day and plant development stage; [and] quantifying exposure with indices that cumulate hourly O_3 concentrations and preferentially weight the higher concentrations improves the explanatory power of exposure/response models for growth and yield, over using indices based on mean and peak exposure values.

The long-standing body of available evidence upon which these conclusions are based provides a wealth of information on aspects of O_3 exposure that are important in influencing plant response. Specifically, a variety of "factors with known or suspected bearing on the exposure-response relationship, including concentration, time of day, respite time, frequency of peak occurrence, plant phenology, predisposition, etc.," have been identified (U.S. EPA, 2013a, section 9.5.2). In addition, the importance of the duration of the exposure and the relatively greater importance of higher concentrations over lower concentrations in determining plant response to O_3 have been consistently well documented (U.S. EPA, 2013a, section 9.5.3). Much

of this evidence was assessed in the 1996 AQCD (U.S. EPA, 1996a), while more recent work substantiating this evidence is assessed in the subsequent 2006 AQCD and 2013 ISA.

Understanding of the biological basis for plant response to O_3 exposure led to the development of a large number of "mathematical approaches for summarizing ambient air quality information in biologically meaningful forms for O_3 vegetation effects assessment purposes" (U.S. EPA, 2013a, section 9.5.3), including those that cumulate exposures over some specified period while weighting higher concentrations more than lower (U.S. EPA, 2013a, section 9.5.2). As with any summary statistic, these exposure indices retain information on some, but not all, characteristics of the original observations. The 1996 AQCD contained an extensive review of the published literature on different types of exposure-response metrics, including comparisons between metrics, from which the 1996 Staff Paper built its assessment of forms appropriate to consider in the context of the secondary NAAQS review. The result of these assessments was a decision by the EPA to focus on cumulative, concentration-weighted indices, which were recognized as the most appropriate biologically based metrics to consider in this context, with attention given primarily to two cumulative, concentration-weighted index forms: SUM06 and W126.[184]

In both the 1997 and 2008 reviews, the EPA concluded that the risk to vegetation comes primarily from cumulative exposures to O_3 over a season or seasons[185] and focused on metrics

[184]The SUM06 index is a threshold-based approach described as the sum of all hourly O_3 concentrations greater or equal to 0.06 ppm observed during a specified daily and seasonal time window (U.S. EPA, 2013a, section 9.5.2). The W126 index is a non-threshold approach described as the sigmoidally weighted sum of all hourly O_3 concentrations observed during a specified daily and seasonal time window, where each hourly O_3 concentration is given a weight that increases from zero to one with increasing concentration (U.S. EPA, 2013a, section 9.5.2).
[185]In describing the form as "seasonal", the EPA is referring generally to the growing season of O_3-sensitive vegetation, not to the seasons of the year (i.e., spring, summer, fall, winter).

intended to characterize such exposures: SUM06 (61 FR 65716, December 13, 1996) and W126 (72 FR 37818, July 11, 2007) in the 1997 and 2008 reviews, respectively. Although in both reviews the policy decision was made to set the secondary standard to be identical to a revised primary standard (with an 8-hour averaging time), the Administrator, in both cases, also concluded, consistent with CASAC advice, that a cumulative, seasonal index was the most biologically relevant way to relate exposure to plant growth response (62 FR 38856, July 18, 1997; 73 FR 16436, March 27, 2008; 75 FR 2938, January 19, 2010). This approach for characterizing O_3 exposure concentrations that are biologically relevant with regard to potential vegetation effects received strong support from CASAC in the last review and again in this review, including strong support for use of such a metric as the form for the secondary standard (Henderson, 2006, 2008; Samet, 2010; Frey, 2014c).

An alternative to using ambient exposure durations and concentrations to predict plant response has been developed in recent years, primarily in Europe, i.e., flux models. While "some researchers have claimed that using flux models can be used *{sic}* to better predict vegetation responses to O_3 than exposure-based approaches" because flux models estimate the ambient O_3 concentration that actually enters the leaf (i.e., flux or deposition) (U.S. EPA, 2013a, p. 9-114), it is important to note that "[f]lux calculations are data intensive and must be carefully implemented" (U.S. EPA, 2013a, p. 9-114). Further, the ISA states, "[t]his uptake-based approach to quantify the vegetation impact of O_3 requires inclusion of those factors that control the diurnal and seasonal O_3 flux to vegetation (e.g., climate patterns, species and/or vegetation-type factors and site-specific factors)" (U.S. EPA, 2013a, p. 9-114). In addition to these data requirements, each species has different amounts of internal detoxification potential that may protect species to differing degrees. The lack of detailed species- and site-specific data required

for flux modeling in the U.S. and the lack of understanding of detoxification processes have continued to make this technique less viable for use in vulnerability and risk assessments at the national scale in the U.S. (U.S. EPA, 2013a, section 9.5.4).

Therefore, consistent with the ISA conclusions regarding the appropriateness of considering cumulative exposure indices that preferentially weight higher concentrations over lower for predicting O_3 effects of concern based on the long-established conclusions and long-standing supporting evidence described above, and in light of continued CASAC support, we continue to focus on cumulative concentration-weighted indices as the most biologically relevant metrics for consideration of O_3 exposures eliciting vegetation-related effects. Such a metric has an "explanatory power" that is improved "over using indices based on mean and peak exposure values" (U.S. EPA, 2013a, section 2.6.6.1, p. 2-44). In this review as in the last review, we use the W126 cumulative, seasonal metric (U.S. EPA, 2013a, sections 2.6.6.1 and 9.5.2) for consideration of the effects evidence and in the exposure and risk analyses in the WREA.

The subsections below summarize key aspects of the welfare effects information for O_3-elicited visible foliar injury (section IV.B.1.a), effects on forest tree growth, productivity and carbon storage (section IV.B.1.b) and reductions in crop yield (section IV.B.1.c), as well as associated effects.

a. Visible Foliar Injury

Visible foliar injury resulting from exposure to O_3 has been well characterized and documented over several decades of research on many tree, shrub, herbaceous, and crop species (U.S. EPA, 2013a, p. 1-10; U.S. EPA, 2006a, 1996a, 1986, 1978). Additionally, O_3-induced visible foliar injury symptoms on certain plant species, such as black cherry, yellow-poplar and common milkweed, are considered diagnostic of exposure to O_3 based on the consistent

association established with experimental evidence (U.S. EPA, 2013a, p. 1-10). The significance of O_3 injury at the leaf and whole plant levels depends on an array of factors, and therefore, it is difficult to quantitatively relate visible foliar injury symptoms to vegetation effects such as individual tree growth, or effects at population or ecosystem levels (U.S. EPA, 2013a, p. 9-39). The ISA notes that visible foliar injury "is not always a reliable indicator of other negative effects on vegetation" (U.S. EPA, 2013a, p. 9-39). Factors that influence the significance to the leaf and whole plant include the amount of total leaf area affected, age of plant, size, developmental stage, and degree of functional redundancy among the existing leaf area (U.S. EPA, 2013a, section 9.4.2). Visible foliar injury by itself is an indication of phytotoxicity due to O_3 exposure, which occurs only when sensitive plants are exposed to elevated O_3 concentrations in a predisposing environment, a major aspect of which is the lack of drought conditions during the year such injury is assessed (U.S. EPA, 2013a, section 9.4.2).

Recent research is consistent with previous conclusions and that O_3-induced visible foliar injury symptoms are well characterized and considered diagnostic on certain bioindicator plant species. Diagnostic usage for these plants has been verified experimentally in exposure-response studies, using exposure methodologies such as continuous stirred tank reactors, open-top chambers (OTCs), and free-air carbon dioxide (and ozone) enrichment (FACE). Although there remains a lack of robust exposure-response functions that would allow prediction of visible foliar injury severity and incidence under varying air quality and environmental conditions, "experimental evidence has clearly established a consistent association of the presence of visible foliar injury symptoms with O_3 exposure, with greater exposure often resulting in greater and more prevalent injury" (U.S. EPA, 2013a, section 9.4.2, p. 9-41). The research newly available in this review includes: 1) controlled exposure studies conducted to test and verify the O_3

sensitivity and response of potential new bioindicator plant species; 2) multi-year field surveys in several National Wildlife Refuges (NWR) documenting the presence of foliar injury in valued areas; and 3) ongoing data collection and assessment by the U.S. Forest Service's Forest Health Monitoring Forest Inventory and Analysis (USFS FHM/FIA) program, including multi-year trend analysis (U.S. EPA, 2013a, section 9.4.2). These recent studies, in combination with the entire body of available evidence, thus form the basis for the ISA determinations of a causal relationship between ambient O_3 exposure and the occurrence of O_3-induced visible foliar injury on sensitive vegetation across the U.S. (U.S. EPA, 2013a, p. 9-42).

Recently available evidence confirms the evidence available in previous reviews that visible foliar injury can occur when sensitive plants are exposed to elevated O_3 concentrations in a predisposing environment (i.e., adequate soil moisture) (U.S. EPA, 2013a, section 9.4.2). Recent evidence also continues to support previous findings that indicated the occurrence of visible foliar injury at cumulative ambient O_3 exposures previously examined.

With regard to evidence from controlled exposure studies, a recent study, using continuously stirred tank reactor chambers, evaluated the occurrence of O_3 characteristic visible foliar injury symptoms on 28 species of plants that were suspected of being O_3 sensitive and most of which grow naturally throughout the northeast and midwest U.S., including in national parks and wilderness areas (U.S. EPA, 2013a, section 9.4.2.1; Kline et al., 2008). Across the 28 tested species, the study reported O_3-induced responses in 12, 20, 28 and 28 species at the 30, 60,

90 and 120 ppb exposure concentrations,[186] respectively; the plants were exposed for 7 hours per each weekday over 21 to 29 summer days (Kline et al., 2008).

A string of recently published multi-year field studies provide a complementary line of field-based evidence by documenting the incidence of visible foliar injury symptoms on a variety of O_3-sensitive species over multiple years and across a range of cumulative, seasonal exposure values in several eastern and midwestern NWRs (U.S. EPA, 2013a, section 9.4.2.1; Davis and Orendovici, 2006; Davis, 2007a, b; Davis, 2009). Some of these studies also included information regarding soil moisture stress using the Palmer Drought Severity Index (PDSI). While environmental conditions and species varied across the four NWRs, visible foliar injury was documented to a varying degree at each site.

By far the most extensive field-based dataset of visible foliar injury incidence is that obtained by the USFS FHM/FIA biomonitoring network program. A trend analysis of data from the sites located in the Northeast and North Central U.S. for the 16 year period from 1994 through 2009 (Smith, 2012) describes evidence of visible foliar injury occurrence in the field as well as some insight into the influence of changes in air quality and soil moisture on visible foliar injury and the difficulty inherent in predicting foliar injury response under different air quality/soil moisture scenarios (Smith, 2012; U.S. EPA, 2013a, section 9.2.4.1). Study results showed that incidence and severity of foliar injury were dependent on local site conditions for soil moisture availability and O_3 exposure. Overall, there was a declining trend in the incidence of visible foliar injury as peak O_3 concentrations declined, although the study additionally

[186] Two of the target exposure levels, 30 and 60 ppb, fall below the level of the current standard (75 ppb), although the exposures were average concentrations for 7-hour exposures across durations shorter than a month. Because the form of the current standard targets peak concentrations in a season, an area that just meets the current standard can be expected to have mean concentrations well below that level due to variability in ambient O_3 concentrations.

indicated that moderate O_3 exposures continued to cause visible foliar injury at sites throughout the region (U.S. EPA, 2013a, p. 9-40). In a similar assessment of the USFS FHM/FIA data in the West, six years (2000 to 2005) of biomonitoring data, during a period where a large proportion of California sites did not meet the current standard, indicated O_3-related visible foliar injury in 25-37% of biosites in California (Campbell et al., 2007; U.S. EPA, 2013a, section 9.4.2.1).[187] These recent studies provide additional evidence of O_3-induced visible foliar injury in many areas across the U.S. and augment the EPA's understanding of O_3-related visible foliar injury and of factors, such as soil moisture, that influence associations between O_3 exposures or concentrations and visible foliar injury.

b. Effects on Forest Tree Growth, Productivity and Carbon Storage

Ozone has been shown to affect a number of important U.S. tree species with respect to growth, productivity, and carbon storage. Ambient O_3 concentrations have long been known to cause decreases in photosynthetic rates and plant growth. As discussed in the ISA, research published since the 2006 AQCD substantiates prior conclusions regarding O_3-related effects on forest tree growth, productivity and carbon storage. The ISA states, "previous O_3 AQCDs concluded that there is strong evidence that exposure to O_3 decreases photosynthesis and growth in numerous plant species" and that "[s]tudies published since the 2008 review support those conclusions" (U.S. EPA, 2013a, p. 9-42). The available studies come from a variety of different study types that cover an array of different species, effects endpoints, levels of biological organization and exposure methods and durations. The O_3-induced effects at the plant scale may translate to the ecosystem scale, with changes in productivity and carbon storage. As stated in the

[187] See: http://www.epa.gov/airtrends/values.html.

ISA, "[s]tudies conducted during the past four decades have demonstrated unequivocally that O_3 alters biomass allocation and plant reproduction" (U.S. EPA, 2013a, p. 1-10).

The previously available strong evidence for trees includes robust E-R functions for seedling relative biomass loss (RBL)[188] in 11 species developed under the National Health and Environmental Effects Research Laboratory-Western Ecology Division program. This series of experiments used OTCs to study seedling growth response for a single growing season under a variety of O_3 exposures (ranging from near background to well above current ambient concentrations) and growing conditions (U.S. EPA, 2013a, section 9.6.2; Lee and Hogsett, 1996). The evidence from these studies shows that there is a wide range in sensitivity across the studied species in the seedling growth stage over the course of a single growing season, with some species being extremely sensitive and others being very insensitive over the range of cumulative O_3 exposures studied (U.S. EPA, 2014c, Figure 5-1). At the other end of the organizational spectrum, field-based studies of species growing in natural stands have compared observed plant response across a number of different sites and/or years when exposed to varying ambient O_3 exposure conditions. For example, a study conducted in forest stands in the southern Appalachian Mountains during a period when O_3 concentrations exceeded the current standard found that the cumulative effects of O_3 decreased seasonal stem growth (measured as a change in circumference) by 30-50 percent for most of the examined tree species (i.e., tulip poplar, black cherry, red maple, sugar maple) in a high O_3 year in comparison to a low O_3 year (U.S. EPA, 2013a, section 9.4.3.1; McLaughlin et al., 2007a). The study also reported that high ambient O_3

[188] These functions for RBL estimate reduction in a year's growth as a percentage of that expected in the absence of O_3 (U.S. EPA, 2013a, section 9.6.2; U.S. EPA, 2014b, section 6.2).

concentrations can increase whole-tree water use and in turn reduce late-season streamflow (McLaughlin et al., 2007b; U.S. EPA, 2013a, p. 9-43).

The magnitude of O_3 impact on ecosystem productivity and on forest composition can vary among plant communities based on several factors including: the type of stand or community in which the sensitive species occurs (e.g., single species *versus* mixed canopy), the role or position of the species in the stand (e.g., dominant, sub-dominant, canopy, understory), the sensitivity of co-occurring species and environmental factors (e.g., drought and other factors). For example, O_3 has been found to have little impact on white fir, but to greatly reduce growth of ponderosa pine in southern California, and cause decreased net primary production of most forest types in the Mid-Atlantic region, although only small impacts on spruce-fir forest (U.S. EPA, 2013a, section 9.4.3.4).

As noted above, long-standing evidence has demonstrated that O_3 alters biomass allocation and plant reproduction (U.S. EPA, 2013a, section 9.4.3). Several studies published since the 2006 O_3 AQCD further demonstrate that O_3 can alter reproductive processes in herbaceous and woody plant species, such as the timing of flowering and the number of flowers, fruits and seeds (U.S. EPA, 2013a, section 9.4.3.3). Further, limited evidence in previous reviews reported that vegetation effects from a single year of exposure to elevated O_3 could be observed in the following year. For example, growth affected by a reduction in carbohydrate storage in one year may result in the limitation of growth in the following year. **S**uch "carry-over" effects have been documented in the growth of some tree seedlings and in roots (U.S. EPA, 2013a, section 9.4.8; Andersen, et al., 1997). In the current review, additional field-based evidence expands the EPA's understanding of the consequences of single and multi-year O_3 exposures in subsequent years. A number of studies were conducted at a planted forest at the Aspen FACE

site in Wisconsin. These studies, which occurred in a field setting (more similar to natural forest stands than OTC studies), observed tree growth responses when grown in single or two species stands within 30-m diameter rings and exposed over a period of ten years to existing ambient conditions and elevated O_3 concentrations. Some studies indicate the potential for carry-over effects, such as those showing that the effects of O_3 on birch seeds (reduced weight, germination, and starch levels) could lead to a negative impact on species regeneration in subsequent years, and that the effect of reduced aspen bud size might have been related to the observed delay in spring leaf development. These effects suggest that elevated O_3 exposures have the potential to alter carbon metabolism of overwintering buds, which may have subsequent effects in the following year (Darbah, et al., 2008, 2007; Riikonen et al., 2008; U.S. EPA, 2013a, section 9.4.3). Other studies found that, in addition to affecting tree heights, diameters, and main stem volumes in the aspen community, elevated O_3 over a 7-year study period was reported to increase the rate of conversion from a mixed aspen-birch community to a community dominated by the more tolerant birch, leading the authors to conclude that elevated O_3 may alter intra- and inter-species competition within a forest stand (U.S. EPA, 2013a, section 9.4.3; Kubiske et al., 2006; Kubiske et al., 2007). These studies confirm earlier FACE results of aspen growth reductions from a 6-7 year exposure to elevated O_3 and of cumulative biomass impacts associated with changes in annual production in studied tree communities (U.S. EPA, 2013a, section 9.4.3; King et al., 2005).

In addition to individual studies, recent meta-analyses have quantitatively analyzed the effect of O_3 on trees across large numbers of studies. In particular, a recent meta-analysis of 55 peer reviewed studies from the past 40 years indicates a negative relationship between O_3 concentrations in the northern hemisphere during that period and stomatal conductance and

photosynthesis, which decreases growth (U.S. EPA, 2013a, section 9.4.3.1; Wittig et al., 2007). In this analysis, younger trees (less than 4 years) were affected less by O_3 than older trees (U.S. EPA, 2013a, section 9.4.3.1; Wittig, et al., 2007). A second meta-analysis that quantitatively compiled 263 peer-reviewed studies "demonstrates the coherence of O_3 effects across numerous studies and species that used a variety of experimental techniques, and these results support the conclusion of the previous AQCD that exposure to O_3 decreases plant growth" (U.S. EPA, 2013a, p. 9-43). Other meta-analyses have examined the effect of O_3 exposure on root growth and generally found that O_3 exposure reduced carbon allocated to roots (U.S. EPA, 2013a, pp. 9-45 to 9-46).

As noted above, robust E-R functions have been developed for 11 tree species (black cherry, Douglas fir, loblolly pine, ponderosa pine, quaking aspen, red alder, red maple, sugar maple, tulip poplar, Virginia pine, white pine) from the extensive evidence base of O_3–induced growth effects that was also available and relied upon in the previous review. While the species for which robust E-R functions have been developed represent only a small fraction (0.8 percent) of the total number of native tree species in the contiguous U.S. (1,497), this small subset includes eastern and western species, deciduous and coniferous species, and species that grow in a variety of ecosystems and represent a range of tolerance to O_3 (U.S. EPA, 2013a, section 9.6.2; U.S. EPA, 2014b, section 6.2, Figure 6-2, Table 6-1). Each of these species were studied in OTCs, with most species studied multiple times under a wide range of exposure and/or growing conditions, with separate E-R functions developed for each combination of species, exposure condition and growing condition scenario. These species-specific composite E-R functions have been successfully used to predict the biomass loss response from tree seedling species over a range of cumulative exposure conditions (U.S. EPA, 2013a, section 9.6.2). The 11 robust

composite E-R functions available in the last review, as well as the E-R for eastern cottonwood (derived from a field study in which O_3 and climate conditions were not controlled), are described in the ISA and graphed in the WREA to illustrate the predicted responses of these species over a wide range of cumulative exposures (U.S. EPA, 2014b, section 6.2, Table 6-1 and Figure 6-2; U.S. EPA, 2013a, section 9.6.2). For some of these species, the E-R function is based on a single study (e.g., red maple), while for other species there were as many as 11 studies available (ponderosa pine). In total, the E-R functions developed for these 12 species (the 11 with robust composite E-R functions plus eastern cottonwood) reflect 52 tree seedling studies. A stochastic analysis in WREA, summarized in section IV.C below, indicates the potential for within species variability to contribute appreciably to estimates for each species. Consideration of biomass loss estimates in the PA and in discussions below, however, is based on conventional method and focuses on estimates for the 11 species for which the robust datasets from OTC experiments are available, in consideration of CASAC advice.[189]

c. Crop Yield Loss

The "detrimental effect of O_3 on crop production has been recognized since the 1960s" (U.S. EPA, 2013a, p. 1-10, section 9.4.4). On the whole, the newly available evidence supports previous conclusions that exposure to O_3 decreases growth and yield of crops. The ISA describes average crop yield loss reported across a number of recently published meta-analyses and identifies several new exposure studies that support prior findings for a variety of crops of decreased yield and biomass with increased O_3 exposure (U.S. EPA, 2013a, section 9.4.4.1,

[189] The CASAC cautioned EPA against placing too much emphasis on the eastern cottonwood data, stating that while the cottonwood data are important results, they are not as strong as those from other experiments that developed E-R functions based on controlled O_3 exposure in OTCs; they are from a single gradient study that did not control for O_3 and climatic conditions and they show extreme sensitivity to O_3 compared to other studies (Frey, 2014c, p. 10).

Table 9-17). Studies have also "linked increasing O_3 concentration to decreased photosynthetic rates and accelerated aging in leaves, which are related to yield" and described effects of O_3 on crop quality, such as nutritive quality of grasses, macro- and micronutrient concentrations in fruits and vegetable crops and cotton fiber quality (U.S. EPA, 2013a, p. 1-10, section 9.4.4). The findings of the newly available studies do not change the basic understanding of O_3-related crop yield loss since the last review and little additional information is available in this review on factors that influence associations between O_3 levels and crop yield loss (U.S. EPA, 2013a, section 9.4.4.).

The new evidence has strengthened support for previously established E-R functions for 10 crops (barley, field corn, cotton, kidney bean, lettuce, peanut, potato, grain sorghum, soybean and winter wheat), reducing two important areas of uncertainty, especially for soybean. The established E-R functions were developed from OTC-type experiments (U.S. EPA, 2013a, section 9.6.3; U.S. EPA, 2014b, section 6.2; U.S. EPA, 2014c, Figure 5-4). In this review, the ISA included an analysis comparing OTC data for soybean from the National Crop Loss Assessment Network (NCLAN) with field-based data from SoyFACE (Soybean Free Air Concentration Enrichment) studies (U.S. EPA, 2013a, section 9.6.3.1).[190] Yield loss in soybean from O_3 exposure at the SoyFACE field experiment was reliably predicted by soybean E-R functions developed from NCLAN data, demonstrating a robustness of the E-R functions developed with NCLAN data to predict relative yield loss from O_3 exposure. A second area of

[190] The NCLAN program, which was undertaken in the early to mid-1980s, assessed multiple U.S. crops, locations, and O_3 exposure levels, using consistent methods, to provide the largest, most uniform database on the effects of O_3 on agricultural crop yields (U.S. EPA 1996a; U.S. EPA, 2006a; U.S. EPA, 2013a, sections 9.2, 9.4, and 9.6, Frey, 2014c, p. 9). The SoyFACE experiment was a chamberless (or free-air) field-based exposure study conducted in Illinois from 2001 – 2009 (U.S. EPA, 2013a, section 9.2.4).

uncertainty that was reduced is that regarding the application of the NCLAN E-R functions, developed in the 1980s, to more recent cultivars currently growing in the field. Recent studies, especially those focused on soybean, provide little evidence that crops are becoming more tolerant of O_3 (U.S. EPA, 2006a; U.S. EPA, 2013a). A meta-analysis of 53 studies found consistent deleterious effects of O_3 exposures on soybean from studies published between 1973 and 2001 (Morgan et al., 2003). Further, Betzelberger et al. (2010) utilized the SoyFACE facility to compare the impact of elevated O_3 concentrations across 10 soybean cultivars to investigate intraspecific variability of the O_3 response, finding that the E-R functions derived for these 10 current cultivars were similar to the response functions derived from the NCLAN studies conducted in the 1980s (Heagle, 1989), "suggesting there has not been any selection for increased tolerance to O3 in more recent cultivars" (U.S. EPA, 2013a, p. 9-59). Additionally, the ISA comparisons of NCLAN and SoyFACE data referenced above "confirm that the response of soybean yield to O_3 exposure has not changed in current cultivars" (U.S. EPA, 2013a, p. 9-59; section 9.6.3.1). Thus, the evidence available in the current review has reduced uncertainties in two areas with regard to the use of E-R functions for soybean crop yield loss.

During past O_3 NAAQS reviews, there were very few studies that estimated O_3 impacts on crop yields at large geographical scales (i.e., regional, national or global). Recent modeling studies of the impact of O_3 concentrations historically found that increased O_3 in the past generally reduced crop yield, but the impacts varied across regions and crop species, with the largest O_3-induced crop yield losses estimated to have occurred in high-production areas that had been exposed to elevated O_3 concentrations, such as the Midwest and the Mississippi Valley regions of the U.S. (U.S. EPA, 2013a, Section 9.4.4.1). Among affected crop species, the estimated yield loss for wheat and soybean were higher than rice and maize (i.e., field corn).

Additionally, satellite and ground-based O_3 measurements have assessed soybean yield loss estimated to result from O_3 over the continuous area of Illinois, Iowa, and Wisconsin, finding a relationship which correlates well with the previous results from FACE- and OTC-type experiments (U.S. EPA, 2013a, section 9.4.4.1).

Thus, consistent with the conclusions of the 1996 and 2006 CDs, the current ISA concludes that O_3 concentrations in ambient air can reduce the yield of major commodity crops in the U.S. and focuses on use of crop E-R functions based on OTC experiments to characterize the quantitative relationship between ambient O_3 concentrations and yield loss (U.S. EPA, 2013a, section 9.4.4). In the PA, as summarized in sections IV.D and IV.E below, relative yield loss (RYL) is estimated for 10 different crops using the individual E-R functions described in the WREA[191] (U.S. EPA, 2014b, section 6.2; U.S. EPA, 2014c, section 6.3).

2. Potential Impacts on Public Welfare

The magnitude of a public welfare impact or the degree to which it may be considered adverse is dependent upon the nature and severity of the specific welfare or ecological effect, the use or service (and value) of the affected ecosystem and the relevance and significance of that use[192] to the public welfare. In the preamble of the 2012 final notice of rulemaking on the secondary standards for oxides of nitrogen and sulfur (NOx/SOx), the EPA stated that "[a]n evaluation of adversity to the public welfare might consider the likelihood, type, magnitude, and

[191] These functions for RYL estimate reduction in a year's growth as a percentage of that expected in the absence of O_3 (U.S. EPA, 2013a, section 9.6.2; U.S. EPA, 2014b, section 6.2).
[192] Ecosystem services have been defined as "the benefits that people obtain from ecosystems" (U.S. EPA, 2013a, Preamble, p. 1xxii; UNEP, 2003) and thus are an aspect of the use of a type of vegetation or ecosystem. Similarly, a definition used for the purposes of EPA benefits assessments states that ecological goods and services are the ''outputs of ecological functions or processes that directly or indirectly contribute to social welfare or have the potential to do so in the future" and that "[s]ome outputs may be bought and sold, but most are not marketed'' (U.S. EPA, 2006b).

spatial scale of the effect, as well as the potential for recovery and any uncertainties relating to these conditions" (77 FR 20232, April 3, 2012). The EPA additionally stated that "[c]onceptually, changes in ecosystem services may be used to aid in characterizing a known or anticipated adverse effect to public welfare" (77 FR 20232, April 3, 2012).[193]

Potential public welfare impacts associated with ecosystems and associated services have a range of dimensions, including spatial, temporal, and social, and these likely will vary depending on the type of effect being characterized. For example, ecosystems can cover a range of spatial scales, and the services they provide can accrue locally or be distributed more broadly, such as when crops are sold and eaten locally and/or also sold in regional, national and world markets. Accordingly, impacts can be localized or more widely distributed. Further, ecosystem services can be realized over a range of temporal scales from immediate up to longer term. The size of the societal unit receiving benefits from ecosystem services can also vary dramatically. For example, a national park can provide direct recreational services to the thousands of visitors that come each year, but also provide an indirect value to the millions who may not visit but receive satisfaction from knowing it exists and is preserved for the future (U.S. EPA, 2014b, chapter 5, section 5.5.1).

As recognized in the last review, judgments regarding adverse effects to the public welfare depend on the intended use for and significance of the affected vegetation, ecological

[193] Ecosystem services analyses were one of the tools used in that review to inform the decisions made with regard to adequacy and as such, were used in conjunction with other considerations in the discussion of adversity to public welfare (77 FR 20241).

receptors, ecosystems and resources to the public welfare (73 FR 16496, March 27, 2008).[194] For example, a number of different types of locations provide services of special significance to the public welfare. As emphasized in previous O_3 NAAQS decisions, and summarized in section IV.A above, Class I areas and other parks have been afforded special federal protection to preserve services that provide for the enjoyment of these resources for current and future generations. Surveys have indicated that Americans rank as very important the existence of the resource, the option or availability of the resource and the ability to bequest or pass on to future generations (Cordell *et al*., 2008). These and other services provided by Class I areas and other areas that have been afforded special protection can flow in part or entirely from the vegetation that grows there. Aesthetic value and outdoor recreation depend on the perceived scenic beauty of the environment. Many outdoor recreation activities directly depend on the scenic value of the area, in particular scenic viewing, wildlife-watching, hiking, and camping (U.S. EPA, 2014b, chapters 5 and 7). Further, analyses have reported that the American public values – in monetary as well as nonmonetary ways – the protection of forests from air pollution damage. In fact, studies that have assessed willingness-to-pay for spruce-fir forest protection in the southeastern U.S. from air pollution and insect damage have found that values held by the survey respondents for the more abstract services (existence, option and bequest) were greater than those for recreation or other services (U.S. EPA, 2014b, Table 5-6; Haefele et al., 1991; Holmes and Kramer, 1995).

[194] As noted in section IV.A above, in judgments regarding public welfare significance in the last review, emphasis was placed on vegetation and ecosystem effects to sensitive species that are known to or are likely to occur in federally protected areas such as national parks and other Class I areas, or on lands set aside by states, tribes and public interest groups to provide similar benefits to the public welfare (73 FR 16496, March 27, 2008; 75 FR 3023-24, January 19, 2010).

There are several potential public welfare impacts related to the three main categories of O_3 effects on vegetation (i.e., effects on tree growth, productivity and carbon storage; crop yield loss; and, visible foliar injury, as described in section IV.B.1 above) and their associated ecosystem services. At the same time, these three categories of effects differ with regard to aspects important to judging their public welfare significance. Judgments regarding crop yield loss, for example, depend on considerations related to the heavy management of agriculture in the U.S., while judgments regarding the other categories of effects generally relate to considerations regarding forested areas. For example, while both tree growth-related effects and visible foliar injury have the potential to be significant to the public welfare through impacts in Class I and other protected areas, they differ in how they might be significant and with regard to the clarity of the data which describes the relationship between the effect and the services potentially affected.

With regard to effects on tree growth, reduced growth is associated with effects on an array of ecosystem services including reduced productivity, altered forest and forest community (plant, insect and microbe) composition, reduced carbon storage and altered water cycling (U.S. EPA, 2013a, Figure 9-1, sections 9.4.1.1 and 9.4.1.2; U.S. EPA, 2014b, section 6.1). For example, forest or forest community composition can be affected through O_3 effects on growth and reproductive success of sensitive species in the community, with the extent of compositional changes dependent on factors such as competitive interactions (U.S. EPA, 2013a, sections 9.4.3 and 9.4.3.1). Depending on the type and location of the affected ecosystem, services benefitting the public in other ways can be affected as well. For example, other services valued by people that can be affected by reduced tree growth, productivity and carbon storage include aesthetic value, food, fiber, timber, other forest products, habitat, recreational opportunities, climate and

water regulation, erosion control, air pollution removal, hydrologic and fire regime stabilization (U.S. EPA 2013a, sections 9.4.1.1 and 9.4.1.2; U.S. EPA, 2014b, section 6.1, Figure 6-1, section 6.4, Table 6-13). Further, impacts on some of these services (e.g., forest or forest community composition) may be considered of greater public welfare significance when occurring in Class I or other protected areas.

Consideration of the magnitude of tree seedling growth effects that might cause or contribute to adverse effects for trees, forests, forested ecosystems or the public welfare is complicated by aspects of, or limitations in, the available information. For example, the evidence on tree seedling growth effects, deriving from the E-R functions for 11 species, provides no clear threshold or breakpoint in the response to O_3 exposure. Additionally, there are no established relationships between magnitude of tree seedling growth reduction and forest ecosystem impacts and, as noted in section IV.B.1.b above, other factors can influence the degree to which O_3-induced growth effects in a sensitive species affect forest and forest community composition and other ecosystem service flows from forested ecosystems. These include: 1) the type of stand or community in which the sensitive species is found (i.e., single species versus mixed canopy); 2) the role or position the species has in the stand (i.e., dominant, sub-dominant, canopy, understory); 3) the O_3 sensitivity of the other co-occurring species (O_3 sensitive or tolerant); and 4) environmental factors, such as soil moisture and others. The lack of such established relationships complicates judgments as to the extent to which different amounts of tree seedling growth would be significant to the public welfare and thus an important consideration in the level of protection for the secondary standard.

During the 1997 review of the secondary standard, views related to this issue were provided by a 1996 workshop of 16 then-leading scientists in the context of discussing their

views for a secondary O_3 standard (Heck and Cowling, 1997). In their consideration of tree growth effects as an indicator for forest ecosystems and crop yield reduction as an indicator of agricultural systems, the workshop participants identified annual percentages, of RBL for forest tree seedlings and RYL for agricultural crops, considered important to their judgments on the standard. With regard to forest ecosystems and seedling growth effects as an indicator, the participants selected a range of 1-2% RBL per year "to avoid cumulative effects of yearly reductions of 2%." With regard to crops, they indicated an interest in protecting against crop yield reductions of 5% RYL yet noted uncertainties surrounding such a percentage which led them to identifying 10% RYL for the crop yield endpoint (Heck and Cowling, 1997). The workshop report provides no explicit rationale for the percentages identified (2% RBL and 5% or 10% RYL); nor does it describe their connection to ecosystem impacts of a specific magnitude or type and judgments on significance of the effects for public welfare, e.g., taking into consideration the intended use and significance of the affected vegetation (Heck and Cowling, 1997). In recognition of the complexity of assessing the adversity of tree growth effects and effects on crop yield in the broader context of public welfare, the EPA's consideration of those effects in both the 1997 and 2008 reviews extended beyond the consideration of various benchmark responses for the studied species, and with regard to crops, additionally took note of their extensive management (62 FR 38856, July 18, 1997; 73 FR 16436, March 27, 2008).

While, as noted above, public welfare benefits of forested lands can be particular to the type of area in which the forest occurs, some of the potential public welfare benefits associated with forest ecosystems are not location dependent. A potentially extremely valuable ecosystem service provided by forested lands and for which the ISA concludes a likely causal relationship with O_3 in ambient air is carbon storage, a regulating service that is "of paramount importance

for human society" (U.S. EPA, 2013a, section 2.6.2.1 and p. 9-37). The service of carbon storage is potentially important to the public welfare no matter in what location the sensitive trees are growing, or what their intended current or future use. In other words, the benefit exists as long as the tree is growing, regardless of what additional functions and services it provides.

Another example of locations potentially vulnerable to O_3-related impacts but not necessarily identified for such protection might be forested lands, both public and private, where trees are grown for timber production, particularly where they are dominated by a single timber species stand that is sensitive to O_3, such as ponderosa pine. Further, forests in urbanized areas provide a number of services that are important to the public in those areas, including air pollution removal, cooling of the heat island effect, and beautification (U.S. EPA, 2014b, section 6.6.2 and Appendix 6D; Akbari, 2002).[195] The presence of O_3-sensitive trees in such areas may place them at risk from elevated O_3 exposures, contributing to potential impacts on important services provided by urban forests (U.S. EPA, 2014b, sections 6.6.2 and 6.7). There are many other tree species, such as species used in the USFS biomonitoring network, and various ornamental and agricultural species (i.e., Christmas trees, fruit and nut trees) that provide ecosystem services that may be judged important to the public welfare but whose vulnerability to impacts from O_3 on tree growth, productivity and carbon storage has not been quantitatively characterized (U.S. EPA, 2014b, Chapter 6; Abt Associates, 1995).

As noted above, in addition to tree growth-related effects, O_3-induced visible foliar injury also has the potential to be significant to the public welfare through impacts in Class I and other similarly protected areas. Visible foliar injury is a visible bioindicator of O_3 exposure in species sensitive to this effect, with the injury affecting the physical appearance of the plant.

[195] For example, see http://www.fs.fed.us/research/urban/environmental-justice.php

Accordingly visible foliar injury surveys are used by federal land managers as tools in assessing potential air quality impacts in Class I areas. These surveys may focus on plant species that have been identified as potentially sensitive air quality related values (AQRVs) due to their sensitivity to O_3-induced foliar injury (USFS, NPS, FWS, 2010). An AQRV is defined by the National Park Services as a "resource, as identified by the FLM for one or more Federal areas that may be adversely affected by a change in air quality" and the resource "may include visibility or a specific scenic, cultural, physical, biological, ecological, or recreational resource identified by the FLM for a particular area" (USFS, NPS, USFWS, 2010).[196] No criteria have been established, however, regarding a level or prevalence of visible foliar injury considered to be adverse to the affected vegetation, and, as noted in section IV.B.1.a above, there is not a clear relationship between visible foliar injury and other effects, such as reduced growth and productivity. Thus, key considerations with regard to public welfare significance of this endpoint have related to qualitative consideration of the plant's aesthetic value in protected forested areas. Depending on the extent and severity, O_3-induced visible foliar injury might be expected to have the potential to impact the public welfare in scenic and/or recreational areas during the growing season, particularly in areas with special protection, such as Class I areas.

[196] The identification, monitoring and assessment of AQRVs with regard to an adverse effect is an approach used for assessing the potential for air pollution impacts from pending permit actions in Class I areas (USFS, NPS, USFWS, 2010). An adverse impact is recognized by the National Park Service as one that results in diminishment of the Class I areas's national significance or the impairment of the ecosystem structure or functioning, as well as impairment of the quality of the visitor experience (USFS, NPS, USFWS, 2010). Federal land managers (FLMs) make such adverse impact determinations on a case-by-case basis, using technical and other information which they provide for consideration by permitting authorities. The National Park Services has developed is a document describing an overview of approaches related to assessing projects under the National Environmental Policy Act and other planning initiatives affecting the National Park System (http://www.nature.nps.gov/air/Pubs/pdf/AQGuidance_2011-01-14.pdf).

The ecosystem services most likely to be affected by O_3-induced visible foliar injury (some of which are also recognized above for tree growth-related effects) are cultural services, including aesthetic value and outdoor recreation. In addition, several tribes have indicated that many of the species identified as O_3-sensitive (including bioindicator species) are culturally significant (U.S. EPA, 2014c, Table 5-1). The geographic extent of protected areas that may be vulnerable to such public welfare effects of O_3 is potentially appreciable. Sixty six species that occur on U.S. National Park Service (NPS) and U.S. Fish and Wildlife Service lands[197] have been identified as sensitive to O_3-induced visible foliar injury and some also have particular cultural importance to some tribes (U.S. EPA, 2014c, Table 5-1 and Appendix 5-A; U.S. EPA, 2014b, section 6.4.2). Not all species are equally sensitive to O_3, however, and quantitative relationships between O_3 exposure and other important effects, such as seedling growth reduction, are only available for a subset of the 66, as described in section IV.B.1. above. A diverse array of ecosystem services has been identified for these twelve species (U.S. EPA, 2014c, Table 5-1). Two of the species in this group that are relatively more sensitive with regard to effects on growth are the ponderosa pine and quaking aspen (U.S. EPA, 2014b, section 6.2), the ranges for which overlap with many lands that are protected or preserved for enjoyment of current and future generations (consistent with the discussion above on Class I and other protected areas), including such lands located in the west and southwest regions of the U.S. where ambient O_3 concentrations and associated cumulative seasonal exposures can be highest (U.S. EPA, 2014c, Appendix 2B).[198]

---

[197] See http://www2.nature.nps.gov/air/Pubs/pdf/flag/NPSozonesensppFLAG06.pdf
[198] Basal area for resident species in national forests and parks are available in files accessible at: http://www.fs.fed.us/foresthealth/technology/nidrm2012.shtml

With regard to agriculture-related effects, the EPA has recognized other complexities, stating that the degree to which O_3 impacts on vegetation that could occur in areas and on species that are already heavily managed to obtain a particular output (such as commodity crops or commercial timber production) would impair the intended use at a level that might be judged adverse to the public welfare has been less clear (73 FR 16497, March 27, 2008; 75 FR 3024; January 19, 2010). We note that while having sufficient crop yields is of high public welfare value, important commodity crops are typically heavily managed to produce optimum yields. In light of all of the inputs that go into achieving these yields, such as fertilizer, herbicides, pesticides, and irrigation, it is difficult to determine at what point O_3-induced yield loss creates an adverse impact for the producer in the way of requiring increased inputs in order to maintain the desired yields. Moreover, based on the economic theory of supply and demand, increases in crop yields would be expected to result in lower prices for affected crops and their associated goods, which would primarily benefit consumers. Given these competing impacts on producers and consumers, it is unclear how to consider these effects in terms of potential adversity to the public welfare (U.S. EPA, 2014c, sections 5.3.2 and 5.7).

When agricultural impacts or vegetation effects in other areas are contrasted with the emphasis on forest ecosystem effects in Class I and similarly protected areas, it can be seen that the Administrator has in past reviews judged the significance to the public welfare of O_3-induced effects on sensitive vegetation growing within the U.S. to differ depending on the nature of the effect, the intended use of the sensitive plants or ecosystems, and the types of environments in which the sensitive vegetation and ecosystems are located, with greater significance ascribed to areas identified for specific uses and benefits to the public welfare, such as Class I areas, than to areas for which such uses have not been established. In summary, several considerations are

recognized as important to judgments on the public welfare significance of the array of effects of different O_3 exposure conditions on vegetation. While there are complexities associated with the consideration of the magnitude of key vegetation effects that might be concluded to be adverse to ecosystems and associated services, there are numerous locations where O_3-sensitive tree species are present that may be vulnerable to impacts from O_3 on tree growth, productivity and carbon storage and their associated ecosystems and services. It is not possible to generalize across all studied species regarding which cumulative exposures are of greatest concern, however, as this can vary by situation due to differences in exposed species sensitivity, the importance of the observed or predicted O_3-induced effect, the role that the species plays in the ecosystem, the intended use of the affected species and its associated ecosystem and services, the presence of other co-occurring predisposing or mitigating factors, and associated uncertainties and limitations. These factors contribute to the complexity of the Administrator's judgments regarding the adversity of known and anticipated effects to the public welfare.

C. Exposure and Risk Assessment Information

The WREA characterized ambient O_3 exposure and its relationship to tree biomass loss, crop yield loss, and visible foliar injury and the associated ecosystem services[199] in national-scale and case study analyses. The WREA also qualitatively assessed impacts to some ecosystem services, including impacts on the hydrologic cycle, pollination regulation, and fire regulation; commercial non-timber forest products and insect damage; and aesthetic and non-use values. In the quantitative analyses, the WREA characterized effects associated with exposures to O_3 in ambient air using the W126 metric.

[199] In its review of drafts of the WREA and PA, the CASAC conveyed support for analyses and considerations of ecosystem services that may be affected by O_3 exposures (Frey, 2014b, 2014c).

The following sections summarize the analyses and adjustment approach used to develop the O_3 concentrations used as inputs to the vegetation risk analyses for tree biomass and crop yield loss, and the analyses, including key results and uncertainties, for tree seedling growth, productivity, carbon storage and associated ecosystem services (section IV.C.2); crop yield loss (section IV.C.3); and visible foliar injury (section IV.C.4).

1. Air Quality Analyses

The WREA evaluated O_3 exposure and risks for several national-scale air quality scenarios: recent conditions (2006 to 2008),[200] the current secondary standard, and W126 index values of 15 ppm-hrs, 11 ppm-hrs, and 7 ppm-hrs, using three-year averages (U.S. EPA, 2014b, chapter 4). For each of these scenarios, three-year average W126 index values were estimated at each 12 km by 12 km grid cell in a national-scale spatial surface. Additionally, some analyses were based on single-year surfaces.[201] The method for creating the five scenarios generally involved two steps (summarized in Table 5-4 of the PA). The first is derivation of the average W126 index value (across the three years) at each monitor location. This value is based on unadjusted O_3 concentrations from monitoring data for recent conditions and adjusted concentrations for the four other scenarios. Concentrations were adjusted based on model predicted relationships between O_3 and U.S.-wide emissions reductions in oxides of nitrogen (NOx). The adjusted air quality does not represent an optimized control scenario that just meets the current standard (or target W126 index values for other scenarios), but rather characterizes

[200] Certain visible foliar injury analyses assessed recent conditions from 2006 to 2010 on an annual basis.

[201] An analysis using data from USFS FHM/FIA O_3 biomonitoring sampling sites ("biosites") and a screening-level assessment in 214 national parks were done using national-scale spatial surfaces of unadjusted O_3 concentrations (in terms of the W126 index) created for each year from 2006 through 2010 using the VNA interpolation technique (U.S. EPA, 2014b, section 4.3.2, Appendix 4A).

one potential distribution of air quality across a region when all monitor locations meet the standard (U.S. EPA, 2014b, section 4.3.4.2). The development of adjusted concentrations was done for each of nine regions independently (see U.S. EPA, 2014b, section 4.3.4.1). In the second step, national-scale spatial surfaces (W126 index values for each 12 km x 12 km grid cell used in the air quality model) were created using the monitor-location values and the Voronoi Neighbor Averaging (VNA) spatial interpolation technique (details on the VNA technique are presented in U.S. EPA, 2014b, Appendix 4A).

In the dataset used to create the recent conditions scenario, the three-year average W126 index values at the monitor locations (before application of the VNA technique) ranged from below 5 ppm-hrs to 48.6 ppm-hrs (U.S. EPA, 2014b, Figure 4-4 and Table 4-3). In the nine modeling regions, the maximum three-year average W126 index values at monitor locations ranged from 48.6 ppm-hrs in the West region down to 6.6 ppm-hrs in the Northwest region.[202] After adjustment of the monitor location concentrations to just meet the current standard in each region (using relationships described above), the region-specific maximum three-year average W126 values ranged from 18.9 ppm-hrs in the West region to 2.6 ppm-hrs in the Northeast region (U.S. EPA, 2014b, Table 4-3). With the next step, creation of the national surface of air quality values at grid cell centroids, the highest values were reduced, such that all the three-year average W126 index values were below 15 ppm-hrs across the national surface with the exception of a very small area of the Southwest region (near Phoenix) where average W126 index values were just above 15 ppm-hrs. Thus, it can be seen that application of the VNA

[202] The regions referenced here and also with regard to monitoring data analyses described in section IV.D.4 below are NOAA climate regions, as shown in Figure 2B-1 of the PA.

interpolation method to estimate W126 index values at the centroid of every 12 x 12 km^2 grid cell rather than only at each monitor location results in a lowering of the highest values.

Because the W126 estimates generated for the different air quality scenarios assessed are inputs to the vegetation risk analyses for tree biomass and crop yield loss, and also used in the foliar injury analyses, any uncertainties in the air quality analyses are propagated into the those analyses (U.S. EPA, 2014b, section 8.5). The WREA identified sources of uncertainty for the W126 estimates for each air quality scenario and qualitatively characterized the magnitude of uncertainty and potential for directional bias (U.S. EPA, 2014b, Table 4-5). As discussed in Chapter 4 and 8 of the WREA, an important large uncertainty in the analyses is the assumed response of the W126 concentrations to emissions reductions needed to meet the existing standard (U.S. EPA, 2014b, section 8.5.1). Any approach to characterizing O_3 air quality over broad geographic areas based on concentrations at monitor locations will convey inherent uncertainty. The model-based adjustments are based on U.S.-wide emissions reductions in NOx and characterize only one potential distribution of air quality across a region when all monitor locations meet the standard (U.S. EPA, 2014b, section 4.3.4.2).[203] Additionally, the surface is created from the three-year average at the monitor locations, rather than creating a surface for

[203] The WREA analyses used U.S.-wide NOx emissions reductions to simulate air quality that independently in each region would just meet the existing standard and the three W126 scenarios. The NOx emissions reductions were determined such that the highest monitor within each region would just meet the target level. In this way, the adjustment results in broad regional reductions in O_3 and includes reductions in O_3 at some monitors that were already meeting or below the target level. Thus, the adjustments performed to develop a scenario meeting a target level at the highest monitor in each region did result in substantial reduction below the target level in some areas of the region. This result at the monitors already well below the target indicates an uncertainty with regard to air quality expected from specific control strategies that might be implemented to meet a particular target level.

each year and then averaging across years at each grid cell; the potential impact of this on the resultant estimates is considered in the WREA (U.S. EPA, 2014b, Appendix 4A).

An additional uncertainty related to the W126 index value estimates for each air quality scenario comes from the creation of a national W126 surface using the VNA technique to interpolate recent air quality measurements of O_3. In general, spatial interpolation techniques perform better in areas where the O_3 monitoring network is denser. Therefore, the W126 index values estimated in the rural areas in the West, Northwest, Southwest, and West North Central with few or no monitors (U.S. EPA, 2014b, Figure 2-1) are more uncertain than those estimated for areas with denser monitoring. Further, this interpolation method generally underpredicts higher 12-hour W126 exposures. Due to the important influence of higher exposures in determining risks to plants, the potential for the VNA interpolation approach to underpredict higher W126 exposures could result in an underestimation of risks to vegetation in some areas. Underestimation of the highest W126 index values for the current standard scenario is an additional impact of the interpolation method that is important to consider.

2. Tree Seedling Growth, Productivity, Carbon Storage and Associated Ecosystem Services

For the WREA assessments related to tree growth, productivity, carbon storage and associated ecosystem services, the sections below provide an overview of the analyses along with the key results (section IV.C.2.a) and summarize the key uncertainties (section IV.C.2.b).

a. Overview and Summary of Key Results

The assessments to estimate the exposures and risks for tree seedling growth, productivity, and carbon storage reflect a range of spatial scales ranging from the county scale up to the national park, urban area, and national scales. For the air quality scenarios described above, the WREA applied the species-specific E-R functions to develop estimates of O_3-

associated RBL, productivity, carbon storage and associated ecosystem services (U.S. EPA, 2014b, Chapter 6). Some analyses also apply the median across species E-R functions.

The WREA examined multiple approaches for characterizing the median tree response to O_3 exposure based on the 11 robust E-R functions for tree seedlings from the OTC research and the E-R function for eastern cottonwood (U.S. EPA, 2014b, section 6.2.1.2 and Figure 6-5). For some species, only one study was available (e.g., red maple), and for other species there were as many as 11 studies available (e.g., ponderosa pine). To illustrate the effect of within-species variability associated with the E-R data available on estimates for a median response across the 12 species, the WREA performed a stochastic sampling analysis involving multiple iterations of random selection of E-R functions from the studies available for each of the 12 species. This analysis produced median values at each cumulative exposure level that were higher than medians derived by two conventional, deterministic methods (U.S. EPA, 2014b, section 6.2.1.2 and Figure 6-5).[204] For example, the median seasonal W126 index value for which a two percent biomass loss is estimated in seedlings for the studied species ranges from approximately 7 ppm-hrs using the conventional methods up to 14 ppm-hrs when derived by the stochastic method. Although the stochastic method provides some illustration of the effect of within–species variability, we focus on the conventional approach that gives equal weight to each studied species, calculating the median response based on the composite E-R functions, consistent with CASAC advice (Frey, 2014b).

The WREA estimates indicate substantial heterogeneity in plant responses to O_3, both within species, between species, and across regions of the U.S. The tree species known to be O_3-

[204] These methods were calculating a median using the composite functions and calculating a median using all tree seedling studies available.

sensitive are different in the eastern and western U.S. and the eastern U.S. has far more such species. Ozone exposure and risk is somewhat easier to assess in the eastern U.S. because of the availability of more data and the greater number of species to analyze. In addition, there are more O_3 monitors in the eastern U.S. but fewer national parks (U.S. EPA, 2014b, chapter 8). In consideration of CASAC advice, the WREA derived RBL and weighted RBL (wRBL) estimates separately with and without the eastern cottonwood. The results summarized here are for the analyses that exclude cottonwood.[205] The WREA reported RBL estimates relative to a benchmark of 2% RBL for tree seedlings, as well as relative to other percent RBL values. The 2% RBL benchmark was considered based on CASAC advice that stated that "focus on a 2% loss level for trees … is appropriate." (Frey, 2014b, p. 6). The main WREA analyses for effects related to tree growth, productivity and carbon storage are summarized below, with the key findings for each.

Relative biomass loss nationally was estimated for each of the 12 studied species from the composite E-R functions for each species described above and information on the distribution of those species across the U.S. (U.S. EPA, 2014b, section 6.2.1.3 and Appendix 6A). As one example of a tree species near the median of the studied species, relative biomass loss estimates (reduced growth) for ponderosa pine in the current standard air quality scenario are below two percent for most areas where this species is found but estimates of RBL for this species in some areas of the southwest fall above two percent biomass loss (U.S. EPA, 2014b,

[205] The CASAC advised that the eastern cottonwood response data "receive too much emphasis" in a draft version of the PA, explaining that these "results are from a gradient study that did not control for ozone and climatic conditions and show extreme sensitivity to ozone compared to other studies" and that "[a]lthough they are important results, they are not as strong as those from other experiments that developed E-R functions based on controlled ozone exposure" (Frey, 2014b, p. 10).

Figure 6-8). Maximum estimates of RBL for all areas where ponderosa pine is found decrease to just over three percent and just over two percent for the 15 and 7 ppm-hrs scenarios, respectively (U.S. EPA, 2014b, Table 6-6).

To provide an indication of ecosystem-level impacts, weighted estimates of RBL (wRBL) were also developed for each grid cell nationwide. This is estimated from the species-specific E-R functions and a weighting approach based on information on prevalence of the studied species across the U.S. (i.e., the proportion of the total basal area modeled by USFS across all species for which data were available). An overall wRBL value for each grid cell is generated by summing the wRBL values for each studied tree species found within that grid cell. The wRBL is intended to be an indication of the potential magnitude of the ecological effect that could occur in some ecosystems. In general, the higher the wRBL is in a given ecosystem, the larger the potential ecological effect. (U.S. EPA, 2014b, section 6.8, Table 6-25).

For the national-scale analysis, the WREA presents the percent of total basal area with wRBL greater than 2%. The estimates for the weighted biomass loss analysis reflecting the 11 tree species with robust E-R functions are as follows (U.S. EPA, 2014b, Table 6-25):

- For the current standard scenario, the percent of total basal area that exceeds a two percent wRBL is 0.2 percent.
- For the W126 scenarios of 15, 11 and 7 ppm-hrs, the percent of total basal area that exceeds a two percent wRBL is 0.2 percent, 0.1 percent, and less than 0.1 percent respectively (U.S. EPA, 2014b, Table 6-25).

In the wRBL analysis for Class I areas, the number of Class I areas with wRBL greater than 2% is estimated for the grid cells located in the 145 of the 156 Class I areas for which data were available (U.S.EPA, 2014b, Table 6-26).

- For the current standard scenario, two of the 145 assessed Class I areas have weighted RBL values above two percent (U.S. EPA, 2014b, Table 6-26).
- For the W126 scenarios of 15, 11 and 7 ppm-hrs, there are two, two and one Class I area with wRBL above two percent, respectively.

In the county analysis, the WREA estimated the number of U.S. counties in which any of the studied tree species is estimated to experience more than two percent RBL, the number of species affected, and the number of counties for which the median of the species-specific functions exceeds two percent RBL. In addition to the estimates based on all 12 studied species and also the 11 species with the exclusion of eastern cottonwood (in response to CASAC advice), additional estimates were developed without black cherry to show contribution of that sensitive species to the multi-species estimates (U.S. EPA, 2014b, Table 6-7).

- In the current standard scenarios, 66% of the 3,109 assessed counties are estimated to have at least one of the 11 species (excluding cottonwood) with an RBL greater than two percent, with three counties having three species exceeding two percent. The median RBL (across the species present) is above two percent in 239 counties. The maximum number of species in any one county with an RBL greater than two percent is three (excluding cottonwood). (U.S. EPA, 2014b, Table 6-7).
- For the 15, 11 and 7 ppm-hrs scenarios, the proportion of 3,109 counties with one or more species with an RBL above two percent decreases to 61 percent, 59 percent, and 58 percent, respectively. For the 7 ppm-hrs scenario, the median RBL is above two percent in six percent of the counties (U.S. EPA, 2014b, Table 6-7).
- The county RBL estimates are appreciably influenced by black cherry, a very sensitive species that is widespread in the Eastern U.S. For 1,805 of the 1,929 counties estimated

to have at least one species with an RBL greater than two percent when air quality is meeting the current standard, only black cherry exceeds this level of RBL. If black cherry is excluded, the median RBL for the 10 remaining species decreases. For the median RBL values, 203 of the 239 counties estimated to have a median RBL above two percent when air quality is meeting the current standard are because of the presence of black cherry (U.S. EPA, 2014b, Table 6-7).

Additionally, the WREA estimated relative yield loss in timber production and associated changes in consumer and producer/farmer economic surplus using E-R functions for tree seedlings to calculate relative yield loss (equivalent to relative biomass loss) across full tree lifespans and through modeling of the resulting market-based welfare effects. Because the forestry and agriculture sectors are related and trade-offs occur between the sectors, the WREA calculated the resulting market-based welfare effects of O_3 exposure in the forestry and agriculture sectors on consumer and producer surplus.[206] Because demand for most forestry and agricultural commodities is not highly responsive to changes in price, producer surplus (i.e., producer gains) often declines. These declines can be more than offset by changes in consumer surplus gains from lower prices, but, in some cases, lower prices reduce producer gains more than can be offset by consumer surplus (U.S. EPA, 2014b, Appendix 6B, Table and B-9).

- In the current standard scenario, estimates of the relative yield loss for timber production are below one percent other than in the Southwest, Southeast, Central, and South regions

[206] The WREA used the Forest and Agricultural Sector Optimization Model with Greenhouse Gases (FASOMGHG). FASOMGHG is a national-scale model that provides a complete representation of the impacts of meeting alternative standards on the U.S. forest and agricultural sectors. FASOMGHG simulates the allocation of land over time to competing activities in both the forest and agricultural sectors. FASOMGHG results include multi-period, multi-commodity results over 60 to 100 years in 5-year time intervals when running the combined forest-agriculture version of the model.

(U.S. EPA, 2014b, section 6.3, Table 6-9) (see U.S. EPA, 2014b, Table 6-8 for clarification on region names). The highest yield loss occurs in upland hardwood forests in the South Central and Southeast regions at over three percent per year and in Corn Belt hardwoods at just over two percent loss per year (U.S. EPA, 2014b, section 6.3, Table 6-9).

- For the 15 and 11 ppm-hrs scenarios, relative yield loss estimates for timber production are above one percent in parts of the Southeast, Central, and South regions and above two percent in parts of the Southeast and Central U.S.
- For the 7 ppm-hrs scenario, relative yield loss estimates for timber production are above one percent in the Southeast and South regions (U.S. EPA, 2014b, section 6.3, Table 6-9).

The WREA also estimated impacts on tree growth and two ecosystem services provided by urban trees: removal of air pollutants and carbon storage. The estimates of the tons of carbon monoxide, nitrogen dioxide, ozone and sulfur dioxide removed are for a 25-year period in five urban case study areas: Baltimore, Syracuse, the Chicago region, Atlanta, and the urban areas of Tennessee (U.S. EPA, 2014b, section 6.7).[207]

- Estimates for all five urban case study areas indicate increased pollutant removal of O_3, nitrogen dioxide, carbon monoxide, and sulfur dioxide in the current standard scenario (U.S. EPA, 2014b, sections 6.7). The results for the 15 ppm-hrs scenario were very similar to those for meeting the current standard. For the 11 and 7 ppm-hrs scenarios, all five case study areas indicate smaller additional increases in air pollutant removal beyond

[207] The WREA used the i-Tree model for the urban case studies. i-Tree is a peer-reviewed suite of software tools provided by USFS.

moving from current conditions to the current standard (U.S. EPA, 2014b, sections 6.7).

The WREA estimated carbon storage related to O_3-induced biomass loss in forests and agricultural crops nationally and also in forests in five urban areas using the FASOMGHG and i-Tree models noted above (U.S. EPA, 2014b, section 6.6). Ozone effects on tree growth affects the climate regulation service provided by ecosystems by reducing carbon sequestration and storage (U.S. EPA, 2013a, section 9.4.3.4; U.S. EPA, 2014b, chapter 6, section 6.6). Because O_3 exposure affects photosynthesis and CO_2 uptake by trees, forests sequester less carbon and thus more carbon stays in the atmosphere. In the model used to calculate national-level impacts to forests and agriculture from O_3-related biomass loss, carbon sequestration reflects carbon in standing (live and dead) trees, forest soils, the forest understory vegetation, forest floor including litter and large woody debris, and wood products both in use and in landfills (U.S. EPA, 2014b, chapter 6, Appendix 6B, section 2.7.1).

- Over 30 years for the national-scale analysis, carbon storage in the forestry sector estimated for the current standard scenario is just over 89,000 million metric tons of CO_2 equivalents ($MMtCO_2e$); this is 11,840 more $MMtCO_2e$ storage associated with the reduced O_3-related growth impact from meeting the current standard as compared with recent conditions.[208] The estimates of carbon storage in the agricultural sector are much smaller (i.e., 8,469 $MMtCO_2e$ for the current standard scenario which is 606 $MMtCO_2e$ more than the recent conditions scenario) (U.S. EPA, 2014b, section 6.6.1 and Appendix 6B). The forestry sector carbon storage estimated for each of the three W126 scenarios is

[208] One $MMtCO_2e$ is equivalent to 208,000 passenger vehicles or the electricity to run 138,000 homes for 1 year as calculated by the EPA Greenhouse Gas Equivalencies Calculator (updated September 2013 and available at http://www.epa.gov/cleanenergy/energy-resources/calculator.html).

just slightly greater than that estimated for the current standard. As a percentage of the current standard estimate, the three scenario estimates are less than 0.1% (13 $MMtCO_2e$), just under 1% (593 $MMtCO_2e$) and under 2% (1,600 $MMtCO_2e$) for the 15, 11 and 7 ppm-hrs scenarios, respectively (U.S. EPA, 2014b, Tables 6-19 and B-10).

- Estimates of the effects of avoided O_3-related biomass loss on carbon sequestration in forests in the five urban area case studies indicate the potential for an increase in carbon sequestration of somewhat more than one $MMtCO_2e$ for the current standard scenario compared to the recent conditions estimate (U.S. EPA, 2014b, section 6.6.2 and Appendix 6D). The additional increases in O_3-related carbon sequestration estimated across the five case studies for the three W126 scenarios are relatively small (U.S. EPA, 2014b, section 6.6.2 and Appendix 6D).

Although not discussed in detail here, the WREA also describes qualitative assessments for some ecosystem services that may be affected by O_3 effects on tree growth and productivity, such as commercial non-timber forest products and recreation (U.S. EPA, 2014b, section 6.4), aesthetic and non-use values (U.S. EPA, 2014b, section 6.4), increased susceptibility to insect attack and fire damage (U.S. EPA, 2014b, sections 5.3 and 5.4, respectively). Other ecological effects that are causally or likely causally associated with O_3 exposure, such as effects on terrestrial productivity, the water cycle, the biogeochemical cycle, and community composition (U.S. EPA, 2013a, Table 9-19), were not quantitatively addressed in the WREA due to a lack of sufficient quantitative information.

b. Key Uncertainties

The WREA identified several key limitations and uncertainties in the biomass loss assessments for trees, which may have a large impact on both overall confidence and confidence

in individual analyses. Key uncertainties that affect the assessment of impacts on ecosystem services at the national and case-study scales, as well as across species, U.S. geographic regions and future years, include those associated with the interpolated and adjusted O_3 concentrations used to estimate W126 exposures in the air quality scenarios, the available seedling E-R functions, combining effects across sensitive species, the effects of compounding over time, and modeling impacts of biomass loss on timber harvesting and urban air pollutant removal.

With regard to the robust seedling E-R functions, the WREA provided some characterization of the variability of individual study results and the impact of that on estimates of W126 index values that might elicit different percentages of biomass loss in tree seedlings (U.S. EPA, 2014b, section 6.2.1.2). Even though the evidence shows that there are additional species affected by O_3-related biomass loss, the WREA only has E-R functions available to quantify this loss for 12 tree species. This limited information only allows a partial characterization of the O_3-related biomass loss impacts in trees associated with recent O_3 index values and with just meeting the existing and potential alternative secondary standards. In addition, there are uncertainties inherent in these E-R functions, including the extrapolation of relative biomass loss rates from tree seedlings to adult trees and information regarding within-species variability. The overall confidence in the E-R function varies by species based on the number of studies available for that species. Some species have low within-species variability (e.g., many agricultural crops) and high seedling/adult comparability (e.g., aspen), while other species do not (e.g., black cherry). The uncertainties in the E-R functions for biomass loss and in the air quality analyses are propagated into the analysis of the impact of biomass loss on ecosystem services, including provisioning and regulating services (U.S. EPA, 2014b, Table 6-27). The WREA characterizes the direction of potential influence of E-R function uncertainty as

unknown, yet its magnitude as high, concluding that further studies are needed to determine how accurately the assessed species reflect the larger suite of O_3-sensitive tree species in the U.S. (U.S. EPA, 2014b, Table 6-27).

Another uncertainty associated with interpretation of the WREA biomass loss-related estimates concerns the potential for underestimation of compounding of growth effects across multiple years of varying concentrations. Though tree biomass loss impacts were estimated using air quality scenarios of three-year average W126 index values, the WREA also conducted an analysis to compare the impact of using a variable compounding rate based on yearly variations in W126 exposures to that of using a W126 index value averaged across three years. The WREA compared the compounded values for an example species occurring in the eastern U.S. and another example species occurring in the western U.S. In both examples, one species (tulip polar and ponderosa pine, respectively) and one climate region where that species occurred (Southeast and Southwest regions, respectively) were chosen and air quality values associated with just meeting the existing standard of 75 ppb were used. Within each region, the WREA analysis used both the W126 index value at each monitor in the region for each year and the three-year average W126 index value using the method described in Chapter 4 of the WREA. The results show that the use of the three-year average W126 index value may underestimate RBL values slightly (U.S. EPA, 2014b, section 6.2.1.4 and Figure 6-14). In both regions, the three-year average W126 index value is sometimes above and sometimes below the individual year W126 index value.

The WREA recognizes uncertainty regarding the extent to which the subset of studied tree species encompass the O_3 sensitive species in the U.S. and the extent to which it represents U.S. vegetation as a whole (U.S. EPA, 2013a, pp. 9-123 to 9-125; U.S. EPA, 2014b, Table 6-27).

There are also uncertainties associated with estimating the national scale ecosystem-level impacts using wRBL. For example the wRBL estimates are likely biased low as there may be other unstudied O_3-sensitive tree species in some areas that are also being affected at those levels, although this analysis does not take into account the effects of competition, which could further affect forest biomass loss.

Uncertainties are recognized in the national-scale analyses of timber production, agricultural harvesting, and carbon sequestration, for which the WREA used the FASOMGHG model. These uncertainties include those associated with the functions for carbon sequestration, the assumptions made regarding proxy species where there are insufficient data, and the non-W126 E-R functions for three crops. The FASOMGHG model does not include agriculture and forestry on public lands, changes in exports due to O_3 into international trade projections, or forest adaptation. Despite the inherent limitations and uncertainties, the WREA concludes that the FASOMGHG model reflects reasonable and appropriate assumptions for a national-scale assessment of changes in the agricultural and forestry sectors due to changes in vegetation biomass associated with O_3 exposure (U.S. EPA, 2014b, sections 6.3, 6.5, 6.6, and 8.5.2, and Table 6-27).

In the case study analyses of five urban areas, the WREA used the i-Tree model, which includes an urban tree inventory for each area and species-specific pollution removal and carbon sequestration functions. However, i-Tree does not account for the potential additional VOC emissions from tree growth, which could contribute to O_3 formation. Uncertainties are also recognized with regard to the base inventory of city trees, the functions used for air pollutant removal and for carbon storage (U.S. EPA, 2014b, sections 6.6.2 and 6.7, and Table 6-27). Despite the inherent limitations and uncertainties, the WREA concludes that the i-Tree model

reflects reasonable and appropriate assumptions for a case study assessment of pollution removal and carbon sequestration for changes in biomass associated with O_3 exposure (U.S. EPA, 2014b, sections 6.6.2, 6.7, and 8.5.2).

3. Crop Yield

Section IV.C.3.a below provides an overview of the assessments performed in the WREA to estimate the exposures and risks for crop yield, as well as the key results. Section IV.C.3.b summarizes the key uncertainties.

a. Overview and Summary of Key Results

The WREA conducted two analyses to estimate O_3 impacts related to crop yield, including annual yield losses estimated for 10 commodity crops grown in the U.S. with E-R functions and how these losses affect producer and consumer economic surpluses (U.S. EPA, 2014b, sections 6.2, 6.5). Summary estimates for crop yield loss related effects in the WREA are presented relative to a 5% yield loss benchmark based on consideration of CASAC's recommendation to consider a benchmark of 5% for median crop yield loss and to consider 5% yield loss for individual crop species. In addition, other benchmarks levels are considered in the WREA (e.g. 10% and 20%).

The WREA derived estimates of crop RYL estimates nationally and in a county-specific analysis. Crop-specific estimates of O_3-related RYL nationally were derived for each of the air quality scenarios from the 10 E-R functions for crops described above combined with information regarding crop distribution (U.S. EPA, 2014b, section 6.5). The WREA also reported crop RYL results at the county-level, as well as the number of crop-producing counties with greater than five percent RYL (U.S. EPA, 2014b, section 6.5.1, Appendix 6B).

- The largest reduction in O_3-induced crop yield loss and yield changes occurs when

moving from the recent conditions scenario to the current standard scenario (U.S. EPA, 2014b, section 6.5). Among the major commercial crops, winter wheat and soybeans are more sensitive to ambient O_3 levels than other crops.

- In the current standard scenario, no counties have RYL estimates at or above 5% (U.S. EPA, 2014b, section 6.5).[209]

The WREA also estimated O_3-related crop impacts on producer and consumer surplus.[210] These are national-scale estimates of the effects of yield loss on agricultural harvesting, which supply provisioning services of food and fiber for each of the air quality scenarios. Overall effect on agricultural yields and producer and consumer surplus depends on (1) the ability of producers/farmers to substitute other crops that are less O_3 sensitive, and (2) the responsiveness, or elasticity, of demand and supply (U.S. EPA, 2014b, section 6.5).

- Estimates of consumer surplus, or consumer gains, were generally higher in the current standard scenario in the agricultural sector because higher productivity under lower O_3 concentrations increased total yields and reduced market prices (U.S. EPA, 2014b, Tables 6-17 and 6-18). Combined gains in producer and consumer surplus for forestry and agriculture were essentially unchanged for the 15 ppm-hrs scenario, but annualized gains increased by $21 million beyond the current standard scenario for the 11 ppm-hrs

[209] In the air quality scenario for the current standard, a monitor that already met the current standard but was located within the same region as another monitor that was above the current standard would have had its concentration adjusted downward. This is due to the fact that concentrations were adjusted independently for each region, applying reductions to all monitors within the region, such that all monitors located within a region meet the standard (U.S. EPA, 2014b, section 4.3.4.2).

[210] Welfare economics focuses on the optimal allocation of resources and goods and how those allocations affect total social welfare. Total welfare is also referred to as economic surplus, which is the overall benefit a society, composed of consumers and producers, receives when a good or service is bought or sold, given a quantity provided and a market price. Economic surplus is divided into two parts: consumer and producer surplus (U.S. EPA, 2014b, p. ES-6).

scenario and $231 million for the 7 ppm-hrs scenario. In some cases, lower prices reduce producer gains more than can be offset by higher yields (U.S. EPA, 2014b, Table 6-18).

- Because demand for most agricultural commodities is not highly responsive to changes in price, producer surplus or producer gains often declined. For agricultural welfare, annualized combined consumer and producer surplus gains were estimated to be $2.6 trillion in 2010 for the current standard scenario (U.S. EPA, 2014b, Table 6-17).

b. Key Uncertainties

The WREA discusses multiple areas of uncertainty associated with the crop yield loss estimates, including those associated with the model-based adjustment methodology as well as those associated with the projection of yield loss using the FASOMGHG model at the estimated O_3 concentrations (U.S. EPA, 2014b, Table 6-27, section 8.5). Because the W126 estimates generated in the air quality analyses are inputs to the vegetation risk analyses for crop yield loss, any uncertainties in the air quality analyses are propagated into the those analyses (U.S. EPA, 2014b, Table 6-27, section 8.5). Therefore, the air quality scenarios in the crop yield analyses have the same uncertainties and limitations as in the biomass loss analyses (summarized above), including those associated with the model-based adjustment methodology (U.S. EPA, 2014b, section 8.5).

4. Visible Foliar Injury

Section IV.C.4.a below provides an overview of the assessment in the WREA of O_3-related visible foliar injury and associated ecosystem services impacts, as well as the key results. Section IV.C.4.b summarizes the key uncertainties.

a. Overview and Summary of Key Results

The WREA presents a number of analyses of O_3-related visible foliar injury and associated ecosystem services impacts (U.S. EPA, 2014b, Chapter 7). An initial analysis using USFS FHM/FIA biosite data included the development of benchmark criteria reflecting different prevalences of visible foliar injury at different W126 exposures and soil moisture conditions. These criteria were then used in a screening-level characterization of the potential risk of foliar injury incidence in 214 national parks and a case study assessment of three national parks, which also provides limited characterization of the associated ecosystem services.

In the biosite data analysis, the WREA used the biomonitoring site data from the USFS FHM/FIA Network (USFS, 2011),[211] associated soil moisture data during the sample years, and national surfaces of ambient air O_3 concentrations based on spatial interpolation of monitoring data from 2006 to 2010 to calculate the proportion of biosites with any visible foliar injury. The proportion of biosites metric is derived by first ordering the data (across biosites and sample years) by W126 index value estimated for that biosite and year. Then for each W126 index value, the proportion of biosites is calculated with any foliar injury for all observations at or below that W126 index value. (U.S. EPA, 2014b, section 7.2). This analysis indicates that the proportion of biosites showing the presence of any foliar injury increases rapidly from zero to about 20 percent at relatively low W126 index values. Specifically: (1) the proportion of biosites exhibiting foliar injury rises rapidly with increasing W126 index values below approximately 10 ppm-hrs (W126 <10.46 ppm-hrs), and (2) there is relatively little change in this proportion with increasing W126 index values above approximately 10 ppm-hrs (W126 >10.46 ppm-hrs). The data for biosites during normal moisture years are very similar to the dataset as a whole, with an overall

[211] Data were not available for several western states (Montana, Idaho, Wyoming, Nevada, Utah, Colorado, Arizona, New Mexico, Oklahoma, and portions of Texas).

proportion of close to 18 percent for presence of any foliar injury. Among the biosites with a relatively wet season, the proportion of biosites showing injury is much higher and the relationship with annual W126 index value is much steeper. Much lower proportions of biosites show injury with relatively dry seasons (U.S. EPA, 2014b, section 7.2.3, Figures 7-10), consistent with the ISA finding that many studies have shown that dry periods tend to decrease the incidence and severity of O_3-induced visible foliar injury (U.S. EPA, 2013a, section 9.4.2). While these analyses indicate the potential for foliar injury to occur under conditions that meet the current standard, the extent of foliar injury that might be expected under such conditions is unclear from these analyses.

The national-scale screening-level assessment in 214 parks employed benchmark criteria developed from the above analysis.[212,213] For example, annual O_3 concentrations corresponding to a W126 index value of 10.46 ppm-hrs represents the O_3 exposure concentration where the slope of exposure-response relationship changes for FHM biosites, with the percentage of biosites showing injury remaining relatively constant for higher W126 index values. The WREA refers to this as the "base scenario" benchmark. The W126 benchmarks across this and the other

[212] The parks assessed in the WREA include lands managed by the NPS in the continental U.S., which includes National Parks, Monuments, Seashores, Scenic Rivers, Historic Parks, Battlefields, Reservations, Recreation Areas, Memorials, Parkways, Military Parks, Preserves, and Scenic Trails.

[213] This analysis considered the approach in Kohut (2007), which assessed the risk of O_3-induced visible foliar injury on O_3 bioindicators (i.e., O_3-sensitive vegetation) in 244 parks managed by the NPS. Consistent with advice from CASAC (Frey and Samet, 2012a), however, the WREA modified the approach used by Kohut (2007) to apply the W126 metric alone. The WREA applied different foliar injury benchmarks in this assessment after further investigation into the benchmarks applied in Kohut (2007), which were derived from biomass loss rather than visible foliar injury. Kohut cited a threshold of 5.9 ppm-hrs for highly sensitive species from Lefohn (1997), which was based on the lowest W126 estimate corresponding to a 10 percent growth loss for black cherry. For soil moisture, Kohut (2007) qualitatively assessed whether there appeared to be an inverse relationship between soil moisture and high O_3 exposure.

four scenarios range from 3.05 ppm-hrs (foliar injury observed at five percent of biosites, normal moisture) up to 24.61 ppm-hrs (foliar injury observed at 10 percent of biosites, dry). For the scenario of 10 percent biosites with injury, W126 index values were approximately 4, 6, and 25 ppm-hrs for wet, normal and dry years, respectively. The national-scale screening-level assessment applied these benchmarks to 42 parks with O_3 monitors and a total of 214 parks with O_3 exposure estimated from the interpolated national O_3 surfaces for individual years from 2006 to 2010 (U.S. EPA, 2014b, Appendix 7A and section 7.3).

- Based on NPS lists, 95 percent of the 214 parks in this screening-level assessment contain at least one vegetation species sensitive to O_3-induced foliar injury (U.S. NPS, 2003, 2006).
- In the current standard scenario, none of the 214 parks had O_3 concentrations estimated to exceed the annual benchmark of a W126 index value above 10.46 ppm-hrs (U.S. EPA, 2014b, section 7.3.3.3).

The case study analyses focused on Great Smoky Mountains National Park (GRSM), Rocky Mountain National Park (ROMO), and Sequoia and Kings Canyon National Parks (SEKI). Information on visitation patterns, recreational activities and visitor expenditures was considered. For example, visitor spending in 2011 exceeded $800 million, $170 million and $97 million dollars in GRSM, ROMO and SEKI, respectively. In each park, the percent cover of species sensitive to foliar injury was estimated and the overlap between recreation areas within the park and elevated W126 concentrations was described. (U.S. EPA, 2014b, section 7.4).

- In the current standard scenario, the three-year average W126 index values were at or below 7 ppm-hrs in all areas of two of the three parks (GRSM and SEKI). Three-year average W126 index values were below 7 ppm-hrs in a little more than half of the area of

the third park (ROMO) and between 7 and 11 ppm-hrs in the remainder of the park (U.S. EPA, 2014b, section 7.4).

- For the 15, 11 and 7 ppm-hrs scenarios, all areas of the three specific national parks evaluated (GRSM, SEKI, and ROMO) had three-year average W126 index values at or below 7 ppm-hrs, well below the 10.46 ppm-hrs benchmark. However, the extent of foliar injury that might be expected under these scenarios is unclear from these analyses.

Although not discussed in detail here, the WREA also describes qualitative assessments for some of the ecosystem services most likely to be affected by O_3-induced foliar injury such as cultural services, including aesthetic value and outdoor recreation. Aesthetic value and outdoor recreation depend on the perceived scenic beauty of the environment. Many outdoor recreation activities directly depend on the scenic value of the area, in particular scenic viewing, wildlife-watching, hiking, and camping. These activities and services are of significant importance to public welfare as they are enjoyed by millions of Americans every year and generate millions of dollars in economic value (U.S. EPA, 2014b, Chapters 5 and 7). Although data are not available to explicitly quantify O_3 effects on ecosystem services, the WREA includes several qualitative analyses.

b. Key Uncertainties

Uncertainties associated with these analyses are discussed in the WREA, sections 7.5 and 8.5.3, and in WREA Table 7-24, and also summarized in the PA (e.g., U.S. EPA, 2014c, section 6.3). As discussed in the WREA (section 8.5.3), evaluating soil moisture is more subjective than evaluating O_3 exposure because of its high spatial and temporal variability within the O_3 season, and there is considerable subjectivity in the categorization of relative drought. The WREA generally concludes that the spatial and temporal resolution for the soil moisture data is likely to

underestimate the potential for foliar injury to occur in some areas. In addition, there is lack of a clear threshold for drought below which visible foliar injury would not occur. In general, low soil moisture reduces the potential for foliar injury, but injury could still occur, and the degree of drought necessary to reduce potential injury is not clear. Studies in the ISA provide additional information regarding the role of soil moisture in influencing visible foliar injury response, (U.S. EPA, 2013a, section 9.4.2). These studies confirm that adequate soil moisture creates an environment conducive to greater visible foliar injury in the presence of O_3 than drier conditions. As stated in the ISA, "[a] major modifying factor for O_3-induced visible foliar injury is the amount of soil moisture available to a plant during the year that the visible foliar injury is being assessed … because lack of soil moisture generally decreases stomatal conductance of plants and, therefore, limits the amount of O_3 entering the leaf that can cause injury" (U.S. EPA, 2013a, p. 9-39). As a result, "many studies have shown that dry periods in local areas tend to decrease the incidence and severity of O_3-induced visible foliar injury; therefore, the incidence of visible foliar injury is not always higher in years and areas with higher O_3, especially with co-occurring drought (Smith, 2012; Smith et al., 2003)" (U.S. EPA, 2013a, p. 9-39). This "…partial 'protection' against the effects of O_3 afforded by drought has been observed in field experiments (Low et al., 2006) and modeled in computer simulations (Broadmeadow and Jackson, 2000)" (U.S. EPA, 2013a, p. 9-87). In considering the extent of any protective role of drought conditions, however, the ISA also notes that other studies have shown that "drought may exacerbate the effects of O_3 on plants (Pollastrini et al., 2010; Grulke et al., 2003)" and that "[t]here is also some evidence that O_3 can predispose plants to drought stress (Maier-Maercker, 1998)". Accordingly, the ISA concludes that "the nature of the response is largely species-

specific and will depend to some extent upon the sequence in which the stressors occur" (U.S. EPA, 2013a, p. 9-87).

Due to the absence of biosite injury data in the Southwest region and limited biosite data in the West and West North Central regions, the W126 benchmarks for foliar injury that the WREA developed and applied in the national park screening assessment may not be applicable to these regions. The WREA applied the benchmarks from the national-scale analysis to a screening-level assessment of 214 national parks and case studies of three national parks. Therefore, uncertainties in the foliar injury benchmarks are propagated into these analyses.

Other uncertainties associated with these analyses include uncertainty associated with our understanding of the number and sensitivity of O_3 sensitive species, uncertainties associated with spatial assignment of foliar injury biosite data to 12 km x 12 km grid cells, and uncertainties associated with O_3 exposure data of vegetation and recreational areas within parks (U.S. EPA, 2014b, Table 7-22).

There are also important uncertainties in the estimated O_3 concentrations for the different air quality scenarios evaluated (U.S. EPA, 2014b, section 8.5), as discussed earlier in this section. These uncertainties only apply to the national park case studies because these are the only foliar injury analyses that rely on the air quality scenarios, but any uncertainties in the air quality analyses are propagated into those analyses. The WREA identifies additional uncertainties that are associated with the national park case studies. Specifically, there is uncertainty inherent in survey estimates of participation rates, visitor spending/economic impacts, and willingness-to-pay. These surveys potentially double-count impacts based on the allocation of expenditures across activities but also potentially exclude other activities with economic value. In general, the national level surveys apply standard approaches, which

minimize potential bias. Other sources of uncertainty are associated with the mapping, including park boundaries, vegetation species cover, and park amenities, such as scenic overlooks and trails. In general, the WREA concludes that there is high confidence in the park mapping (U.S. EPA, 2014b, Table 7-24).

D. Conclusions on Adequacy of the Current Secondary Standard

The initial issue to be addressed in the current review of the secondary O_3 standard is whether, in view of the currently available scientific evidence, exposure and risk information and air quality analyses, discussed in the PA, the existing standard should be revised. In drawing conclusions on adequacy of the current O_3 secondary standard, the Administrator has taken into account both evidence-based and quantitative exposure- and risk-based considerations, and advice from CASAC. Evidence-based considerations draw upon the EPA's assessment and integrated synthesis of the scientific evidence from experimental and field studies evaluating welfare effects related to O_3 exposure, with a focus on policy-relevant considerations, as discussed in the PA. Air quality analyses inform these considerations with regard to cumulative, seasonal exposures occurring in areas of the U.S. that meet the current standard. Exposure- and risk-based considerations draw upon EPA assessments of risk of key welfare effects, including O_3 effects on forest growth, productivity, carbon storage, crop yield and visible foliar injury, expected to occur in model-based scenarios for the current standard, with appropriate consideration of associated uncertainties.

The following sections describe consideration of the evidence and the exposure/risk information in the PA and advice received from CASAC, as well as the comments received from various parties, and the Administrator's proposed conclusions regarding the adequacy of the current secondary standard.

1. Evidence- and Exposure/Risk-Based Considerations in the Policy Assessment

Staff assessments in the PA focus on the policy-relevant aspects of the assessment and integrative synthesis of the currently available welfare effects evidence in the ISA, analyses of air quality relationships with exposure metrics of interest, the exposure and risk assessments in the WREA, comments and advice of CASAC and public comment on drafts of the PA, ISA and WREA. The PA describes evidence- and exposure/risk-based considerations and presents staff conclusions for the Administrator to consider in reaching her proposed decision on the current standard. The focus of the initial PA conclusions is consideration of the question: Does the currently available scientific evidence and exposure/risk information, as reflected in the ISA and WREA, support or call into question the adequacy and/or appropriateness of the protection afforded by the current secondary O_3 standard?

The PA's general approach to informing judgments by the Administrator recognizes that the available welfare effects evidence demonstrates a range of O_3 sensitivity across studied plant species and documents an array of O_3-induced effects that extend from lower to higher levels of biological organization. These effects range from those affecting cell processes and individual plant leaves to effects on the physiology of whole plants, as well as the range from species effects and effects on plant communities to effects on related ecosystem processes and services. Given this evidence, the PA notes that it is not possible to generalize across all studied species regarding which cumulative exposures are of greatest concern, as this can vary by situation due to differences in exposed species sensitivity, the importance of the observed or predicted O_3-induced effect, the role that the species plays in the ecosystem, the intended use of the affected species and its associated ecosystem and services, the presence of other co-occurring predisposing or mitigating factors, and associated uncertainties and limitations. Therefore, in

developing conclusions in the PA, staff takes note of the complexity of judgments to be made by the Administrator regarding the adversity of known and anticipated effects to the public welfare and are mindful that the Administrator's ultimate judgments on the secondary standard will most appropriately reflect an interpretation of the available scientific evidence and exposure/risk information that neither overstates nor understates the strengths and limitations of that evidence and information (U.S. EPA, 2014c, section 5.7).

In considering the estimates of exposures and risks for air quality scenarios assessed in the WREA, the PA: 1) evaluates the weight of the scientific evidence concerning vegetation effects associated with those O_3 exposures; 2) considers the importance, from a public welfare perspective, of the O_3-induced effects on sensitive vegetation and associated ecosystem services that are known or anticipated to occur as a result of exposures in the assessed air quality scenarios; and, 3) recognizes that predictions of effects associated with any given O_3 exposure may be mitigated or exacerbated by actual conditions in the environment (i.e., co-occurring modifying environmental and genetic factors). When considering WREA analyses that involve discrete exposure levels or varying levels of severity of effects, the PA's approach recognizes that the available welfare effects evidence demonstrates a wide range in O_3 sensitivities across studied plant species. The PA additionally considers the uncertainties associated with this information.

As an initial matter, the PA recognizes that the CAA does not require that a secondary standard be protective of all effects associated with a pollutant in the ambient air, but rather those considered adverse to the public welfare (as described in section IV.B.2 above). In considering the extent to which it may be appropriate to consider particular welfare effects adverse, the PA applies a paradigm used in past reviews. As discussed in section IV.B.2 above, this paradigm

recognizes that the significance to the public welfare of O_3-induced effects on sensitive vegetation growing within the U.S. can vary depending on the nature of the effect, the intended use of the sensitive plants or ecosystems, and the types of environments in which the sensitive vegetation and ecosystems are located. Accordingly, any given O_3-related effect on vegetation and ecosystems (e.g., biomass loss, crop yield loss, visible foliar injury) may be judged to have a different degree of impact on the public welfare depending, for example, on whether that effect occurs in a Class I area, a city park, or commercial cropland. In the last review, the Administrator took note of actions taken by Congress to establish public lands that are set aside for specific uses that are intended to provide benefits to the public welfare, including lands that are to be protected so as to conserve the scenic value and the natural vegetation and wildlife within such areas for the enjoyment of future generations (73 FR 16497, March 27, 2008). Such public lands that are protected areas of national interest include national parks and forests, wildlife refuges, and wilderness areas (73 FR 16497, March 27, 2008). The PA notes that effects occurring in such areas would likely have the highest potential for being classified as adverse to the public welfare, given the expectation of preserving these areas to ensure their intended use is met (U.S. EPA, 2014c, section 5.1). In considering uses of vegetation and forested lands, the paradigm also includes consideration of impacts to ecosystem goods and services. In summary, the paradigm considered in the PA, consistent with the discussion in section IV.B.2 above, integrates the concepts of: 1) variability in public welfare significance given intended use and value of the affected entity, such as individual species; 2) relevance of associated ecosystem services to public welfare; and 3) variability in spatial, temporal, and social distribution of ecosystem services associated with known and anticipated welfare effects. Further, the PA

recognizes that there is no bright-line rule delineating the set of conditions or scales at which known or anticipated effects become adverse to public welfare.

With respect to the scientific evidence, the PA takes note of the longstanding evidence base that demonstrates O_3-induced effects that occur across a range of biological and ecological scales of organization, as described in the ISA and summarized in section IV.B.1 above (U.S. EPA, 2013a, p. 1-8). Many of the recent studies evaluated in this review have focused on and further increased our understanding of the molecular, biochemical and physiological mechanisms that explain how plants are affected by O_3 in the absence of other stressors (U.S. EPA, 2013a, section 9.3). These recent studies, in combination with the extensive and long-standing evidence, have further strengthened the coherence and consistency of the entire body of research since the last review. Consistent with conclusions in the 2006 AQCD, the ISA determined that a causal relationship exists between O_3 exposure and visible foliar injury on sensitive vegetation, reduced plant growth, reduced productivity in terrestrial ecosystems, reduced yield and quality of agricultural crops and alteration of below-ground biogeochemical cycles (U.S. EPA, 2013a, Table 1-2 and section 2.6). The relationship between O_3 exposures and reduced carbon sequestration in terrestrial ecosystems, alteration of terrestrial ecosystem water cycling and alteration of terrestrial community composition was concluded to be likely causal (U.S. EPA, 2013a, Table 1-2).

The PA recognizes that consistent with conclusions drawn in the last review, the currently available evidence base also strongly supports that effects on vegetation are attributable to cumulative seasonal O_3 exposures. Moreover, on the basis of the entire body of evidence in this regard, the ISA concludes that "quantifying exposure with indices that cumulate hourly O_3 concentrations and preferentially weight the higher concentrations improves the explanatory

power of exposure/response models for growth and yield, over using indices based on mean and peak exposure values" (U.S. EPA, 2013a, p. 2-44). Accordingly, as in other recent reviews, the evidence continues to provide a strong basis for concluding that it is appropriate to judge impacts of O_3 on vegetation, related effects and services, and the level of public welfare protection achieved, using a cumulative, seasonal exposure metric, such as the W126-based metric. In this review, as in the last review, the CASAC concurs with this conclusion (Frey, 2014c, p. iii). Thus, based on the consistent and well-established evidence described above, the PA concludes that the most appropriate and biologically relevant way to relate O_3 exposure to plant growth, and to determine what would be adequate protection for public welfare effects attributable to the presence of O_3 in the ambient air is to characterize exposures in terms of a cumulative seasonal form, and in particular the W126 metric.

In considering the current standard with regard to protection from the array of O_3-related effects recognized in this review, the PA first considers effects related to forest tree growth, productivity and carbon storage, effects for which the ISA concludes the evidence supports a causal or likely causal relationship with exposures to O_3 in ambient air (U.S. EPA, 2014c, sections 5.2 and 5.7). In so doing, the PA notes that while changes in biomass affect individual tree species, the overall effect on forest ecosystem productivity depends on the composition of forest stands and the relative sensitivity of trees within those stands. In considering the evidence for these effects and the extent to which they might be expected to occur under conditions that meet the current secondary standard, the PA focused particularly on RBL estimates for the 11 species for which robust E-R functions have been developed. The PA recognized that recent studies, such as multiple-year exposures of aspen and birch, have provided additional evidence on tree biomass or growth effects associated with multiple year exposures in the field, including

the potential for cumulative and carry-over effects. For example, findings from these studies indicate that effects of O_3 on birch seeds (reduced weight, germination, and starch levels) could lead to a negative impact on species regeneration in subsequent years and may have the potential to alter carbon metabolism of overwintering buds, potentially affecting growth in the following year. Other studies have reported that multiple-year exposures reduced tree size parameters in an aspen community, and increased the rate of conversion from a mixed aspen-birch community to a community dominated by the more tolerant birch, such that elevated O_3 may alter intra- and inter-species competition within a forest stand (U.S. EPA, 2013a, section 9.4.3; U.S. EPA, 2014c, section 5.2). In giving particular attention to tree seedling biomass loss estimates, the PA notes that CASAC "concurs that biomass loss in trees is a relevant surrogate for damage to tree growth that affects ecosystem services such as habitat provision for wildlife, carbon storage, provision of food and fiber, and pollution removal" (Frey, 2014c, p. 10).

In evaluating the current evidence and exposure/risk information associated with tree growth, productivity and carbon storage, with regard to the adequacy of public welfare protection afforded by the current standard, the PA considers the evidence of vegetation and welfare impacts in areas of the U.S. likely to have met the current standard. With regard to O_3 effects on tree growth, productivity and carbon storage and associated ecosystems and services, the PA focuses on relative biomass loss estimates based on the OTC-based E-R functions, noting that analyses newly performed in this review have reduced the uncertainty associated with using OTC E-R functions to predict tree growth effects in the field (U.S. EPA, 2014c, section 5.2.1; U.S. EPA, 2013a, section 9.6.3.2).

In focusing on RBL estimates, the PA recognized that comparison to an array of benchmarks would be informative to considerations of significance to public welfare. Included in

this array were RBL values of 2% and 6% given emphasis by CASAC (Frey, 2014c). In considering the RBL estimates for different O_3 conditions associated with the current standard, the PA focused first on the median of the species-specific (composite) E-R functions. In so doing, the PA takes note of CASAC's comments that a 6% median RBL is "unacceptably high", and that the 2% median RBL is an important benchmark to consider (Frey, 2014c).[214] Based on the summary of RBL estimates in the PA, the PA notes that the median species RBL estimate is at or below 2% for W126 exposure index values less than or equal to 7 ppm-hrs (U.S. EPA, 2014c, Table 6-1 and Appendix 5C). The median species RBL is at or above 6% for W126 index values of 19 ppm-hrs and higher.

In recognition of the significance of welfare effects in Class I areas, the PA gives appreciable weight to consideration of the occurrence of O_3 concentrations associated with the potential for RBL estimates above benchmarks of interest in Class I areas that meet the current standard. Based on air quality data for the period from 1998 to 2012, the PA focused consideration on 22 Class I areas, in which during one or more three-year periods the air quality met the current standard and the three-year average W126 index value was at or above 15 ppm-hrs (see Table 7 below, drawn from U.S. EPA, 2014c, Table 5-2). Across these 22 Class I areas, the highest single-year W126 index values for these three-year periods ranged from 17.4 to 29.0 ppm-hrs. In 20 of the areas, distributed across eight states (AZ, CA, CO, KY, NM, SD, UT, WY)

[214] The CASAC provided several comments related to 2% RBL for tree seedlings both with regard to its use in summarizing WREA results and with regard to consideration of the potential significance of vegetation effects, as summarized in sections IV.D.2 and IV.E.3. In identifying 2% as an important benchmark, CASAC referenced the 1996 workshop sponsored by the Southern Oxidants Study group at which, as noted in section IV.B.2 above, participants identified annual percentages of tree seedling growth reduction and crop yield loss they considered important to their judgments on a secondary standard. The workshop report provides no explicit rationale for the percentages identified or specification with regard to number or proportion of species for which such percentages should be met (Heck and Cowling, 1997).

and four regions (West, Southwest, West North Central and Central), this range was 19.1 to 29.0 ppm-hrs, exposure values for which the corresponding median species RBL estimates equal or exceed 6%, which CASAC has termed "unacceptably high". Recognizing that in any given year, other environmental factors can influence the extent to which O_3 may have the impact predicted by the E-R functions, the PA looked beyond single year occurrences of such magnitudes of W126 index values. For example, focusing on the highest three-year periods that include these highest annual values for 21 areas, the PA notes that in 10 areas (across five states in the West and Southwest regions), the three-year average W126 values (for the highest three-year period that includes these annual values) are at or above 19 ppm-hrs, ranging up to 22.5 ppm-hrs (for which the median species RBL estimate is above 7%). This indicates that the W126 value above 19 ppm-hrs is not simply a single year in a period of lower years, but that in these cases there were sustained higher values that contributed to a three-year W126 also above 19 ppm-hrs. In terms of the highest three-year values observed (regardless of single-year values), the PA additionally notes that the highest three-year average W126 index value (during periods meeting the current standard) was at or above 19 (ranging up to 22.5 ppm-hrs) in 11 areas, distributed among five states in the West and Southwest regions (U.S. EPA, 2014c, Table 5-2, Appendix 5B).

Table 7. O_3 Concentrations in Class I Areas During Period From 1998 to 2012 that Met the Current Standard and Where Three-year Average W126 Index Value was at or Above 15 ppm-hrs

Class I Area	State / County	Design Value (ppb)*	3-year Average W126 (ppm-hrs)* (# ≥ 19 ppm-hrs, range)	Annual W126 (ppm-hrs)* (# ≥ 19 ppm-hrs, range)	Number of 3-year Periods
Bandelier Wilderness Area [QA, DF, PP]	NM / Sandoval	70-74	15.8-20.8 (2, 20.0-20.8)	12.1-25.3 (4, 19.2-25.3)	8
Bridger Wilderness Area [QA, DF]	WY / Sublette	69-72	15.1-17.4	9.9-19.2 (1, 19.2)	5
Canyonlands National Park [QA, DF, PP,]	UT / San Juan	69-73	15.0-20.5 (2, 19.8-20.5)	9.9-24.8 (5, 19.3-24.8)	9
Carlsbad Caverns National Park [PP]	NM / Eddy	69	15.0-15.3	8.6-26.7 (1, 26.7)	3
Chiricahua National Monument [DF, PP]	AZ / Cochise	69-73	15.7-18.0	13.2-21.6 (2, 19.3-21.6)	7
Grand Canyon National Park [QA, DF, PP]	AZ / Coconino	68-74	15.3-22.2 (7, 19.2-22.2)	11.3-26.7 (7, 19.8-26.7)	12
John Muir Wilderness Area [QA, DF, PP]	CA / Inyo	71-72	16.5-18.6	10.1-25.8 (2, 23.9-25.8)	3
Lassen Volcanic National Park [DF, PP]	CA / Shasta	75	15.3	13.6-18.7	1
Mammoth Cave National Park [BC, C, LP, RM, SM, VP, YP]	KY / Edmonson	74	15.9	12.5-22.5 (1, 22.5)	1
Mesa Verde National Park [DF]	CO / Montezuma	67-73	15.5-21.0 (2, 19.0-21.0)	10.7-23.6 (4, 19.7-23.6)	10
Mokelumne Wilderness Area [DF, PP]	CA / Amador	74	17.6	14.8-22.6 (1, 22.6)	1
Petrified Forest National Park	AZ / Navajo	70	15.7	12.9-19.2 (1, 19.2)	1
Pinnacles National Monument	CA / San Benito	74	15.1	13.1-17.4	1
Rocky Mountain National Park [QA, DF, PP]	CO / Boulder	73-75	15.1-19.3 (1, 19.3)	9.5-25.1 (5, 20.7-25.1)	6
	CO / Larimer	74	15.0-18.3	8.1-25.8 (3, 19.1-25.8)	3
Saguaro National Park [DF, PP]	AZ / Pima	69-74	15.4-18.9	11.0-23.1 (3, 20.0-23.1)	6
Sierra Ancha Wilderness Area [DF, PP]	AZ / Gila	72-75	17.9-22.4 (3, 20.2-22.4)	14.8-27.5 (4, 20.3-27.5)	4
Superstition Wilderness Area [PP]	AZ / Maricopa	75	22.4 (1, 22.4)	14.5-28.6 (2, 27.4-28.6)	1
	AZ / Pinal	73-75	18.7-22.5 (2, 20.8-22.5)	14.8-29.0 (3, 22.6-29.0)	3
Weminuche Wilderness Area [QA, DF, PP]	CO / La Plata	70-74	15.0-19.1 (1, 19.1)	10.9-21.0 (2, 20.8-21.0)	5
West Elk Wilderness Area [QA, DF]	CO / Gunnison	68-73	15.6-20.1 (1, 20.1)	12.9-23.9 (3, 21.1-23.9)	8
Wind Cave National Park [QA, PP]	SD / Custer	70	15.4	12.2-20.6 (1, 20.6)	1
Yosemite National Park [QA, DF, PP]	CA / Tuolumne	73-74	20.7-20.8 (2, 20.7-20.8)	19.7-22.1 (4, 19.7-22.1)	2
Zion National Park [QA, DF, PP]	UT / Washington	70-73	17.8-21.1 (2, 20.3-21.1)	14.9-24.2 (5, 19.3-24.2)	4

*Based on data from http://www.epa.gov/ttn/airs/airsaqs/detaildata/downloadaqsdata.htm. W126 values are truncated after first decimal place.
Superscript letters refer to species present for which E-R functions have been developed. QA=Quaking Aspen, BC=Black Cherry, C=Cottonwood, DF=Douglas Fir, LP=Loblolly Pine, PP=Ponderosa Pine, RM=Red Maple, SM=Sugar Maple, VP=Virginia Pine, YP=Yellow (Tulip) Poplar. Sources include USDA-NRCS (2014,http://plants.usda.gov), USDA-FS (2014, http://www.fs.fed.us/foresthealth/technology/nidrm2012.shtml) UM-CFCWI (2014, http://www.wilderness.net/printFactSheet.cfm?WID=583) and Phillips and Comus (2000).

In considering the data analysis for 22 Class I areas described above, the PA additionally considers the species-specific RBL estimates for quaking aspen and ponderosa pine, two tree species that are found in many of these 22 areas and have a sensitivity to O_3 exposure that places them near the middle of the group for which E-R functions have been established (U.S. EPA, 2014c, sections 5.2 and 5.7). In the Class I areas where ponderosa pine is present, the highest single year W126 index values ranged from 18.7 to 29.0 ppm-hrs and the highest three-year average W126 values in which these single year values were represented ranged from 15 to 22.5 ppm-hrs, with these three-year values above 19 ppm-hrs in eight areas across five states. The ponderosa pine RBL estimates for 29 and 22.5 ppm-hrs are approximately 12% and 9%, respectively (U.S. EPA, 2014c, Appendix 5C). In Class I areas where quaking aspen is present, the highest single year W126 index values ranged from 19.2 to 26.7 ppm-hrs and the highest three-year average W126 values in which these single year values were represented ranged from 15.0 to 22.2 ppm-hrs, with these three-year values above 19 ppm-hrs in eight areas across five states. The quaking aspen RBL estimates for 26.7 and 22.2 ppm-hrs are approximately 16% and 13%, respectively (U.S. EPA, 2014c, Appendix 5C).

The PA describes the above observations, particularly in light of advice from CASAC, summarized in section IV.D.2 below, as evidence of the occurrence in Class I areas during periods where the current standard is met of cumulative seasonal O_3 exposures of a magnitude for which the tree growth impacts indicated by the estimated median species RBL might reasonably be concluded to be important to public welfare (U.S. EPA, 2014c, sections 5.2.1 and 5.7).

In considering the WREA analyses of effects on tree growth and associated ecosystem services in the air quality scenario for the current standard, the PA first takes note of the potential

for the interpolation method used in creating the national surface of O_3 concentrations for the air quality scenarios to underestimate the higher W126 values such that W126-based exposures would be expected to be somewhat higher than those included in each scenario (U.S. EPA, 2014b, pp. 5-31 to 5-32). While recognizing this, the PA considers results of the WREA analyses for the current standard scenario and the 11 species of trees, for which robust E-R functions are available. These results indicate that O_3 can impact growth of these species across the U.S., as well as an array of associated ecosystem services provided by forests, including timber production, carbon storage and air pollution removal (U.S. EPA, 2014b, sections 6.2-6.8; U.S. EPA, 2014c, section 5.2).

With regard to WREA analyses of ecosystem services, the PA notes that the national-scale analysis of O_3 impacts on carbon storage indicates appreciably more storage in the air quality scenario for the current standard (approximately 11,000 $MMtCO_2e$, over 30 years) compared to the scenario for recent, higher O_3 conditions (U.S. EPA, 2014b, Appendix 6B, Table B-10). The PA additionally considers the WREA estimates of tree growth and ecosystem services provided by urban trees over a 25-year period for five urban areas based on case-study scale analyses that quantified the effects of biomass loss on carbon storage and pollution removal (U.S. EPA, 2014b, sections 6.6.2 and 6.7; U.S. EPA, 2014c, sections 5.2 and 5.7). The urban areas included in this analysis represent diverse geography in the Northeast, Southeast, and Central regions, although they do not include an urban area in the western U.S. Estimates of the effects of O_3-related biomass loss on carbon sequestration indicate the potential for an increase of somewhat more than a $MMtCO_2e$ for the current standard scenario as compared to the recent conditions scenario (U.S. EPA, 2014b, section 6.6.2 and Appendix 6D; U.S. EPA, 2014c, sections 5.2 and 5.7). The PA also notes the WREA estimates of increased pollution removal in

the current standard scenario as compared to the scenario for recent conditions (U.S. EPA, 2014b, section 6.6.2; U.S. EPA, 2014c, section 5.2.2).

In considering the significance of these WREA analyses of risks for the associated ecosystem services for timber production, air pollution removal, and carbon sequestration, the PA takes note of the large uncertainties associated with these analyses (see U.S. EPA, 2014b, Table 6-27), and the potential for these findings to underestimate the response at the national scale. While noting the potential usefulness of considering predicted and anticipated impacts to these services in assessing the extent to which the current information supports or calls into question the adequacy of the protection afforded by the current standard, the PA also notes that staff places limited weight on the absolute magnitude of the risk results for these ecosystem service endpoints due to the identification of significant associated uncertainties (U.S. EPA, 2014c, sections 5.2 and 5.7).

In reaching conclusions regarding support for the adequacy of the current secondary standard provided by the currently available information on O_3-induced effects on trees and associated services, the PA takes note of: 1) the robust evidence supporting the causal relationship between cumulative O_3 exposures and effects on tree growth and productivity, and information from model simulations supporting the determination of a likely causal relationships for carbon storage in terrestrial ecosystems (U.S. EPA, 2013a, sections 2.6.2.1 and 9.4.3); 2) the tree seedling E-R functions evidence, which has been strengthened and demonstrates variability in sensitivity to O_3 across species; 3) estimates of median species RBL at or above 6% associated with W126-based exposure levels in several areas when O_3 concentrations were at or below the current standard; 4) growth effects estimates associated with exposure concentrations in several Class I areas based on O_3 concentrations from 1998-2012 that were at or below the current

standard; 5) evidence that impacts from single year exposures can carry over to the subsequent year and/or cumulate over multiple years with repeated annual exposures; 6) evidence from recent mechanistic studies and field based studies that support earlier findings from OTC studies; and 7) WREA analyses indicating that O_3-induced biomass loss can impact ecosystem services provided by forests, including timber production, carbon storage, and air pollution removal, even when air quality is adjusted to just meet the current standard. Given the above, and noting CASAC views (described in section IV.D.2 below), the PA concludes that the current evidence and exposure/risk information call into question the adequacy of public welfare protection afforded by the current standard from the known and anticipated adverse effects associated with O_3-induced impacts on tree growth, productivity and carbon storage, including the associated ecosystem services assessed in this review. Therefore, the PA concludes that it is appropriate to consider revision of the secondary standard to provide increased protection.

With respect to crops, the PA takes note of the extensive and long-standing evidence on the detrimental effect of O_3 on crop production, which continues to be confirmed by newly available evidence (U.S. EPA, 2013a, section 9.4.4; U.S. EPA, 2014c, sections 5.3 and 5.7). The PA additionally notes that recent studies have highlighted the effects of O_3 on crop quality, such as through decreases in the nutritive quality of grasses, and in the macro- and micro-nutrient concentrations in fruits and vegetable crops (U.S. EPA, 2013a, section 9.4.4; U.S. EPA, 2014c, section 5.3). Further, the PA notes that there has been little published evidence that crops are becoming more tolerant of O_3, taking note particularly of the ISA analyses of data from cultivars used in NCLAN studies, and yield data for modern cultivars from SoyFACE which confirm that the average response of soybean yield to O_3 exposure has not changed in current cultivars (U.S. EPA, 2006a; U.S. EPA, 2013a, section 9.6.3; U.S. EPA, 2014c, section 5.3). In consideration of

the currently available evidence for O_3 effects on crops, the PA concludes that the recently available evidence, as assessed in the ISA, continues to support the conclusions of the 1996 and 2006 CDs that ambient O_3 concentrations can reduce the yield of major commodity crops in the U.S, and that the currently available evidence continues to support the use of the E-R functions developed for 10 crops from OTC experiment data. Further, the PA recognizes that important uncertainties have been reduced regarding the exposure-response functions for crop yield loss, especially for soybean, the second-most planted field crop in the U.S.,[215] with the ISA generally reporting consistent results across exposure techniques and across crop varieties (U.S. EPA, 2013a, section 9.6.3.2).

With regard to consideration of the quantitative impacts of O_3 on crop yield, the PA considers RYL estimates for O_3 conditions associated with the current standard. As in the case of the PA considerations of RBL estimates for tree seedlings, the PA recognized CASAC comments, which described greater than 5% RYL for the median crop species as "unacceptably high" and 5% RYL for the median crop species as adverse, while noting the opportunities to alter management of annual crops (Frey, 2014c, pp. iii and 14). The PA notes that staff analyses of recent monitoring data (2009-2011) indicate that O_3 concentrations in multiple agricultural areas in the U.S. that meet the current standard correspond to W126 index levels above 12 ppm-hrs, a value for which soybean RYL estimates are greater than 5%. In particular, the PA notes that while the design values for two counties in the Midwest met the current standard in 2009-2011,

[215] See http://www.ers.usda.gov/topics/crops/soybeans-oil-crops/background.aspx

both had a maximum annual W126 of 19 ppm-hrs (in 2011) for which the soybean annual RYL estimate, based on the E-R function, is 9%.[216]

In considering the evidence and exposure/risk-based information for effects on crops, the PA notes the CASAC comments regarding the use of crop yields as a surrogate for consideration of public welfare impacts, in which it noted that "[c]rops provide food and fiber services to humans" and that "[e]valuation of market-based welfare effects of O_3 exposure in forestry and agricultural sectors is an appropriate approach to take into account damage that is adverse to public welfare" (Frey, 2014c, p. 10; U.S. EPA, 2014c, section 5.7). The PA additionally notes, however, as recognized in section IV.B.2 above that the determination of the point at which O_3-induced crop yield loss becomes adverse to the public welfare is still unclear, given that crops are heavily managed with additional inputs that have their own associated markets and that benefits can be unevenly distributed between producers and consumers. The PA further notes that to the extent protection is provided by the current standard with regard to impacts on trees, protection may also be provided for commodity crops (U.S. EPA, 2014c, sections 5.3 and 5.7).

In reaching conclusions regarding support provided for the adequacy of the current secondary standard by the currently available information on O_3-related crop effects, the PA notes: (1) the support for a causal relationship between cumulative O_3 exposures and effects on crop yields and quality (U.S. EPA, 2013a, section 9.4.4); (2) the evidence supporting E-R functions for 10 crops, which has been strengthened in this review and which demonstrates

[216] The monitoring data reflect observations in locations that meet the current standard. The WREA analysis that assessed crop yield loss used a model-developed air quality scenario to reflect air quality associated with the current standard (as described in section IV.C.1 above). In so doing, adjustments are made to create air quality that meets the standard and when the highest monitor in an area is adjusted downward to meet the standard, concentrations at nearby monitors that already meet the standard are also reduced.

variability in sensitivity to O_3 across species; (3) evidence from recent mechanistic studies and field based studies supporting earlier findings from OTC studies; (4) evidence that crops, and in particular soybean, have not become more tolerant of O_3 (U.S. EPA, 2013a, section 9.6.3, 9.4.4.1); and, (5) WREA analysis results indicating that O_3-induced crop yield loss can impact producer and consumer surpluses and the interaction between agriculture and timber production.

With regard to visible foliar injury, the PA recognizes the long-standing evidence that has established that O_3 causes diagnostic visible injury symptoms on studied bioindicator species and that soil moisture is a major confounding effect that can decrease the incidence and severity of visible foliar injury under dry conditions and vice versa (U.S. EPA, 2014c, sections 5.4 and 5.7). As at the time of the last review, the most extensive dataset regarding visible foliar injury incidence across the U.S. is that collected by the U.S. Forest Service (USFS) Forest Health Monitoring/Forest Inventory and Analysis (FHM/FIA) Program, which has documented incidence of visible foliar injury in both the eastern and western U.S. Evidence available in the current review includes studies using controlled exposures as well as multi-year field surveys. In addition to supporting prior conclusions, the newly available studies also address some uncertainties identified in the last review, such as the influence of soil moisture on visible injury development (U.S. EPA, 2013a, section 9.4.2). As stated in the ISA, "many studies have shown that dry periods in local areas tend to decrease the incidence and severity of O_3-induced visible foliar injury; therefore, the incidence of visible foliar injury is not always higher in years and areas with higher O_3, especially with co-occurring drought" (U.S. EPA, 2013a, p. 9-39). The ISA additionally concludes, however, that "the nature of the response is largely species-specific and will depend to some extent upon the sequence in which the stressors occur" (U.S. EPA, 2013a, p. 9-87). As recognized in the PA, this area of uncertainty complicates characterization of the

potential for visible foliar injury and its severity or extent of occurrence for any given air quality conditions and thus complicates identification of air quality conditions that might be expected to provide a specific level of protection from this effect (U.S. EPA, 2014c, sections 5.4 and 5.7).

Information available in this review indicates the occurrence of visible foliar injury in some Class I areas during times when O_3 concentrations met or would be expected to meet the current standard (U.S. EPA, 2014c, sections 5.4.1 and 5.7). In noting this occurrence in Class I areas, the PA notes it has particular public welfare significance in light of direction from Congress that these areas merit a high level of protection (U.S. EPA, 2014c, sections 5.1, 5.4.1 and 5.7). The PA also notes that visible foliar injury surveys are used by the federal land managers to assess potential O_3 impacts in Class I areas (USFS, NPS, FWS, 2010). Given this focus on visible foliar injury, the PA concludes that such O_3-induced impacts have the potential to impact the public welfare in scenic and/or recreational areas on an annual basis. Visible foliar injury is associated with important cultural and recreational ecosystem services to the public, such as scenic viewing, wildlife-watching, hiking, and camping, that are of significance to the public welfare and enjoyed by millions of Americans every year, generating millions of dollars in economic value (U.S. EPA, 2014b, section 7.1). In addition, several tribes have indicated that many of the O_3-sensitive species (including bioindicator species) are culturally significant (U.S. EPA, 2014c, Table 5-1). With respect to agricultural species, such visible effects of O_3 exposure can affect the market value of certain crops and ornamentals for which leaves are the product, such as spinach (U.S. EPA, 2006a, p. AX-9 -189). The PA additionally notes CASAC comments that "visible foliar injury can impact public welfare by damaging or impairing the intended use or service of a resource", including through "visible damage to ornamental or leafy crops that affects their economic value, yield, or usability; visible damage to plants with special cultural

significance; and visible damage to species occurring in natural settings valued for scenic beauty or recreational appeal" (Frey, 2014c, p. 10).

With regard to the exposure and risk-based information, the PA takes note of the WREA analyses of the nationwide dataset (2006-2010) for USFS/FHM biosites, including the observation that the proportion of biosites with injury varies with soil moisture conditions and O_3 W126 index values (U.S. EPA, 2014b, Chapter 7, Figure 7-10; U.S. EPA, 2014c, section 5.4.2). These analyses indicate that the proportion of biosites showing visible foliar injury incidence increases steeply with W126 index values up to approximately 10 ppm-hrs, with little difference in incidence across higher W126 index levels. The screening-level assessment of national parks indicated that risk of visible foliar injury is likely to be lower in most national parks after simulating just meeting the current standard, although visible foliar injury would likely continue to occur at lower O_3 exposures, including some sensitive species growing in National Parks and other Class I areas that may provide important cultural ecosystem services to the public. The PA also notes the WREA recognition that many of the outdoor recreational activities which directly depend on the scenic value of the area are of significant importance to public welfare as they are enjoyed by millions of Americans every year and generate millions of dollars in economic value (U.S. EPA, 2014b, Chapter 5, Chapter 7).

In reaching conclusions regarding support for the adequacy of the current secondary standard provided by the currently available information on O_3-induced visible foliar injury, the PA took note of: (1) the evidence for many species of native plants, including trees, that have been observed to have visible foliar injury symptoms in both OTC and field settings, some of which have also been identified as bioindicators of O_3 exposure by the USFS; (2) the finding that visible foliar injury incidence can occur at very low cumulative exposures, but due to

confounding by soil moisture and other factors, it is difficult to predictively relate a given O_3 exposure to plant response; (3) information indicating the occurrence of visible foliar injury in some Class I areas under air quality conditions expected to meet the current standard; and, (4) WREA analyses, based on USFS biosite data, indicating a relationship of the proportion of biosites showing visible foliar injury incidence with W126 index values below approximately 10 ppm-hrs (U.S. EPA, 2014c, section 5.7).

The PA additionally recognizes a lack of guidance for federal land managers regarding what spatial scale or degree of severity of visible foliar injury is considered sufficient to trigger protective action for O_3 sensitive AQRVs. Further, there does not appear to be any consensus in the literature in this regard, and CASAC, while identifying benchmarks to consider for percent biomass loss and yield loss for tree seedlings and commodity crops, respectively, did not provide a similar recommendation for this endpoint. Likewise, as in previous reviews, the ISA notes the difficulty in relating visible foliar injury symptoms to other vegetation effects such as individual plant growth, stand growth, or ecosystem characteristics (U.S. EPA, 2013a, section 9.4.2, p. 9-39) and further notes that the full body of evidence indicates that there is wide variability in this endpoint, such that although evidence shows visible foliar injury can occur under very low cumulative O_3 concentrations, "…the degree and extent of visible foliar injury development varies from year to year and site to site…, even among co-members of a population exposed to similar O_3 levels, due to the influence of co-occurring environmental and genetic factors" (U.S. EPA, 2013a, section 9.4.2, p. 9-38).

Given the above, and taking note of CASAC views, the PA recognizes visible foliar injury as an important O_3 effect which, depending on severity and spatial extent, may reasonably be concluded to be of public welfare significance, especially when occurring in nationally

protected areas. While noting the uncertainties associated with describing the potential for visible foliar injury and its severity or extent of occurrence for any given air quality conditions, the PA notes the occurrence of O_3-induced visible foliar injury in areas, including federally protected Class I areas that meet the current standard, and suggests it may be appropriate to consider revising the standard to achieve greater protection, while recognizing that the degree to which O_3-induced visible foliar injury would be judged important and potentially adverse to public welfare is uncertain (U.S. EPA, 2014c, section 5.7).

With regard to other welfare effects, for which the ISA determined a causal or likely causal relationships with O_3 in ambient air, such as alteration of ecosystem water cycling and changes in climate, the PA concludes there are limitations in the available information which affect our ability to consider potential impacts of air quality conditions associated with the current standard.

In reaching conclusions on options for the Administrator's consideration, the PA indicates that the final decision to retain or revise the current secondary O_3 standard is a public welfare policy judgment to be made by the Administrator, based on her judgment as to what level of air quality would be requisite (i.e., neither more nor less stringent than necessary) to protect the public welfare from any known or anticipated adverse effects. This final decision will draw upon the available scientific evidence for O_3-attributable welfare effects and on quantitative analyses of vegetation and ecosystem exposures and associated risks to vegetation, ecosystems and their associated services, and judgments about the appropriate weight to place on the range of uncertainties inherent in the evidence and analyses. In making this decision, the Administrator will need to weigh the importance of these effects and their associated ecosystem services in the overall context of public welfare protection.

Based on the considerations described in the PA and summarized here, the PA concludes that the currently available evidence and exposure/risk information call into question the adequacy of the public welfare protection provided by the current standard and provides support for considering potential alternative standards to achieve increased public welfare protection, especially for sensitive vegetation and ecosystems in federally protected Class I and similarly protected areas. In this conclusion, staff gives particular weight to the evidence indicating the occurrence in Class I areas that meet the current standard of cumulative seasonal O_3 exposures associated with estimates of tree growth impacts of a magnitude that may reasonably be considered important to public welfare.

2. CASAC Advice

Beyond the evidence- and exposure/risk-based considerations in the PA discussed above, the EPA's consideration of the adequacy of the current secondary standard also takes into account the advice and recommendations of CASAC.

In its advice offered in the current review, based on the updated scientific and technical record since the 2008 rulemaking, the CASAC stated that they "support the conclusion in the Second Draft PA that the current secondary standard is not adequate to protect against current and anticipated welfare effects of ozone on vegetation" (Frey, 2014c, p. iii) and that the PA "clearly demonstrates that ozone-induced injury may occur in areas that meet the current standard" (Frey, 2014c, p. 12). The Panel further stated "[w]e support EPA's continued emphasis on Class I and other protected areas" (Frey, 2014c, p. 9). Additionally, the CASAC indicated support for the concept of ecosystem services "as part of the scope of characterizing damage that is adverse to public welfare" and "concurs that trees are important from a public welfare perspective because they provide valued services to humans, including aesthetic value, food,

fiber, timber, other forest products, habitat, recreational opportunities, climate regulation, erosion control, air pollution removal, and hydrologic and fire regime stabilization" (Frey, 2014c, p. 9). Similar to comments from CASAC in the last review, including comments on the proposed reconsideration, the current CASAC also endorsed the PA discussions and conclusions on biologically relevant exposure metrics and the focus on the W126 index accumulated over a 12-hour period (8am – 8pm) over the three-month summation period of a year resulting in the maximum value (Frey, 2014c, p. iii).

In addition, CASAC stated that "relative biomass loss for tree species, crop yield loss, and visible foliar injury are appropriate surrogates for a wide range of damage that is adverse to public welfare" (Frey, 2014c, p. 10). With respect to relative biomass loss for tree species, CASAC states that it is appropriate to "include levels that aim for not greater than 2% RBL for the median tree species" and that a median tree species RBL of 6% is "unacceptably high." With respect to crop yield loss, CASAC points to a benchmark of 5%, stating that a crop RYL for median species over 5% is "unacceptably high" (Frey, 2014c, p. 13).

3. Administrator's Proposed Conclusions on Adequacy of the Current Standard

In considering the adequacy of the current secondary O_3 standard, the Administrator has considered the assessment of the current evidence in the ISA, findings of the WREA, including associated limitations and uncertainties, considerations and staff conclusions and associated rationales presented in the PA, views expressed by CASAC, and public comments. In taking into account the information discussed above with regard to the nature of O_3-related effects on vegetation, the Administrator has taken particular note of: the PA analysis of the magnitude of tree seedling growth effects (biomass loss) estimated for different cumulative, seasonal, concentration-weighted exposures in terms of the W126 metric; the monitoring analysis in the

PA of W126 exposures occurring in locations where the current standard is met, including those locations in Class I areas, and associated estimates of tree seedling growth effects; the analyses in the WREA illustrating the geographic distribution of tree species for which E-R functions are available and relative differences estimated for O_3-related growth impacts across areas of the U.S. for the air quality scenarios, taking into account the identified potential for the WREA's scenario for the current standard to underestimate the highest W126-based O_3 values that would be expected to occur.

As an initial matter, the Administrator recognizes the appropriateness and usefulness of the W126 metric, as described in sections IV.B.1 and IV.D.1 above, in evaluating O_3 exposures of potential concern for vegetation effects. In so doing, the Administrator additionally notes support conveyed by CASAC for such a use for this metric.

With regard to considering the adequacy of public welfare protection provided by the current secondary standard, the Administrator focuses first on welfare effects related to reduced native plant growth and productivity in terrestrial ecosystems, taking note of the ISA conclusion of a causal relationship between O_3 in the ambient air and these effects. In considering the assessment of the information available in this review with regard to O_3 effects on vegetation growth and productivity, the Administrator takes note of the evidence from OTC studies of the effects of O_3 exposure on tree seedling growth that support robust E-R functions for 11 tree seedling species, and the characterization of growth effects across these species for different cumulative seasonal concentration-weighted exposures using the W126 metric. Reductions in growth of sensitive species, as recognized in section IV.B above, have the potential to result in effects on ecosystem productivity, as well as, on forest and forest community composition. The Administrator takes particular note of the evidence, described in section IV.D.1 above, of the

occurrence in Class I areas during periods where the current standard is met of cumulative seasonal O_3 exposures for which median species RBL estimates are of a magnitude that CASAC has termed "unacceptably high." In so doing, the Administrator also takes note of a number of actions taken by Congress to establish public lands that are set aside for specific uses intended to provide benefits to the public welfare, including lands that are to be protected so as to conserve the scenic value and the natural vegetation and wildlife within such areas for the enjoyment of future generations. Such public lands that are protected areas of national interest include national parks and forests, wildlife refuges, and wilderness areas (many of which have been designated Class I areas).[217]

While recognizing the variability in the various environmental factors that can influence the occurrence and severity of the effect of ambient O_3 concentrations on vegetation in different locations, the Administrator concludes that the information referenced above including the currently available, extensive evidence base and also factors affecting the significance of impacts to public welfare, as well as WREA estimates regarding the potential for occurrence of impacts important to public welfare, provides an appropriate basis to inform a conclusion as to whether the current standards provide adequate protection against O_3-related vegetation effects on public welfare. With regard to the results of the monitoring analysis, the Administrator takes note of the PA conclusions that the impacts on tree growth (and the potential for associated ecosystem effects) estimated for W126 values found to occur in Class I areas when meeting the current standard are reasonably concluded to be important from a public welfare standpoint in terms of

[217] As noted in section IV.A above, Congress has established areas such as national parks and wilderness areas with specific purposes including the preservation of the areas for future generations, and has identified many of those areas as Class I areas.

both the magnitude of the vegetation effects and the significance to public welfare of such effects in such areas, calling into question the adequacy of the current secondary standard.

The Administrator also recognizes the causal relationships between O_3 in the ambient air and visible foliar injury, reduced yield and quality of agricultural crops and alteration of below-ground biogeochemical cycles associated with effects on growth and productivity. As to visible foliar injury, the Administrator takes note of the complexities and limitations in the evidence base regarding characterizing air quality conditions with respect to the magnitude and extent of risk for visible foliar injury. She additionally recognizes the challenges of associated judgments with regard to adversity of such effects to public welfare. In taking note of the conclusions with regard to crops, she recognizes the complexity of considering adverse O_3 impacts to public welfare due to the heavy management common for achieving optimum yields and market factors that influence associated services and additionally takes note of the PA conclusions that placing emphasis on the protection afforded to trees inherently also recognizes a level of protection afforded for crops.

Based on her consideration of the conclusions in the PA, and with particular weight given to PA findings pertaining to tree growth-related effects, as well as with consideration of CASAC's conclusion that the current standard is not adequate, the Administrator proposes to conclude that the current standard is not requisite to protect public welfare from known or anticipated effects and that revision is needed to provide increased public welfare protection, especially for sensitive vegetation and ecosystems in federally protected Class I areas and in other areas providing similar public welfare benefits. The Administrator further concludes that the scientific evidence and quantitative analyses on tree growth-related effects provide strong support for consideration of alternative standards that would provide increased public welfare

protection beyond that afforded by the current O_3 secondary standard. She further notes that a revised standard would provide increased protection for other growth-related effects, including for carbon storage and for areas for which it is more difficult to determine public welfare significance, as recognized in section IV.B.2 above, as well other welfare effects of O_3, including visible foliar injury and crop yield loss.

In giving particular focus to tree growth-related effects of O_3 on public welfare, the Administrator additionally recognizes that there are alternative approaches to viewing the evidence and information, including alternative approaches to viewing, evaluating, and weighing important uncertainties. In some cases, these alternative approaches have been expressed by public commenters, leading some public commenters to recommend retaining the current standard. Given these alternative views, in addition to proposing to revise the current secondary standard, the Administrator also solicits comment on the option of retaining the standard without revision.

E. Consideration of Alternative Secondary Standards

Given her proposed conclusion that the current secondary standard is inadequate, the Administrator has then considered what revisions to the standard may be appropriate, focusing on revisions to the key standard elements of indicator, form, averaging time, and level. On the basis of the strength and coherence of the vegetation effects evidence indicating a cumulative, seasonal, concentration-weighted metric as the most appropriate approach for judging potential impacts of and protection from O_3 in ambient air, the Administrator judges that it is appropriate to consider revisions to the secondary standard that reflect this understanding and to use such a metric in identifying an appropriate level of protection and considering the protection afforded by potential alternative standards. The Administrator also judges that the current averaging time

and form may also provide protection to vegetation when set at an appropriate level. Therefore, the Administrator considered whether revision to the level of the current secondary standard might provide sufficient protection to also achieve the level of air quality that is determined requisite to protect the public welfare.

The sections below address the indicator for the secondary standard (section IV.E.1), consideration of a cumulative, seasonal exposure-based standard in the PA (section IV.E.2), CASAC advice and public input (section IV.E.3), analyses of air quality in the PA and subsequent to the PA (section IV.E.4) and the Administrator's proposed conclusions regarding an alternative secondary standard (section IV.E.5)

1. Indicator

In the last review of the air quality for O_3 and other photochemical oxidants and of the O_3 standard, as in other prior reviews, the EPA focused on a standard for O_3 as the most appropriate surrogate for ambient photochemical oxidants. Ozone is a long-established surrogate for ambient photochemical oxidants, among which it is by far the most widely studied with regard to effects on welfare and specifically on vegetation. The information available in this review adds to the understanding of the atmospheric chemistry for photochemical oxidants and O_3 in particular (as described in the ISA, sections 3.2 and 3.6, and summarized in section 2.2 in the PA). The 1996 Staff Paper noted that the database on vegetation effects is generally considered to raise concern at levels found in the ambient air for O_3 and, therefore, control of ambient O_3 levels has previously been concluded to provide the best means of controlling other photochemical oxidants of potential welfare concern (U.S. EPA, 1996b, p. 277). In the current review, while the complex atmospheric chemistry in which O_3 plays a key role has been highlighted, no alternatives to O_3 have been advanced as being a more appropriate surrogate for ambient photochemical oxidants.

Ozone continues to be the only photochemical oxidant (other than nitrogen dioxide) that is routinely monitored and for which a comprehensive database exists (U.S. EPA, 2013a, section 3.6).

Thus, the Administrator concludes that ozone is the appropriate indicator and proposes to continue to use O_3 as indicator for a secondary standard that is intended to address effects associated with exposure to O_3, alone and in combination with related photochemical oxidants. In so doing, the Administrator recognizes that measures leading to reductions in ecosystem exposures to O_3 will also reduce exposures to other photochemical oxidants.

2. Consideration of a Cumulative, Seasonal Exposure-based Standard in the Policy Assessment

In recognition of the extensive evidence supporting a cumulative, seasonal exposure index as a biologically relevant metric for assessing potential for O_3 effects on vegetation, discussed in sections IV.B.1 above, as well as advice from CASAC in the current and last O_3 NAAQS reviews, summarized in sections IV.D.3 above and IV.E.3 below, the PA focused its consideration of alternative standards on a revised secondary standard based on a cumulative, seasonal, concentration-weighted form. The PA considered the currently available information that has been critically analyzed and characterized in the ISA, the risk and exposure information presented in the WREA, and CASAC advice and public comment with regard to support for consideration of options for alternative standards that might be expected to provide increased protection from ambient O_3 exposures over the current standard.

a. Form and Averaging Time

In considering potential forms for a revised secondary standard, the PA considers the characterization of the evidence in the ISA, summarized in section IV.B.1 above, including the ISA conclusion that exposure indices that cumulate and differentially weight the higher hourly

average concentrations over a season and also include the mid-level values, such as the W126 index, offer the most scientifically defensible approach for characterizing vegetation response to ambient O_3 and comparing study findings, as well as for defining indices for vegetation protection (U.S. EPA, 2013a, section 2.6.6.1). The PA additionally considers CASAC advice in the current review, as well as that from the last review, all of which provided support for such a form. Thus, in considering alternative forms of a revised standard, the PA concludes that it is reasonable and appropriate to consider a cumulative, concentration-weighted form to provide protection against cumulative, seasonal exposures to O_3 that are known or anticipated to harm sensitive vegetation or ecosystems. The PA recognizes that such a metric is specifically designed to focus on the kind of O_3 exposures that have been shown to cause harm to vegetation and states that it would have a distinct advantage over the form of the current standard in characterizing air quality conditions potentially of concern for vegetation and in more directly demonstrating that the desired degree of protection against those conditions was being achieved (U.S. EPA, 2014c, sections 6.2 and 6.6).

With regard to the appropriate index for a cumulative seasonal form, the PA considers the evidence and background for a number of different cumulative concentration weighted indices that have been developed and evaluated in the scientific literature and in past NAAQS reviews in terms of their ability to predict vegetation response and their usefulness in the NAAQS context (U.S. EPA, 2006a, pp. 9-11 to 9-15 and pp. AX9-159 to AX9-187; U.S. EPA, 2007, pp. 7-15 to 7-16). While these various forms have different strengths and limitations, the PA notes the ISA conclusion that the W126 index, described in section IV.B.1 above, has some important advantages over other non-sigmoidally weighted cumulative indices, including its lack of a cut-off in its weighting scheme which allows for cumulation of lower O_3 concentrations (U.S. EPA,

2013a, section 9.5; U.S. EPA, 2014c, sections 6.2 and 6.6). Additionally, the W126 metric adds increasing weight to hourly concentrations from about 40 ppb to about 100 ppb, which is an important feature because "as hourly concentrations become higher, they become increasingly likely to overwhelm plant defenses and are known to be more detrimental to vegetation" (U.S. EPA, 2013a, p. 9-104). The PA additionally takes note of CASAC advice in the current and last review that concurred with a focus on the W126 form (Frey, 2014c, p. iii; Henderson, 2006; Samet, 2010). Based on the considerations summarized here, the PA concludes that the W126 index is the most appropriate cumulative seasonal form to consider in the context of the secondary O_3 NAAQS review.

The PA next considers the exposure periods – diurnal and seasonal – over which the W126 index would be summed in any given year. The currently available information continues to provide support for a definition of the diurnal period of interest as the 12-hour period from 8:00 am to 8:00 pm, which the EPA identified in past reviews as appropriately capturing the diurnal window with most relevance to the photosynthetic process (U.S. EPA, 2013a, section 9.5.3; 72 FR 37900, July 11, 2007). The CASAC has generally supported this 12-hour daylight period as well (Frey, 2014c; Henderson, 2006, 2007). Based on these considerations, the PA concludes that the 12-hour daylight window (8:00 am to 8:00 pm) represents the portion of the diurnal exposure period that is most relevant to predicting or inducing plant effects related to photosynthesis and growth and thus is an appropriate diurnal period to use in conjunction with a W126 cumulative metric (U.S. EPA, 2014c, sections 6.2 and 6.6). With regard to a seasonal period of interest, the current evidence base continues to provide support for a seasonal period with a minimum duration of three months, as described more fully in the ISA and considered in the PA (U.S. EPA, 2013a, section 9.5.3; U.S. EPA, 2014c, sections 6.2 and 6.6). The CASAC

has also indicated support for such a three month period (Frey, 2014c; Samet, 2010; Henderson, 2006). The PA thus concludes that it is appropriate to identify the seasonal W126 index value as that derived from the consecutive 3-month period within the O_3 season with the highest W126 index value.

The PA additionally considers the period of time over which a cumulative seasonal W126-based standard should be evaluated, considering the support for both a single year form and a form averaged over three years (U.S. EPA, 2014c, pp. 6-29 through 6-33). The PA considers the evidence of effects associated with single year and multiple year exposures as well as their potential public welfare significance. The PA also considers comments from CASAC, including their comment in the current review that "[t]he CASAC does not recommend the use of a three-year averaging period" and that they "favor a single-year period for determining the highest three-month summation which will provide more protection for annual crops and for the anticipated cumulative effects on perennial species" (Frey, 2014c, p. iii).

The PA considered O_3-induced effects that can occur with a single year's exposure, including visible foliar injury, growth reduction in annual and perennial species and yield loss in annual crops (U.S. EPA, 2014c, section 6.3). While recognizing that there are a number of O_3-induced effects that have the potential for public welfare significance within the annual timeframe, the PA also notes the uncertainties associated with these effects that complicate consideration of the level of appropriate protection on an annual basis for such effects in order to protect the public welfare from known or anticipated adverse effects, and thus recognizes the possibility that a multiple-year form could be considered to provide a more consistent target level of protection for certain effects (U.S. EPA, 2014c, pp. 6-29 to 6-31). With regard to visible foliar injury, the ISA notes that "the degree and extent of visible foliar injury development varies from

year to year and site to site … even among co-members of a population exposed to similar O_3 levels, due to the influence of co-occurring environmental and genetic factors" (U.S. EPA, 2013a, p. 9-38; U.S. EPA, 2014c, p. 6-30). Additionally, the PA takes note of the difficulty and complexity shown by the WREA analyses with regard to identifying W126 index values that would provide consistent protection on an annual basis given likely fluctuations in annual O_3 and soil moisture conditions (U.S. EPA, 2014c, p. 6-30).

The PA additionally notes evidence of some O_3 effects on perennial species that may result from a single season's elevated O_3 exposures, such as reduced bud size or starch content, which may have the potential for some "carry over" of effects on plant growth or reproduction in the subsequent season. Another effect where such potential for "carry over" has been noted with elevated O_3 exposure is reduction in below-ground carbohydrate reserves which can impair growth in subsequent seasons (U.S. EPA, 2014c, pp. 6-30 to 6-31; U.S. EPA, 2013a, pp. 9-43 to 9-44 and p. 9-86). The PA notes that the occurrence of such annual effects of elevated O_3 exposures over multiple years may contribute to a potential to be compounded, increasing the potential for effects at larger scales (e.g., population, ecosystem). In the PA, staff notes that multiple consecutive years of critical O_3 exposures might be expected to result in larger impacts on forested areas than intermittent occurrences of such exposures due to the potential for compounding or carry-over effects on tree growth (U.S. EPA, 2014c, pp. 6-29 to 6-31).

In light of the above summarized considerations for potential compounding of carry-over effects, the PA concludes that the public welfare significance of the effects that can occur as a result of three-year O_3 exposures are potentially greater than those associated with a single year of such exposure. Thus, to the extent that the focus for public welfare protection to be afforded by the secondary O_3 standard is on long-term effects that occur in sensitive tree species in natural

forested ecosystems, including federally protected areas such as Class I areas or on lands set aside by States, Tribes and public interest groups to provide similar benefits to the public welfare, the PA concludes that a standard with a form that evaluates the cumulative seasonal index across multiple years might be considered to provide a more appropriate match to the nature of O_3-related effects on vegetation upon which the secondary O_3 standard is focused. In considering such forms, the PA focuses on one that averages the W126 index values across three years (U.S. EPA, 2014c, section 6.2).

With regard to single-year and three-year forms, the PA considers a WREA analysis that examined the extent to which cumulative RBL across a three-year period might be underestimated when each year's RBL is derived from the three-year average W126 index value versus each single-year W126 index value for each of three years (in which no other influence on plant growth is presumed to change). This analysis indicates that use of the three-year average may lead to an underestimation, although of relatively small magnitude (U.S. EPA, 2014b, section 6.2.1.4). The PA notes that this limited analysis does not account for moisture levels and other environmental factors that could affect plant growth and that vary from year to year. When considering an appropriate level for a form that averages W126 index values across three years, the PA also recognizes the importance of considering the extent to which the cumulative effect of different average W126 exposures across the three-year period would be judged adverse (U.S. EPA, 2014c, p. 6-31).

Although single-year W126 index values were not separately analyzed in the PA analysis of recent monitoring data, the data indicate appreciable variation in cumulative, seasonal O_3 concentrations among monitor locations meeting different levels of a standard of the current form (U.S. EPA 2014c, section 6.Appendix 2B).Therefore, a standard with an annual form

would have the cumulative seasonal index values be at or lower than the level of the standard in all years and, noting the inter-annual observed variability in seasonal W126 index values, could be appreciably below the standard level in some years. For a standard with a form that averages the cumulative seasonal index values across three consecutive years, the annual seasonal index value could be above the level in some years, but would have to be below it in others within the same three-year period, thus restricting the air quality for a given area to have no more than two years out of three with a W126 index value above the standard level, and depending on magnitude of each year's index, potentially having no more than one.

In its consideration of one year as compared to three year forms, the PA also considers implications with regard to stability of air quality programs that implement the NAAQS (U.S. EPA, 2014c, pp. 6-31 to 6-32). The PA notes that a standard based on a single year W126 index would be expected to have a less stability relative to a standard based on a form that averages seasonal indices across three consecutive years, given the potential for large year-to-year variability in annual W126 index values in areas across the country. Thus, a three-year evaluation period can contribute to greater public welfare protection by limiting year-to-year disruptions in ongoing control programs that would occur if an area was frequently shifting in and out of attainment due to extreme year-to-year variations in meteorological conditions. This greater stability in air quality management programs would thus facilitate achievement of the protection intended by a standard. Such considerations of stability often receive particular weight in NAAQS reviews, such as those resulting in selection of the form for the current O_3 primary and secondary standards (62 FR 38856, July 18, 1997), as well as the primary standards for nitrogen dioxide (75 FR 6474, February 9, 2010) and sulfur dioxide (75 FR 35520, June 22,

2010). See also *ATA III*, 283 F. 3d at 374-75 (recognizing programmatic stability as a legitimate consideration in the NAAQS standard-setting process).

Thus, to the extent that emphasis continues to be placed on protecting against effects associated with multi-year exposures and maintaining more year-to-year stability of public welfare protection, the PA concludes that it is appropriate to consider a secondary standard form that is an average of the seasonal W126 index values across three consecutive years. The PA concludes that such a form might be appropriate for a standard intended to achieve the desired level of protection from longer-term effects, including those associated with potential compounding, and that such a form might be concluded to contribute to greater stability in air quality management programs, and thus, greater effectiveness in achieving the desired level of public welfare protection, than that might result from a single year form (U.S. EPA, 2014c, section 6.6).

The PA additionally recognized that to the extent the Administrator finds it useful to consider the public welfare protection that might be afforded by a revised primary standard, this is appropriately judged by evaluating the impact of attainment of such a revised primary standard on O_3 exposures in terms of the cumulative seasonal W126-based exposure index.

b. Level

In considering an appropriate range of levels to consider for a W126-based standard, the PA notes that, due to the variability in the importance of the associated ecosystem services provided by different species at different exposures and in different locations, as well as differences in associated uncertainties and limitations, both the species present and their public welfare significance, in addition to the magnitude of the ambient concentrations, are essential considerations in drawing conclusions regarding the significance or magnitude of public welfare

impact. Therefore, in development of the PA conclusions, staff took note of the complexity of judgments to be made by the Administrator regarding the adversity of known and anticipated effects to the public welfare and recognized that the Administrator's ultimate judgments on the secondary standard will most appropriately reflect an interpretation of the available scientific evidence and exposure/risk information that neither overstates nor understates the strengths and limitations of that evidence and information.

As described in section IV.D.1 above, the PA employed a paradigm, which has evolved over the course of the O_3 and other secondary NAAQS reviews, to assist in putting the available science and exposure/risk information into the public welfare context (U.S. EPA, 2014c, section 5.1). This paradigm recognizes that the significance to the public welfare of O_3-induced effects on sensitive vegetation growing within the U.S. can vary depending on the nature of the effect, the intended use of the sensitive plants or ecosystems, and the types of environments in which the sensitive vegetation and ecosystems are located. Accordingly, any given O_3-related effect on vegetation and ecosystems (e.g., biomass loss, crop yield loss, visible foliar injury) may be judged to have a different degree of impact on or significance to the public welfare depending, for example, on whether that effect occurs in a Class I area, a city park, or commercial cropland. This approach also includes consideration of impacts to ecosystem goods and services, which are an important category of public welfare effects with an obvious relationship to consideration of intended use (73 FR 16492, March 27, 2008).

In considering potential levels for an alternative standard based on the W126 metric, the PA focused primarily on impacts on tree growth, crop yield loss, and visible foliar injury, as well as impacts on the associated ecosystem services, while taking note of the uncertainties and limitations associated with several key aspects of this information. In addition to uncertainties

related to the WREA air quality scenarios and assessments summarized in section IV.C above, the PA also recognized uncertainties associated with the evidence underlying the tree seedling and crop E-R functions (U.S. EPA, 2014c, section 6.3). These include uncertainties regarding intra-species variability due to the different numbers of studies that exist for different species so that the weight of evidence is not the same for each species. Those species with more than one study show variability in response and E-R functions. The potential variability in less well-studied species is, however, unknown (U.S. EPA, 2013a, pp. 9-123 to 9-125; U.S. EPA, 2014b, section 6.2.1.2, and Table 6-27). The PA also recognizes uncertainty regarding the extent to which tree seedling E-R functions can be used to represent mature trees since seedling sensitivity has been shown in some cases to not reflect mature tree O_3 sensitivity in the same species and uncertainty in the relationship of O_3 effects on tree seedlings (e.g., relative biomass loss) in one or a few growing seasons to effects that might be expected to accrue over the life of the trees extending into adulthood (U.S. EPA, 2013a, section 9.6 and pp. 9-52 to 9-53; U.S. EPA, 2014b, sections 6.2.1.1, 6.2.1.4 and Tables 6-5 and 6-27).

With respect to tree growth, the PA gave primary consideration to relative biomass loss estimates derived from the E-R functions, described in section IV.B.1.b above and in the PA, while also considering WREA risk/exposure estimates related to this effect (U.S. EPA, 2014c, section 6.4). The PA takes note of the different index value estimates presented in Table 6-1 of PA (Table 8 below) with regard to the number of studied species below different response benchmarks, as well as with regard to the median response. The PA additionally considers the WREA estimates regarding: (1) percent of assessed geographic area exceeding 2% weighted relative biomass (U.S. EPA, 2014c, Table 6-2); (2) number of assessed Class I areas with tree seedling weighted relative biomass loss estimates below 2% (U.S. EPA, 2014c, Table 6-3); and

(3) the percent median biomass loss across counties for different air quality scenarios (U.S. EPA, 2014c, Table 5-5). The PA further notes other WREA estimates for effects on ecosystem services related to public welfare, such as carbon sequestration and air pollutant removal. With respect to crop yield loss, the PA notes the summary of RYL estimates for individual crop species and for the median across species (Table 8), and the WREA risk/exposure estimates (U.S. EPA, 2014b, Section 6.3). The PA also notes information available on visible foliar damage to species occurring in areas preserved for their natural character, such as federal Class I areas, and the analyses in the WREA evaluating biosite data and several benchmarks of injury (U.S. EPA, 2014b, section 5.4.2).

Table 8. Tree Seedling Biomass Loss and Crop Yield Loss Estimated for O_3 Exposure over a Season

W126 value for exposure period	Tree seedling RBL[A]		Crop RYL[C]	
	Median Value	**Individual Species**	**Median Value**	**Individual Species**
21 ppm-hrs	Median species w. 6.8% loss [B]	**≤ 2% loss: 3/11 species** ≤ 5% loss: 5/11 species ≤10% loss: 7/11 species ≤15% loss: 10/11 species >40% loss: 1/11 species	Median species w. 7.7 % loss [D]	**≤ 5% loss: 4/10 species** >5,<10% loss: 3/10 species >10,<20% loss: 3/10 species
19 ppm-hrs	Median species w. 6.0% loss [B]	**≤ 2% loss: 3/11 species** <5% loss: 5/11 species ≤10% loss: 7/11 species ≤15% loss: 10/11 species >30% loss: 1/11 species	Median species w. 6.4 % loss [D]	**≤ 5% loss: 5/10** species >5, <10% loss: 3/10 species >10,<20% loss: 2/10 species
17 ppm-hrs	Median species w. 5.3% loss [B]	**≤ 2% loss: 5/11 species** <5% loss: 5/11 species ≤10% loss: 9/11 species ≤15% loss: 10/11 species >30% loss: 1/11 species	Median species w. 5.1 % loss [D]	**≤ 5% loss: 5/10 species** >5, <10% loss: 3/10 species >10,<20% loss: 2/10 species
15 ppm-hrs	Median species w. 4.5% loss [B]	**≤ 2% loss: 5/11 species** ≤5% loss: 6/11 species ≤10% loss: 10/11 species >30% loss: 1/11 species	**Median species w.≤5% loss** [D]	**≤ 5% loss: 6/10 species** >5, <10% loss: 4/10 species
13 ppm-hrs	Median species w. 3.8% loss [B]	**≤ 2% loss: 5/11 species** <5% loss: 7/11 species <10% loss: 10/11 species >20% loss: 1/11 species	**Median species w.≤5% loss** [D]	**≤ 5% loss: 6/10 species** >5, <10% loss: 4/10 species

11 ppm-hrs	Median species w. 3.1% loss [B]	**≤ 2% loss: 5/11 species** ≤5% loss: 8/11 species ≤10% loss: 10/11 species >20% loss: 1/11 species	**Median species w. ≤5% loss [D]**	**≤ 5% loss: 9/10 species** >5, <10% loss: 1/10 species
9 ppm-hrs	Median species w. 2.4% loss [B]	**≤ 2% loss: 5/11 species** ≤5% loss: 10/11 species >20% loss: 1/11 species	**Median species w. ≤5% loss [D]**	**≤ 5% loss: all species**
7 ppm-hrs	**Median species w. ≤2% loss [B]**	**≤ 2% loss: 7/11 species** ≤5% loss: 10/11 species >15% loss: 1/11 species	**Median species w. ≤5% loss [D]**	**≤ 5% loss: all species**

A Estimates are based on the 11 E-R functions for tree seedlings described in WREA, Appendix 6F and discussed in the PA, section 5.2.1, with the exclusion of cottonwood in consideration of CASAC comments on differences of that study from the other controlled E-R studies (Frey, 2014b, 2014c).
B This is the median of the composite E-R functions for 11 tree species from the WREA, Appendix 6F (discussed in the PA, section 5.2.1).
C Estimates here are based on the 10 E-R functions for crops (from the PA, Appendix 6F and section 5.3.1).
D This median value is the median of the composite E-R functions for 10 crops from WREA, Appendix 6F (also discussed in the PA, section 5.3.1).

Given the wide variation in sensitivity of studied tree species to O_3-induced relative biomass loss, the PA focused consideration on both median species values and individual species responses and RBL estimates for a given range of W126 index values. In this consideration, the PA took note of CASAC's advice regarding RBL levels, specifically their emphasis on a benchmark of median relative tree biomass loss at or below 2% and their view that a 6% median relative biomass loss is "unacceptably high." The median tree species RBL estimate is at or below 2% only at the lowest W126 level assessed, 7 ppm-hrs. At incrementally higher W126 index levels, the median RBL is also incrementally higher, so that at W126 index values of 9, 11, 13, 15, 17 and 19 ppm-hrs, the median RBL increases to 2.4%, 3.1%, 3.8%, 4.5%, 5.3% and 6.0%, respectively. Thus, the median species biomass loss is below 6%, the level characterized by the CASAC as unacceptably high, across the W126 range of 7 to 17 ppm-hrs, for which it varies from approximately 2% to approximately 5%. Given this finding, the PA discussion of a range of levels appropriate to consider focuses on this range. In focusing on this range, the PA considers the full array of CASAC advice with regard to interpretation of the evidence and

exposure/risk information on vegetation-related effects of O_3, as well as the role of the Administrator's judgments in identifying the level of air quality that is requisite to protect public welfare from adverse effects, as noted in section IV.A above.[218]

The PA recognizes that public welfare judgments may reasonably be informed by a range of biomass loss benchmarks, in contexts of considering both median RBL estimates and RBL estimates for individual species. Accordingly, in considering individual tree species estimates, the PA notes the value of additionally characterizing the RBL estimates in comparison to higher loss levels such as 10% or 15%.

For every W126 value over the full range from 7 to 17 ppm-hrs, the RBLs for each of five species is less than 2% (Table 8), which is the lower benchmark that CASAC identified for tree species. Accordingly, the PA focused attention on the remaining six more sensitive studied species (i.e., eastern white pine, aspen, tulip poplar, ponderosa pine, red alder, and black cherry) to evaluate the protection against tree seedling biomass loss at different W126 levels within the range from 17 to 7 ppm-hrs. At a W126 index value of 17 ppm-hrs, one of these six species (red alder) has a RBL estimate below 6%, while at the W126 index value of 7 ppm-hrs, five of these six species have RBLs below 6% (eastern white pine, aspen, tulip poplar, ponderosa pine, red alder). Taken together with the more tolerant species, the proportion of the studied tree species with RBLs below 6% are 6 of 11, 7 of 11, 8 of 11, and 10 of 11 at W126 index values of 17, 15, 13, and 11 ppm-hrs, respectively.

---

[218] In the context of the O_3 standard, such judgments include: the weight to give the evidence of specific vegetation-related effects estimated to result across a range of cumulative seasonal concentration-weighted O_3 exposures; the weight to give associated uncertainties, including those related to the variability in occurrence of such effects in specific areas of U.S., such as those of particular public welfare significance; and, judgments on the extent to which such effects in such areas may be considered adverse to public welfare.

With regard to other, higher, RBL benchmark levels and estimates for all 11 species, the PA notes that 9 of 11 studied tree species have a predicted RBL below 10% at the W126 level of 17 ppm-hrs, while 10 of 11 species have a predicted RBL below 10% for W126 levels of 15 to 7 ppm-hrs. In addition, 10 of 11 studied tree species have a predicted RBL below 15% for W126 levels of 17 to 7 ppm-hrs. The PA notes that the RBL estimates for black cherry, the most sensitive of the 11 species, remain above 15% for W126 index values across the range from 17 to 7 ppm-hrs, making unclear the extent to which black cherry estimates might inform consideration of different W126 exposures within this range (U.S EPA, 2014c, section 6.6 and Table 6-1; U.S. EPA, 2014b, section 6.2 and Appendix 6A).

While recognizing the limitations and uncertainties associated with the WREA air quality scenarios with regard to their representation of conditions just meeting different three-year average W126 index values (as summarized in section IV.C.1 above), including the potential underestimation of the highest O_3 concentrations, the PA additionally considers several WREA RBL analyses (U.S. EPA, 2014c, section 6.3). In the WREA characterization of the number of counties where the median RBLs were greater than 2%, 7% of the counties have median RBLs greater than 2% in the 15 and 11 ppm-hrs W126 scenarios, as compared to 8% for the current standard (U.S. EPA, 2014c, Table 5-5; U.S. EPA, 2014b, Table 6-7). The percentage is 6% in the 7 ppm-hrs W126 scenario. Of the 221 counties (7% of counties) estimated to have a median RBL above 2% for the 15 ppm-hrs scenario, 203 of those counties have a RBL greater than 2% because of the presence of black cherry (U.S. EPA, 2014c, section 6.3).

In considering the potential magnitude of the ecosystem impact of O_3-related biomass effects on tree growth, the PA additionally focused on the WREA estimates of weighted RBL for the W126 air quality scenarios (U.S. EPA, 2014b, section 6.8). For the current standard and the

three W126 scenarios, the percent of total assessed area having weighted RBL greater than 2% was 0.2%, 0.2%, 0.1% and <0.1%, respectively (U.S. EPA, 2014c, Table 6-2; U.S. EPA 2014b, Table 6-25). In giving particular attention to estimates for Class I areas, the PA notes that for all four scenarios, the WREA estimates indicate weighted RBL greater than 2% in one or two of the 145 assessed nationally protected Class I areas (U.S. EPA, 2014c, sections 6.3 and 6.6).

In considering potential impacts on ecosystem services related to reductions in O_3 effects on tree growth, the PA particularly recognizes that impacts on climate regulation can reasonably be concluded to be potentially significant from a public welfare perspective. In additionally recognizing that carbon sequestration has been identified as a potentially important tool for managing anthropogenic impacts on climate, the PA considers the WREA estimates of potential increases in forestry carbon storage for ambient O_3 reductions in the three W126 air quality scenarios (U.S. EPA, 2014c, sections 6.3 and 6.6; U.S. EPA, 2014b, section 6.6.1). The WREA estimates additional forestry carbon storage potential of 13, 593 and 1,600 $MMtCO_2e$ (over 30 years) for the W126 scenarios of 15, 11 and 7 ppm-hrs, respectively, as compared to the current standard (U.S. EPA, 2014b, Table 6-18). Compared to the absolute estimate for the current standard scenario (approximately 89,000 $MMtCO_2e$, over 30 years), these amounts represent additional storage of less than 0.1 %, just under 1% and under 2% for the 15, 11 and 7 ppm-hrs scenarios, respectively (U.S. EPA, 2014b, section 6.6.1 and Appendix 6B).

The PA additionally considers the WREA estimates for five urban areas of how reduced growth of O_3-sensitive trees in urban forests may affect air pollutant removal (U.S. EPA, 2014b, sections 6.6.2 and 6.7 and Appendix 6D). As with the national estimates, estimates for all five case study areas indicate generally small differences between the current standard and the three W126 scenarios (U.S. EPA, 2014c, Table 6-5). The PA additionally notes significant

uncertainties and limitations associated with WREA estimates related to carbon sequestration and air pollution removal (U.S. EPA, 2014b, Table 6-27; U.S. EPA, 2014c, sections 6.3 and 6.6), some of which are summarized in section IV.C.2.b above. The PA recognizes that, as with consideration of other pertinent evidence and exposure/risk information, the Administrator's consideration of WREA estimates for these ecosystem services will involve judgments regarding the appropriate weight to place on such uncertainties as well as the potential impacts to the public welfare of the estimates.

The PA additionally considers the biomass effects of O_3 on crops estimated for different W126 index values across the range identified above. For this consideration, the PA focuses on the 10 crops for which robust E-R functions have been established, as described in section IV.B.1 above: barley, lettuce, field corn, grain sorghum, peanut, winter wheat, field cotton, soybean, potato and kidney bean (U.S. EPA, 2013a; U.S. EPA, 2014b, section 6.5 and Figure 6-3). In evaluating this information, the PA takes note of CASAC's comment regarding significance of 5% for median crop relative yield loss (RYL). The PA finds that the median crop RYL is at or below 5% for all W126 index values from 7 to 17 ppm-hrs and observes that this finding makes it unclear to what extent this information informs consideration of levels within this range. The RBL estimates for half of the ten individual species are below 5% RYL at 17 ppm-hrs. The number of the ten individual crops with RYL below 5% is six for W126 values of 15 and 13 ppm-hrs, nine for a W126 value of 11 ppm-hrs and ten for W126 levels of 9 and 7 ppm-hrs. Recognizing that different crops are likely to have different values or importance to public welfare, the PA also considers the RYL estimates across the W126 range for individual species.

In considering these RYL estimates, the PA recognizes that they do not reflect the influence of the heavy management of agricultural crops that is common in the U.S. and so cannot be easily interpreted with regard to potential public welfare significance. In light of the median RYL estimates of approximately 5% or lower for W126 index values at and below 17 ppm-hrs, the PA gives less emphasis to consideration of crop RYL, while noting that this information indicates that a secondary standard revised to provide additional protection for vegetation with attention to tree growth, would be expected to also provide additional protection to crops over that provided by the current standard (U.S. EPA, 2014c, section 6.6).

The PA also considers the evidence and exposure/risk information with regard to visible foliar injury and the extent to which that might inform consideration of potential alternative secondary standards appropriate for the Administrator to consider. Specifically, the PA notes the findings of the WREA analyses of the nationwide USFS/FHM biosite dataset (2006-2010) that while soil moisture conditions influence the proportion of biosites with O_3-related visible foliar injury, as described in section IV.B.1.a above, the proportion of such sites increases appreciably with increasing W126 index values up to approximately 10 ppm-hrs, while relatively little or no change in incidence of injury is seen with O_3 exposures at higher W126 index values (U.S. EPA 2014b, Chapter 7, Figure 7-10). The PA additionally notes that visible foliar injury has been identified by the federal land managers as a diagnostic tool for informing conclusions regarding potential O_3 impacts on potentially sensitive AQRVs (USFS, NPS, FWS, 2010), which the PA concludes indicates that such O_3-induced impacts might be considered to have the potential to impact the public welfare in scenic and/or recreational areas during years they occur.

The PA was unable, however, to identify any guidance for federal land managers regarding at what spatial scale or what degree of severity visible foliar injury might be sufficient

to trigger protective action based on this potential impact on AQRVs. The PA states that there does not appear to be consensus in the literature regarding severity of visible foliar injury and risks to plant functions or services, additionally noting that CASAC, while identifying percent biomass loss and yield loss benchmarks for tree seedlings and commodity crops, respectively, did not provide any benchmark or criteria for consideration of O_3 impacts related to this endpoint. Further, as in previous reviews, the ISA concludes visible foliar injury is not always a reliable indicator of other negative effects on vegetation, making it difficult to relate visible foliar injury symptoms to other vegetation effects such as individual plant growth, stand growth, or ecosystem characteristics (U.S. EPA, 2013a, section 9.4.2, p. 9-39). Additionally, although evidence shows visible foliar injury can occur under very low cumulative O_3 exposures, "…the degree and extent of visible foliar injury development varies from year to year and site to site…, even among co-members of a population exposed to similar O_3 levels, due to the influence of co-occurring environmental and genetic factors" (U.S. EPA 2013a, section 9.4.2, p. 9-38). Thus, while the PA recognizes visible foliar injury as an important O_3 effect which, depending on severity and spatial extent may reasonably be concluded to be of public welfare significance, most particularly in nationally protected areas such as Class I areas, it additionally recognizes the appreciable variability in this endpoint, which poses challenges to giving it primary emphasis in identifying potential alternative standard levels.

On the basis of all the considerations described above, including the evidence and exposure/risk analyses, and advice from CASAC, the PA concludes that a range of W126 index values appropriate for the Administrator to consider in identifying a secondary standard that might be expected to provide the requisite protection to the public welfare from any known or anticipated adverse effects, extends from 7 to 17 ppm-hrs. The PA notes, however, the role of

judgments by the Administrator in such decisions, as recognized above. In selecting this range, the PA primarily considers the evidence- and exposure/risk-based information for cumulative seasonal O_3 exposures represented by W126 index values (including those represented by the WREA average W126 scenarios) associated with biomass loss in studied tree species, both in and outside areas that have been afforded special protections. The PA recognizes that tree biomass loss can be an indicator of more significant ecosystem-wide effects which might reasonably be concluded to be significant to public welfare. For example, when biomass loss occurs over multiple years at a sufficient magnitude, it is linked to some level of effects on an array of ecosystem-level processes, such as nutrient and water cycles, changes in above and below ground communities, carbon storage and air pollution removal, that benefit the public welfare (U.S. EPA, 2014c, Figure 5-1). In focusing on tree biomass effects, the PA gave emphasis to CASAC's judgment that a 6% median RBL is unacceptably high, and that the 2% median RBL is an important benchmark to consider. The PA notes that for the lower W126 value of 7 ppm-hrs that the median tree species biomass loss is at or below 2% and that for the upper value of 17 ppm-hrs that the median tree biomass loss is below 6%.[219]

In considering the stability and potential for associated greater public welfare protection offered by a three-year form, as well as based on the recognition that in any given year in the environment, other environmental factors can influence the extent to which O_3 may have the impact predicted by the E-R functions on which much of the range discussion above focuses, the PA gave careful consideration to the support for consideration of potential alternative W126

[219] We note that a W126 index value of 19 ppm-hrs is estimated to result in a median RBL value of 6%, as shown in Table 2 above.

based standards with levels in the range identified above (17 ppm-hrs to 7 ppm-hrs) with a three-year average form.

Thus, the PA concludes that in staff's view, the evidence- and exposure/risk-based information relevant to tree biomass loss and the associated ecosystem services important to the public welfare support consideration of a W126-based secondary standard with index values within the range of 7 to 17 ppm-hrs, and a form averaged over three years. In reaching this conclusion, the PA gave particular consideration to the importance of considering the lasting or carry-over effects that can derive from single year exposures of perennial plants, recognizing the importance of considering the available evidence and exposure/risk based information related to such effects, as well as associated uncertainties. The PA additionally recognized that there is limited information to discern differences in the level of protection afforded for cumulative growth-related effects by potential alternative W126-based standards of a single year form as compared to a three-year average form. Lastly, the PA recognizes the role of policy judgments required of the Administrator with regard to the public welfare significance of identified effects, the appropriate weight to assign the range of uncertainties inherent in the evidence and analyses, and, ultimately, in identifying the requisite protection for the secondary O_3 standard. Examples of areas where the Administrator's judgments would be expected include those stemming from consideration of the effects associated with longer-term conditions and the role that year-to-year exposure variability may play in associated public welfare impacts, as well as the objectives for consideration of tree species biomass loss estimates in relationship to identified benchmarks (e.g., 2% or greater).

The PA also concludes that, to the extent the Administrator finds it useful to consider the public welfare protection that might be afforded by a revised primary standard, this is

appropriately judged through the use of a cumulative seasonal W126-based exposure metric, a metric considered appropriate for evaluating impacts on vegetation. For example, comparison of the air quality conditions (expressed in terms of W126 exposures) expected to result from a revised primary standard to the W126-based exposures concluded to provide requisite public welfare protection would thus inform a judgment of whether a secondary standard set identical to a revised primary standard would be expected to achieve the appropriate level of air quality. The PA notes that such a comparison would be in terms of a metric considered appropriate for evaluating impacts on vegetation which inform conclusions on public welfare impacts. The PA further concludes that the drawing of conclusions with regard to the public welfare protection afforded by such a standard should entail consideration of the air quality conditions likely to be achieved in terms of the cumulative seasonal W126-based metric described above.

Accordingly, the PA describes several analyses of air quality data that might inform such consideration (U.S. EPA, 2014c, section 6.4), and notes the importance of taking into account associated uncertainties, including those associated with the limited monitor coverage in many rural areas, such as those in the West and Southwest regions and at high elevation sites. Additional such analyses, based on more recent O_3 monitoring data, have been developed since the completion of the PA. All of these analyses are summarized in section IV.E.4 below. In reaching conclusions on appropriate policy options for a revised secondary standard the Administrator has considered the findings of these analyses, as described in section IV.E.5 below.

3. CASAC Advice

Beyond the evidence- and exposure/risk-based considerations in the PA discussed above, the EPA's consideration of a revised secondary standard also takes into account the advice and

recommendations of CASAC. The EPA also considered public comments received to date, some of which urged the consideration of a secondary standard with a cumulative seasonal form using the W126 metric and a level within the range of 7 to 15 ppm-hrs or in the low end of this range,[220] while others have urged retaining the existing form and averaging time due to their view of a lack of new information to support a distinct secondary standard.

In advice offered on a revised secondary standard in the current review, similar to advice in the last review, including advice offered on the 2010 proposed reconsideration, the CASAC recommended "retaining the current indicator (ozone) but establishing a revised form of the secondary standard to be the biologically relevant W126 index accumulated over a 12-hour period (8 a.m. – 8 p.m.) over the 3-month summation period of a single year resulting in the maximum value of W126" (Frey, 2014c, p. iii). With regard to the level, the CASAC recommended that "that the level associated with this form be within the range of 7 ppm-hrs to 15 ppm-hrs to protect against current and anticipated welfare effects of ozone" and that "CASAC does not support a level higher than 15 ppm-hrs" (Frey, 2014c, p. iii). The CASAC additionally stated that "[i]n reaching its scientific judgment regarding the indicator, form, summation time, and range of levels for a revised secondary standard, the CASAC has focused on the scientific evidence for the identification of the kind and extent of adverse effects on public welfare," while also acknowledging "that the choice of a level within the range recommended based on scientific evidence is a policy judgment under the statutory mandate of the Clean Air Act" (Frey, 2014c, p. iii).

[220] Public comment received thus far in this review are in the docket EPA–HQ–OAR-2008-0699, accessible at www.regulations.gov

In providing advice on a range for the secondary standard, the CASAC noted a W126 index value for which the median tree species RBL estimate was 6 percent, and the median crop species RBL estimate was over 5 percent, stating that "[t]hese levels are unacceptably high" (Frey, 2014c, p. iii).[221] In addition, regarding consideration of relative biomass loss benchmarks for tree seedlings, the CASAC stated that "[a] 2% biomass loss is an appropriate scientifically based value to consider as a benchmark of adverse impact for long-lived perennial species such as trees, because effects are cumulative over multiple years" (Frey, 2014c, p. 14). In so stating, the CASAC referenced findings for biomass loss in aspen exposed to elevated O_3 over seven years, citing Wittig et al., 2009.[222] The CASAC additionally pointed to the report of the 1996 workshop sponsored by the Southern Oxidants Study group (Heck and Cowling, 1997, noted in section IV.B.2 above) which described a general consideration of 1-2% per year growth reduction in making judgments the group identified as appropriate for the endpoint of growth effects in trees, without providing an explicit rationale for the identified percentages (Frey, 2014c, p. 14). The CASAC also commented that "it is appropriate to identify a range of levels of alternative W126-based standards that includes levels that aim for not greater than 2% RBL for the median tree species" (Frey, 2014c, p. 14). The CASAC noted that the "level of 7 ppm-hrs is the only level analyzed for which the relative biomass loss for the median tree species is less

[221] The CASAC made this comment while focusing on Table 6-1 in the second draft PA and the entry for 17 ppm-hrs. That table was revised for inclusion in the final PA in consideration of CASAC comments on the E-R function for eastern cottonwood, such that the RBL estimates for 17 ppm-hrs in the final table (see Table 2 above) are below the values CASAC viewed as "unacceptably high".

[222] The way in which the statement pointing to the aspen seven-year biomass loss value from Wittig et al (2009) relates to CASAC's view with regard to 2%, however, is unclear as the original source for this finding (cited in Wittig et al., 2009) indicates yearly relative biomass loss values during this seven year exposure that are each well above 2%, and, in fact, are all above 20% (King, et al., 2005).

than or equal to 2 percent" indicating that 7 ppm was appropriate lower bound for the recommended range (Frey, 2014c, p. 14).

With regard to consideration of effects on crops, the CASAC, as noted above, described median species RYL over 5% yield loss as "unacceptably high." The CASAC further noted that "[c]rop loss appears to be less sensitive than these other indicators, largely because of the CASAC judgment that a 5% yield loss represents an adverse impact, and in part due to more opportunities to alter management of annual crops" (Frey, 2014c, p. 14).

The CASAC acknowledged that "the choice of a level within the range recommended based on scientific evidence is a policy judgment under the statutory mandate of the Clean Air Act", while further providing its own policy recommendations, including the following (Frey, 2014c, p. iii).

> [T]he CASAC advises that a level of 15 ppm-hrs for the highest 3-month sum in a single year is requisite to protect crop yield loss, but that lower levels provide additional protection against crop yield loss. Furthermore, there are specific economically significant crops, such as soybeans, that may not be protected at 15 ppm-hrs but would be protected at lower levels. A level below 10 ppm-hrs is required to reduce foliar injury. A level of 7 ppm-hrs is protective of relative biomass loss for trees and offers additional protection against crop yield loss and foliar injury. Therefore, 7 ppm-hrs is protective of ecosystem services. Thus, lower levels within the recommended range offer a greater degree of protection of more endpoints than do higher levels within the range.

Additionally, in regard to consideration of form, the CASAC noted that "[i]f, as a policy matter, the Administrator prefers to base the secondary standard on a three-year averaging period for the purpose of program stability, then the level of the standard should be revised downward such that the level for the highest three-month summation in any given year of the three-year period would not exceed the scientifically recommended range of 7 ppm-hrs to 15 ppm-hrs" (Frey, 2014c, pp. iii and iv). In related manner, the CASAC noted that a three-year average

W126 level of 13 ppm-hrs may be appropriate depending on consideration of year-to-year variability and such policy considerations (Frey, 2014c, p. iv).

Lastly, in comments recognizing uncertainties associated with the evidence and exposure and risk analyses, the CASAC stated that "there is sufficient scientific evidence, and sufficient confidence in the available research results, to support the advice we have given above for this review cycle of the primary and secondary standards" (Frey, 2014c, p. iv).

4. Air Quality Analyses

As described in section II.D. above, the PA concludes with regard to the primary standard that it is appropriate for the Administrator to consider revision of the level to within the range of 60 to 70 ppb. In consideration of this conclusion for the primary standard, although the PA also concludes it is appropriate to consider a revised secondary standard with a cumulative, seasonal, concentration-weighted form, the PA recognized that, it may be practical to consider the extent to which a revised secondary standard in the form of the current secondary standard might be expected to also reduce and provide protection from cumulative seasonal exposures of concern, noting that, for example, if a clear and robust relationship was found to exist between 8-hour daily peak O_3 concentrations and cumulative, seasonal exposures, the averaging time and form of the current standard might be concluded to have the potential to be effective as a surrogate (U.S. EPA, 2014c, section 6.4).

Therefore, the PA evaluated what the available information indicated with regard to control of cumulative O_3 exposures that might be afforded by alternative secondary standards with the averaging time and form of the current standard (a three-year average of 4th highest 8-hour average concentrations). The available information addressing this point includes a "focus study" in the ISA, and several air quality analyses described in the PA, chapters 2, 5 and 6 and

Appendix 2b.[223] Additionally, a similar air quality analysis performed with more recent monitoring data is now available and is also described here.

The focus study described in the ISA examined the diel variability in O_3 concentrations in six rural areas between 2007 and 2009 (U.S. EPA, 2013a, pp. 3-131 to 3-133). The ISA reported that "[t]here was considerable variability in the diel patterns observed in the six rural focus areas" with the three mountainous eastern sites exhibiting a "generally flat profile with little hourly variability in the median concentration and the upper percentiles," while the three western rural areas demonstrated a "clear diel pattern to the hourly O_3 data with a peak in concentration in the afternoon similar to those seen in the urban areas," which was especially obvious at the San Bernardino National Forest site, 90 km east of Los Angeles at an elevation of 1,384 meters (U.S. EPA, 2013a, p. 3-132). Thus, while the western sites that are influenced by upwind urban plumes may have increased cumulative seasonal values coincident with increased daily 8-hour peak O_3 concentrations, this analysis indicates that, in sites without such an urban influence (the eastern sites in this analysis), such a relationship does not occur (U.S. EPA, 2013a, section 3.6.3.2). Thus, the lack of such a relationship indicates that in some locations, O_3 air quality patterns can lead to elevated cumulative, seasonal O_3 exposures without the occurrence of elevated daily maximum 8-hour average O_3 concentrations (U.S. EPA, 2013a, section 3.6.3.2). Further, staff notes that the prevalence and geographic extent of such locations is unclear, since as in the last review, there continue to be relatively fewer monitors in the western U.S., including in high elevation remote sites. In considering the findings of this analysis, the PA additionally recognized, however, that the cumulative seasonal values for the eastern rural sites, where

[223] This information and analyses were included in the second draft PA (U.S. EPA, 2014j), reviewed by CASAC in early 2014, and drafts of the ISA, reviewed by CASAC earlier in the review.

cumulative seasonal O_3 concentrations appear to be relatively less related to daily maximum 8-hour concentrations, are lower in general than those of the western, urban-influenced sites.

In addition to the focus study described in the ISA (U.S. EPA, 2013a, section 3.6.3.2), the PA considers additional analyses of air quality monitoring data. For example, Chapter 2 of the PA characterized recent monitoring data of O_3 air quality in rural areas. While approximately 80 percent of the O_3 monitoring network is urban focused, about 120 rural monitors are divided among CASTNET, NCore, and portable O_3 monitors (POMs) sites (U.S. EPA, 2014c, Chapter 2, pp. 2-2 to 2-3, Figure 2.1). Specifically, as stated in Chapter 2 of the PA, "[a]lthough rural monitoring sites tend to be less directly affected by anthropogenic pollution sources than urban sites, rural sites can be affected by transport of O_3 or O_3 precursors from upwind urban areas and by local anthropogenic sources such as motor vehicles, power generation, biomass combustion, or oil and gas operations" (U.S. EPA, 2013a, section 3.6.2.2). In addition, O_3 tends to persist longer in rural than in urban areas due to lower rates of chemical scavenging in non-urban environments. At higher elevations, increased O_3 concentrations can also result from stratospheric intrusions (U.S. EPA, 2013a, sections 3.4, 3.6.2.2). As a result, O_3 concentrations measured in some rural sites can be higher than those measured in nearby urban areas (U.S. EPA, 2013a, section 3.6.2.2) and the ISA concludes that "cumulative exposures for humans and vegetation in rural areas can be substantial, and often higher than cumulative exposures in urban areas" (U.S. EPA, 2013a, p. 3-120). These known differences between urban and rural sites suggest that there is the potential for an inconsistent relationship between 8-hour daily peak O_3 concentrations and cumulative, seasonal exposures in those areas. However, the PA also notes that reductions in NOx emissions that occur in urban areas to attain primary standards would also

have the effect of reducing downwind, rural concentrations over the season (U.S. EPA, 2014c, section 6.4).

In addition, as was done in both the 1997 and 2008 reviews, the PA analyzed relationships between O_3 levels in terms of the current averaging time and form and a W126 cumulative form, based on recent air quality data. One analysis in the PA describes the W126 index values and current standard design values at each monitor for two periods: 2001-2003 and 2009-2011 (e.g., U.S. EPA, 2014c, Appendix 2B, Figures 2B-2 and 2B-3). This shows that between the two periods, during which broad scale O_3 precursor emission reductions occurred, O_3 concentrations in terms of both metrics were reduced. There is a fairly strong, positive degree of correlation between the two metrics (U.S. EPA, 2014c, Appendix 2B).[224] Focusing only on the latter dataset (2009-2011), it can be seen that at monitors just meeting the current standard (three-year average fourth-highest daily maximum 8-hour average concentration equal to 0.075 ppm), W126 index values (in this case three-year averages) varied from less than 3 ppm-hrs to approximately 20 ppm-hrs (U.S. EPA, 2014c, Appendix 2B, Figure 2B-3b). At sites with a three-year average fourth-highest daily maximum 8-hour average concentration at or below a potential alternative primary standard level of 70 ppb, three-year W126 index values were above 17 ppm-hrs at no monitors, above 15 ppm-hrs at one monitor, and above 13 ppm-hrs at 8 monitors in the West and Southwest NOAA climate regions. At sites with a three-year average fourth-highest daily maximum 8-hour average concentration at or below a potential alternative primary standard level of 65 ppb, three-year W126 index values were above 11 ppm-hrs at no monitors, above 9 ppm-hrs at three monitors, and above 7 ppm-hrs at 9 monitors (distributed across five regions).

[224] Appendix 2B in the PA additionally observes that the program implemented for reducing precursor emissions, especially NOx, appears to have been an effective strategy for lowering both design values and W126 index values.

The majority of these nine monitoring sites are located in the West and Southwest regions and include the states of Arizona, California, Colorado, Nevada, New Mexico, and Utah. At sites with a three-year average fourth-highest daily maximum 8-hour average concentration at or below a potential alternative primary standard level of 60 ppb, three-year W126 index values were at or below 7 ppm-hrs at all monitors (U.S. EPA, 2014c, Figure 2B-3b).

Another analysis in Chapter 2 of the PA presents the data for sets of recent three-year periods back to 2006-2008 and indicates that among the counties with O_3 concentrations that met the current standard, the number of counties with three-year W126 index values above 15 ppm-hrs ranges from fewer than 10 to 24 (U.S. EPA, 2014c, Appendix 2B, Figure 2B-9). In general during this longer period, W126 index values above 15 ppm-hrs and meeting the current standard were predominantly in Southwest region. As the first analysis in Appendix 2B of the PA (for the 2001-2003 and 2009-2011 periods) indicates, monitors in the West and Southwest tend to have higher W126 index values relative to their design values than do monitors in other regions. This pattern is noteworthy because the Southwest region has a less dense monitoring network than regions in the eastern U.S. (see U.S. EPA, 2014c, Figure 2-1), so that the extent to which this pattern occurs throughout these regions is uncertain.

An additional air quality analysis was performed for this review that is documented in a technical memorandum (Wells, 2014). This analysis examines the relationships between O_3 levels in terms of the form and averaging time for the current standard (the "4th max" metric) and a three-year average, W126-based metric. The first part of the analyses focus on the air quality values for the most recent three-year period, 2011-2013. Based on this information, it can be seen that at monitors just meeting the current standard (three-year average fourth-highest daily maximum 8-hour average concentration equal to 0.075 ppm), W126 index values (in this case

three-year averages) varied from less than 3 ppm-hrs to up to 23 ppm-hrs (Figure 5a). At sites with a three-year average fourth-highest daily maximum 8-hour average concentration at or below a level of 70 ppb (566 monitors distributed across all regions of the U.S.), three-year W126 index values were above 17 ppm-hrs at no monitors, above 15 ppm-hrs at 4 monitors, and above 13 ppm-hrs at 16 monitors (1% of the monitors in full dataset and less than 3% in this group). These 16 monitors are located in the Southwest (15 monitors) and West North Central NOAA climate regions and include the states of Arizona, Colorado, New Mexico, Utah and Wyoming. At sites with a three-year average fourth-highest daily maximum 8-hour average concentration at or below a level of 65 ppb (220 monitors distributed across all regions of the U.S.[225]), three-year W126 index values were above 11 ppm-hrs at no monitors, above 7 ppm-hrs at 15 monitors. These 15 monitoring sites are predominantly located in the West North Central and Southwest regions. At all sites with a three-year average fourth-highest daily maximum 8-hour average concentration at or below a level of 60 ppb, three-year W126 index values were at or below 7 ppm-hrs (Wells, 2014, Figure 5b).

Further analysis in the technical memorandum focused on a comparison of monitors with a three-year average fourth-highest daily maximum 8-hour average concentration at or below a level of 70 ppb and a three-year W126 index values above 13 ppm-hrs for sets of three-year periods between 2001-2003 and 2011-2013 (Wells, 2014, Figure 8). This analysis found that the number of sites meeting 70 ppb while exceeding 13 ppm-hrs has remained relatively constant over the past decade, with these sites consistently being limited to a small number in the West and Southwest. In addition, the number of sites meeting both 70 ppb and 13 ppm-hrs has

[225] This memo utilizes the same regional specifications as are used in the PA and WREA (e.g., U.S. EPA, 2014c, Appendix 2B, Figure 2B-1).

increased over time, while the number of sites exceeding both 70 ppb and 13 ppm-hrs has decreased by a similar amount.

The second part of the analysis in the technical memorandum focused on trends in the relationships between O_3 levels in terms of the 4th high metric and a three-year average W126 metric, starting with the 2001-2003 period and ending with the 2011-2013 period. Based on analysis of 729 monitors, trends in both the 4th high metric and the three-year average, W126 metric showed decreasing values between 2001-2003 and 2011-2013. In addition, the amount of year-to-year variability in the two metrics tended to decrease over time with decreasing O_3 concentrations, especially for the W126 metric. Most sites in the eastern U.S. and California saw large, widespread decreases in both the 4th high metric and the three-year average W126 metrics over the past decade as a result of regional NOx control programs. In the inter-mountain west, where control programs have been more localized, the decreases observed in the 4th high metric and three-year average W126 metrics were typically much smaller in magnitude, with a small number of sites showing significant increases.

As part of this analysis, regional comparisons were included on the relative changes in the relationships between O_3 levels in terms of the 4th high metric and a three-year average W126 metric between the periods of 2001-2003 and 2011-2013. Figure 12 in the technical memorandum shows that a positive, linear relationship persists within each region between the changes in 4th high and three-year average W126 metrics. Nationally, the three-year average W126 metric decreased by approximately 0.7 ppm-hrs per unit ppb decrease in the 4th high metric. In addition, the Southwest and West regions, which have the greatest potential for sites to measure elevated cumulative, seasonal O_3 exposures without the occurrence of elevated daily

maximum 8-hour average O_3 concentrations, exhibited the greatest response in W126 value change per unit change in 4th high metric (Wells, 2014, Table 6).

The technical memorandum concludes that the 4th high metric and a three-year average W126 metric are highly correlated, as are the relative changes in these two metrics over the past decade. In this way, the technical memorandum concludes that that future control programs designed to help meet a revised primary O_3 standard based on the three-year average of the 4th highest daily maximum 8-hour concentration are expected to also result in decreases in the values of a three-year average W126 metric.

The above information suggests that depending on the level for a standard of the current averaging time and form, the current form and averaging time of the secondary standard can be expected to achieve control of cumulative seasonal O_3 exposures, providing air quality that may meet specific three-year average W126 index values. As discussed above, we recognize limitations in the dataset and associated analyses, including those related to monitor coverage, which may contribute uncertainties to conclusions related to the relationships described. With respect to monitor coverage, the current O_3 monitoring network is urban focused, with fewer monitors in some parts of the country, particular rural areas of the southwestern and western U.S. Because of this, there are potential uncertainties in the extent to which the monitoring information discussed above represents air quality patterns and relationships that would occur in areas without monitors. There is some information suggesting that there is a potential for inconsistencies in the relationship between W126 measures of seasonal O_3 concentrations and the fourth highest peak O_3 concentrations assessed by the current standard averaging time and form, but the available data suggest that air quality in areas meeting a standard of the current form and averaging time with a level in the range of 65 to 70 ppb would also meet a three-year

W126 index value falling in the range of 13 to 17 ppm-hrs, and that to the extent areas need to take action to attain a primary standard in the range of 65 to 70 ppb, those actions would also improve air quality as measured by the W126 metric.[226] To the extent to which the monitoring data can be expected to describe future relationships in air quality, we acknowledge potential uncertainties in specifying future air quality but note that these uncertainties are limited by the fact that the data analysis includes over a decade of O_3 measurements, with similar patterns and trends observed in air quality over this period of time.

5. Administrator's Proposed Conclusions

In considering what revisions to the secondary standard are appropriate, the Administrator has drawn on the ISA conclusions regarding the weight of the evidence for a range of welfare effects associated with O_3 in ambient air, and associated areas of uncertainty; quantitative risk and exposure analyses in the WREA for different adjusted air quality scenarios and associated limitations and uncertainties; staff evaluations of the evidence, exposure/risk information and air quality information in the PA; additional air quality analyses of relationships between air quality metrics based on form and averaging time of the current standards and a cumulative seasonal exposure index; and CASAC advice; and, public comments received thus far in the review.

As described in section IV.E.1 above, the Administrator concludes it is appropriate to continue to use O_3 as the indicator for a secondary standard intended to address adverse effects to public welfare associated with exposure to O_3 alone and in combination with related

[226] EPA notes that areas can be expected to have air quality at least as good as that specified by the primary standard, so to the extent there are inconsistencies between fourth highest peak concentrations and W126 values such that some areas meeting a standard of 0.065 to 0.070 ppm might be well below the range of 13 to17 ppm-hours, those inconsistencies are less relevant to consideration of the appropriate form and level for the secondary standard.

photochemical oxidants. In this review, no alternatives to O_3 have been advanced as being a more appropriate surrogate for ambient photochemical oxidants. Thus, as is the case for the primary standard (discussed above in section II.E.1), the Administrator proposes to continue to use O_3 as the indicator for a standard that is intended to address effects associated with exposure to O_3 alone and in combination with related photochemical oxidants. In so doing, the Administrator recognizes that measures leading to reductions in ecosystem exposures to O_3 would also be expected to reduce exposures to other photochemical oxidants.

The Administrator has next considered the array of information with regard to identifying policy options for a revised secondary standard for O_3 that in her judgment would provide appropriate protection for public welfare effects associated with O_3 in ambient air. This information includes ISA conclusions, WREA analysis findings, staff considerations and conclusions in the PA and CASAC advice, as well as the Administrator's conclusions in the last review, with regard to a biologically relevant exposure metric for O_3 vegetation-related effects. The information also includes PA conclusions and CASAC advice with regard to key aspects of the definition of such a metric, as summarized in section IV.E.2 and IV.E.3 above. Additionally, the Administrator has considered findings of staff evaluations in the PA with regard to potential impacts on vegetation and forested ecosystems associated with a range of values for such a metric and identified uncertainties and limitations of such information, as summarized in section IV.E.2 above. Additionally important to her deliberations here are findings of air quality analyses of relationships between the W126-based exposure metric and levels of a standard of the same form and averaging time as the current standards, as described in section IV.E.4 above. Based on consideration of this array of information, as described below, the Administrator has drawn conclusions with regard to policy options for a revised secondary standard. In drawing

conclusions on such options, she recognizes that the Act does not require that NAAQS be set at zero-risk or background levels, but rather at levels that reduce risk sufficiently to protect public welfare from adverse effects.

As an initial matter, the Administrator recognizes the longstanding evidence, described in the ISA, of O_3 effects on vegetation and associated terrestrial ecosystems. Further, in reaching a proposed conclusion on the appropriate form and averaging time for a revised secondary standard that would provide increased protection against vegetation-related effects on public welfare, the Administrator takes note of the conclusions drawn in the ISA, the PA and by CASAC in this review that the scientific evidence continues to demonstrate the cumulative nature of O_3-induced plant effects and the need to give greater weight to higher concentrations, as summarized in sections IV.B.1, IV.D.1, IV.D.2, IV.E.2.a and IV.E.3 above. Based on these considerations, the Administrator concurs with the CASAC that a cumulative, seasonal, concentration-weighted exposure-based form and averaging time provides the most direct link between O_3 in ambient air and O_3-related effects on vegetation. The Administrator further concludes that in judging the extent of public welfare protection that might be afforded by a revised standard, it is appropriate to use a cumulative, seasonal concentration-weighted metric.

In identifying a cumulative, seasonal, concentration-weighted metric for use in judging public welfare protection, the Administrator gives weight to the PA conclusions regarding consideration of a revised secondary standard in terms of the cumulative, seasonal, concentration-weighted form, the W126 index. As described in section IV.B.1 above, the ISA has recognized the strength of the W126 index in its weighting of potentially damaging O_3 concentrations that contributes to the advantages it offers over other weighted cumulative indices. The Administrator notes the PA conclusions regarding the W126 metric, specifically use

of the three consecutive month period within the O_3 season with the maximum index value as the seasonal period over which to cumulate hourly O_3 exposures and the cumulation of daily exposures for the 12-hour period from 8:00 am to 8:00 pm. The Administrator additionally takes note of CASAC support for consideration of the W126 index defined in this way and concludes it is appropriate to use the cumulative seasonal W126-based metric derived in this way.

In further considering the PA conclusions regarding a revised secondary standard in terms of the W126 index, the Administrator takes note of considerations in the PA of a three-year or single-year evaluation period. Such considerations include the variability in ambient air O_3 concentrations from year to year, as well as variability and uncertainties related to environmental factors that influence the occurrence and magnitude of O_3-related effects. The Administrator additionally notes the PA observation of greater significance for effects associated with multiple-year exposures. Based on these and related considerations described in the PA (and summarized in section IV.E.2 above), the Administrator, in identifying a metric for use in judging public welfare protection afforded, agrees with the PA conclusion that it is appropriate to consider a form that averages W126 index values across three consecutive years, and to do so in conjunction with identification of levels for such a form that might be judged to provide the appropriate degree of public welfare protection from O_3 effects across multiple years. In so doing, the Administrator takes note of the ISA conclusions regarding the role of environmental factors in variability associated with effects of ambient air O_3 and the year-to-year variability commonly observed in such environmental factors. Further, the Administrator also recognizes uncertainties associated with determining the degree of vegetation impacts for annual effects that would be adverse to public welfare. Even in the case of annual crops, the assessment of public welfare significance is unclear for the reasons discussed below related to agricultural practices.

The considerations identified here lead the Administrator to conclude it is appropriate to use an index averaged across three years.

In reaching this conclusion regarding a three-year average metric, the Administrator has considered CASAC comments that it favors a W126-based secondary standard with a single year form and that its recommended range of levels relates to such a form. The Administrator concurs with CASAC that it is important to consider impacts associated with a single year that may be of a magnitude concluded to represent an adverse effect on public welfare. The Administrator further concludes that such an occurrence can be addressed through use of a three-year average metric, chosen with consideration of the relevant factors. As noted above, the Administrator gives consideration to the variabilities, as well as the uncertainties, associated with single year and multiple year impacts. Based on all of these considerations, the Administrator recognizes greater confidence in judgments related to public welfare impacts based on a three-year average metric.

Thus, based on all of the above, the Administrator proposes, for purposes of judging the extent of public welfare protection that might be afforded by a revised standard and whether it meets the appropriate level of protection, to use the average W126 index value across three years, with each year's value identified as that for the three-month period yielding the highest seasonal value and with daily O_3 exposures within a three-month period cumulated for the 12-hour period from 8:00 am to 8:00 pm.

In reaching a conclusion on the appropriate range of W126 index values that describe the O_3 conditions expected to provide the requisite protection of public welfare, the Administrator has given careful consideration to the following: (1) the nature and degree of effects of O_3 to the public welfare, including what constitutes an adverse effect; (2) the strengths and limitations of

the evidence that is available regarding known or anticipated adverse effects from cumulative, seasonal exposures, and its usefulness in informing selection of a proposed range; and (3) CASAC's views regarding a range of W126 levels appropriate to consider, as well as on the strength of the evidence and its adequacy to inform a range of levels. In this consideration, the Administrator recognizes that the choice of a range of W126 index values (and the form of the W126 index) that might be expected to provide protection of the public welfare from any known or anticipated adverse effects requires judgments about the interpretation of the evidence and other information, such as the quantitative analyses of air quality monitoring, exposure and risk, that neither overstates nor understates the strengths and limitations of the evidence and information nor the appropriate inferences to be drawn as to risks to public welfare. The CAA does not require that a secondary standard be protective of all effects associated with a pollutant in the ambient air but rather those considered adverse to the public welfare (as described in section IV.B.2 above). The Administrator additionally recognizes that there is not a bright line clearly directing the choice of a range of W126 index values and that the choice of what is appropriate is a public welfare policy judgment entrusted to the Administrator.

In determining the range of three-year average W126 index values that might be expected to provide the appropriate level of public welfare protection, the Administrator first considers the nature and degree of effects of O_3 on the public welfare. The Administrator recognizes that the significance to the public welfare of O_3-induced effects on sensitive vegetation growing within the U.S. can vary, depending on the nature of the effect, the intended use of the sensitive plants or ecosystems, and the types of environments in which the sensitive vegetation and ecosystems are located. Any given O_3-related effect on vegetation and ecosystems (e.g., biomass loss, visible foliar injury), therefore, may be judged to have a different degree of impact on the public

depending, for example, on whether that effect occurs in a Class I area, or a residential or commercial setting. The Administrator notes that such a distinction is supported by CASAC advice in this review. In her judgment, like those of the Administrator in the last review, it is appropriate that this variation in the significance of O_3-related vegetation effects should be taken into consideration in making judgments with regard to the level of ambient O_3 concentrations that is requisite to protect the public welfare from any known or anticipated adverse effects. As a result, the Administrator concludes that of those known and anticipated O_3-related vegetation and ecosystem effects identified and discussed in this notice, particular significance should be ascribed to those that occur on sensitive species that are known to or are likely to occur in federally protected areas such as Class I areas[227] or on lands set aside by States, Tribes and public interest groups to provide similar benefits to the public welfare, for residents on those lands, as well as visitors to those areas.

Likewise, the Administrator also notes that the same known or anticipated O_3-induced effects occurring in other areas may call for less protection. For example, the maintenance of adequate agricultural crop yields is extremely important to the public welfare and is currently achieved through the application of intensive management practices. With respect to commercial production of commodities, the Administrator notes that judgments about the extent to which O_3-related effects on commercially managed vegetation are adverse from a public welfare perspective are particularly difficult to reach, given that the extensive management of such

[227] For example, the Wilderness Act of 1964 defines designated ''wilderness areas'' in part as areas "protected and managed so as to preserve [their] natural conditions" and requires that these areas ''shall be administered for the use and enjoyment of the American people in such manner as will leave them unimpaired for future use and enjoyment as wilderness, and so as to provide for the protection of these areas [and] the preservation of their wilderness character.''16 U.S.C. §1131(a).

vegetation (which, as CASAC noted, may reduce yield variability) may also to some degree mitigate potential O_3-related effects. The management practices used on these lands are highly variable and are designed to achieve optimal yields, taking into consideration various environmental conditions. In addition, changes in yield of commercial crops and timber may affect producers and consumers differently, further complicating the question of assessing overall public welfare impacts. Thus, the Administrator concludes that agricultural crops do not have same need for additional protection from the NAAQS as forested ecosystems and, while research on agricultural crop species remains useful in illuminating mechanisms of action and physiological processes, information from this sector on O_3-induced effects is considered less useful in informing judgments on what level(s) would be sufficient but not more than necessary to protect the public welfare. The CASAC identified a crop RYL benchmark of 5% for the median species and indicated they found higher percentages unacceptably high. Although the Administrator has not drawn a conclusion with regard to this specific benchmark, the Administrator finds the public welfare impacts associated with crop yield loss to be a less important consideration in this review for the reasons discussed here, including the extensive management of crop yields and the dynamics of agricultural markets, and thus is not focusing on crop yield loss in selecting a revised standard. She notes, however, the PA finding that median species crop RYL estimates for W126 index values in the PA identified range (17 to 7 ppm-hrs) fall below the 5% benchmark emphasized by CASAC for this endpoint. The Administrator also notes that a standard revised to increase protection for forested ecosystems would also be expected to provide some increased protection for agricultural crops.

The Administrator also recognizes that O_3-related effects on sensitive vegetation can occur in other areas that have not been afforded special federal protections, ranging from effects

on vegetation growing in managed city parks and residential or commercial settings, such as ornamentals used in urban/suburban landscaping or vegetation grown in land use categories that are heavily managed for commercial production of commodities such as timber. For vegetation used for residential or commercial ornamental purposes, the Administrator believes that there is not adequate information at this time to establish a secondary standard based specifically on impairment of these categories of vegetation, but notes that a secondary standard revised to provide protection for sensitive natural vegetation and ecosystems would likely also provide some degree of protection for such vegetation.

Based on the above, the Administrator finds that the type of information most useful in informing the selection of an appropriate range of protective levels is appropriately focused on information regarding exposures and responses of sensitive trees and other native species known or anticipated to occur in protected areas such as Class I areas or on lands set aside by States, Tribes and public interest groups to provide similar benefits to the public welfare, for residents on those lands, as well as visitors to those areas.

With regard to the available evidence, the Administrator finds the coherence and strength of the weight of evidence from the large body of available literature compelling. This evidence addresses a broad array of O_3-induced effects on a variety of tree species across a range of growth stages (i.e., seedlings, saplings and mature trees) using diverse field-based (e.g., free air, gradient and ambient) and OTC exposure methods. The Administrator gives particular attention to the effects related to native tree growth and productivity, recognizing their relationship to a range of ecosystem services, including forest and forest community composition.

With regard to selection of the values for use with the W126 index for the purpose of identifying a range of O_3 conditions expected to provide the appropriate level of protection from

vegetation effects of particular concern, the Administrator, as an initial matter, takes note of the PA conclusion that, with regard to a target level of protection for a revised standard, it is appropriate to give consideration to a range of levels from 17 ppm-hrs to 7 ppm-hrs, expressed in terms of the W126 index averaged across three consecutive years. As summarized in section IV.E.2.b above, this PA conclusion draws heavily on considerations related to estimates of tree seedling growth impacts (in terms of relative biomass loss) associated with a range of W126-based index values developed from the robust E-R functions for 11 tree species. This conclusion also gives weight to CASAC comments as to an unacceptably high magnitude of relative biomass loss (6%) for the median species and a magnitude of median relative biomass loss on which to focus considerations (2%). The Administrator takes particular note of the CASAC view of a median species RBL of 6% as unacceptably high.

In considering the basis for the range of W126 index levels identified by the PA, for which 17 ppm-hrs is the upper end, the Administrator considers the CASAC advice, including their view that a 6% median tree seedling species RBL is unacceptably high, their consideration of Table 6-1 in the second draft PA which indicated such a RBL estimate for a W126 index value of 17 ppm-hrs, and their consequent lack of support for levels higher than 15 ppm-hrs (Frey, 2014c, p. iii; U.S. EPA 2014j, Table 6-1). As noted in section IV.E.3 above, revisions to this table in the final PA, made in consideration of CASAC comments have resulted in changes to the median species RBL estimates such that the median species RBL estimate for a W126 index value of 17 ppm-hrs in this table in the final PA (5.3%) is nearly identical to the median species estimate for 15 ppm-hrs (the value corresponding to the upper end of the CASAC-identified range) in the second draft PA (5.2%) (U.S. EPA, 2014c, Table 6-1; U.S. EPA, 2014j, Table 6-1).

The Administrator additionally takes note of the PA observations that the number and proportion of individual species with RBL estimates at or below 2%, a benchmark given emphasis by CASAC, do not vary across W126 index values from 17 ppm-hrs down to 9 ppm-hrs (as seen in Table 8 above), providing little distinction with regard to the significance of growth impacts for exposures across this large portion of the PA range. The Administrator also notes the CASAC recommendation regarding a lowering of the level with consideration of a three-year average index; however, the Administrator's judgments on a three-year average index, as described above, focus on confidence in conclusions that might be drawn with regard to single as compared to multiple year impacts. For example, the Administrator, while recognizing the strength of the evidence with regard to quantitative characterization of O_3 effects on growth of tree seedlings and crops, in addition to noting the additional difficulties for assessing welfare impacts of crops, takes note of the uncertainty associated with drawing conclusions with regard to the extent to which small percent reductions in annual growth contribute to adverse effects on public welfare and the role of annual variability in environmental factors that affect plant responses to O_3. Moreover, as explained above, the Administrator concludes that concerns related to the possibility of a singly unusually damaging year can be addressed through use of a three-year average metric, chosen with consideration of the relevant factors. Accordingly, she judges it appropriate to include 17 ppm-hrs, without adjustment, in the range of three-year average W126 index values appropriate to consider in determining what secondary standard will provide air quality associated with the appropriate level of public welfare protection. She thus judges it appropriate to focus on a range for three-year average W126 levels with 17 ppm-hrs at the upper end. In so doing, she additionally notes CASAC's recognition that, within a

scientifically appropriate range, the choice of levels is a public policy judgment by the Administrator.

In turning to consideration of the low end for the W126 index range, the Administrator considers the full range of W126 levels identified in the PA with regard to the evidence and exposure/risk-based information, and associated uncertainties, identified in the PA, as well as CASAC advice. The Administrator notes the CASAC policy view regarding protection provided for trees and associated ecosystem services from a W126 index value of 7 ppm-hrs, which is based on the W126 index value for which the median species estimate falls below 2% RBL. The Administrator recognizes, however, as noted above, the greater uncertainty associated with the extent to which estimates of benefits in terms of ecosystem services and reduced effects on vegetation at lower O_3 exposures might be judged significant to the public welfare.

The Administrator additionally notes the results of the EPA's quantitative exposure and risk assessments for the air quality scenarios for W126 levels at and below 11 ppm-hrs, including the relatively small additional benefits and increased uncertainty with the ecosystem services estimates in these lower W126 scenarios. With regard to the PA evaluation of RBL estimates, the Administrator, while noting the PA observations of similarity in the number of species with less than 2% RBL across the W126 range from 17 to 9 ppm-hrs, as stated above, additionally notes PA observations of a similar number of studied species with RBL estimates below 5% for W126 index values of 13 and 11 ppm-hrs. Thus, to the extent that weight is given to the importance of 5% RBL for individual species, both W126 index values are observed to provide RBL estimates below this benchmark.

With regard to considerations of O_3 effects beyond biomass loss in tree seedlings, the Administrator takes note of the lack of new quantitative E-R relationships for larger trees

growing in the field that would help inform consideration of a standard level within the lower part of PA range. Thus, the Administrator recognizes that important uncertainties remain in interpreting the quantitative O_3-related growth effects for tree seedlings assessed in OTC studies for the purpose of characterizing long-term growth effects, and other more subtle but important effects on sensitive tree species, natural forests, and forested ecosystems in the broader context of protection of public welfare. Additionally, while the Administrator notes that there is evidence that O_3-related visible foliar injury can occur at such lower levels (below a W126 index value of 13 ppm-hrs), she recognizes, as summarized in sections IV.C.3.c and IV.D.1 above, the significant challenges in judging the extent to which such effects should be considered adverse to public welfare, in light of the variability and the lack of clear quantitative relationship with other effects on vegetation, as well as the lack of established criteria or objectives that might inform consideration of potential public welfare impacts related to this vegetation effect.

Thus, in the Administrator's judgment, focus on a three-year average W126 index value below 13 ppm-hrs would not give sufficient attention to the important uncertainties and limitations inherent in the currently available scientific evidence and in the quantitative assessments conducted for the current review. Taking into account the uncertainties that remain in interpreting the evidence, the Administrator observes that the likelihood of obtaining benefits to public welfare decreases with a standard set below a level of 13 ppm-hrs, while the likelihood of requiring reductions in ambient concentrations that go beyond those that are needed to reduce adverse impacts to public welfare increases.

Based on the above considerations and based on the entire body of evidence and information currently available, the Administrator identifies the range of three-year average W126 index values extending from 13 to 17 ppm-hrs as appropriate to consider in identifying the

ambient O_3 concentrations that would provide the appropriate level of public welfare protection. In so doing, the Administrator notes CASAC recognition that a three-year average W126 level of 13 ppm-hrs may be appropriate depending on consideration of year-to-year variability and policy considerations. Thus, based on the discussion above, and with consideration of CASAC advice on these issues, the Administrator proposes that ambient O_3 concentrations resulting in cumulative seasonal O_3 exposures of a level within the range from 13 ppm-hrs to 17 ppm-hrs, in terms of a W126 index averaged across three consecutive years, would provide the requisite protection against known or anticipated adverse effects to the public welfare. The EPA solicits comments on levels within this range.

The Administrator next turns to consideration of policy options for a revised secondary standard that would provide this level of protection. The Administrator takes note of staff conclusions that it is appropriate to consider a revised secondary standard in terms of the cumulative, seasonal, concentration-weighted form, the W126 index. Further, she gives extensive consideration to CASAC advice to set such a secondary standard. Such a standard, as mentioned above, would be directly linked to O_3 exposures to which vegetation are most responsive and thus might be expected to provide some confidence that such exposures of concern would be controlled.

In considering different policy options for a revised secondary standard, the Administrator finds it useful to consider what can be concluded from the available information with regard to relationships between air quality characterized in terms of the current form and averaging time and also in terms of the W126 metric. She has considered particularly what such analyses and relationships indicate with regard to the extent to which W126-based O_3 concentrations may be controlled by a revised secondary standard set identical to a revised

primary standard (in the range identified in section II.F above). In so doing, she considers the air quality analyses in the PA and also the analyses of more recent air quality data summarized in the EPA technical memo (described in section IV.E.4 above), focusing particularly on analyses examining the W126-based O_3 exposure achieved in locations found to meet potential alternative standards within the range of primary standards proposed in section II.F above.

Findings from these analyses of recent O_3 measurements and trends in the relationship between the current standard and the W126 metrics were substantially similar for the various time periods examined over the past decade. There is some information suggesting that there is a potential for inconsistencies in the relationship between W126 measures of seasonal O_3 concentrations and the fourth highest peak O_3 concentrations assessed by the current standard averaging time and form, but the available data suggest that air quality in areas meeting a primary standard in the range of 65 to 70 ppb would also meet a three-year W126 index value falling in the range of 13 to 17 ppm-hrs, and that to the extent areas need to take action to attain a standard in the range of 0.065 to 0.070 ppm, those actions would also improve air quality as measured by the W126 metric. The Administrator also recognizes that the relatively lesser density of monitors in rural areas, including in areas of the West and Southwest NOAA climatic regions currently meeting the current standard where O_3 W126 index values are generally higher, makes uncertain the degree to which a revised level for the current standard would provide the appropriate degree of protection for vegetation-related effects on public welfare in these areas. The Administrator takes note of the PA finding, referenced in section IV.D.3 above, that reductions in NOx emissions that occur in urban areas to attain primary standards would also have the effect of reducing downwind, rural concentrations over the season. Thus, while the

potential for underprotection may exist, depending on the specific levels chosen, the extent of such areas and of such a risk is not clear.

Based on the most recent period of monitoring data, the Administrator notes that in all areas in which the O_3 concentrations would have met a primary standard with a revised level of 70 ppb (which includes over 500 monitors distributed across all regions of U.S), the three-year average W126 index values are at or below 17 ppm-hrs. In the same areas, only 16 monitors (or less than 3% of all monitors in this group, all but one of which is located in the Southwest region) had three-year average W126 index values above 13 ppm-hrs. She further notes that in all areas in which the O_3 concentrations would have met a primary standard with a revised level of 65 ppb (which includes 220 monitors distributed across all regions of U.S), the three-year average W126 index values are at or below 13 ppm-hrs.

In considering these findings regarding cumulative seasonal O_3 exposures in areas that would have met a primary standard with a revised level within the proposed range, the Administrator also takes note of the high correlation observed between the design value for the current secondary (and primary) standard and values for the three-year average, W126 metric, as well as the high correlation in the relative changes in these two metrics based on air quality analyses of O_3 measurements from over the past decade. This finding supports a conclusion that the air quality analyses indicate that future control programs designed to reduce O_3 concentrations to help meet a revised primary O_3 standard that retains the current form and averaging time (three-year average of the 4th highest daily maximum 8-hour concentration) would also be expected to result in reductions in three-year average, W126 index values. Further, she notes the conclusion from the air quality analysis that the Southwest and West regions, which have the greatest potential for sites to measure elevated cumulative, seasonal O_3 exposures

without the occurrence of elevated daily maximum 8-hour average O_3 concentrations, exhibited the greatest response in W126 index value change per unit change in metric based on the current standard form and averaging time. While recognizing the limitations of such analyses in projections of future air quality patterns, the Administrator also notes that the time period over which the analyses focused involved emissions control programs to achieve O_3 reductions such that their findings would be expected to be informative of further similar control activities, such as those to meet a revised standard with a lower level, in the future.

Based on the findings from these analyses, the Administrator finds it appropriate to consider the policy option of retaining the form and averaging time of the current secondary standard and revising the level to within the range of 65 to 70 ppb. In such consideration, the Administrator first notes her proposed conclusion that the requisite protection from known or anticipated adverse effects to public welfare may be achieved by cumulative, seasonal, concentration-weighted O_3 concentrations characterized in terms of a W126 index value that falls within the range from 13 to 17 ppm-hrs. Her final decision on the W126 index value in this range that affords the requisite protection will be based on a series of judgments, as described above. Given the focus on tree seedling growth effects in identifying this range, such judgments will include the weight to give the evidence of specific vegetation-related effects estimated to result from W126 index values within this range, including the objectives for consideration of tree species biomass loss estimates in relationship to identified benchmarks (e.g., median species RBL of 2% and greater), the weight to give associated uncertainties, including those related to the variability in occurrence of such effects in forested areas, the associated ecosystem services including those of particular public welfare significance, and judgments on the extent to which such effects in forested areas may be considered adverse to public welfare. This final decision

will also take into account judgments with regard to the weight to give the evidence and quantitative analyses, and associated uncertainties, related to other effects of O_3 (summarized in sections IV.C, IV.D.1 and IV.E.2 above), particularly including those for which the ISA concludes causal or likely causal relationships with O_3 exposures. As noted above, a standard that provides the appropriate level of protection for growth effects would also be expected to provide additional protection for other effects including visible foliar injury, crops and carbon storage.

The Administrator notes that based on the above analyses, the proposed range of levels for a revised primary standard provide air quality, in terms of three-year average W126 index values, of a range at or below the range which the Administrator has identified for consideration with regard to the requisite public welfare protection. Thus, depending on final judgments on revisions to the primary standard and the requisite protection for the secondary standard, a revised secondary standard identical to the revised primary standard may provide sufficient protection for public welfare. Therefore, the Administrator proposes to retain the current averaging time and form of the secondary standard and revise the level to within the range of 65 to 70 ppb.

In reaching such a conclusion, the Administrator recognizes that such a strengthening of the secondary standard would be expected to provide significant additional protection for public welfare, including effects related to vegetation and associated ecosystem services (and others discussed above), over that afforded by the current secondary standard.

Thus, based on her consideration of the full range of information as described above, the Administrator judges that ambient O_3 concentrations in terms of a three-year average W126 index value within the range extending from 13 ppm-hrs to 17 ppm-hrs would provide requisite

public welfare protection. She further judges that it would be appropriate to achieve that level of air quality by retaining the existing averaging time and form, and revising the level to within the range of 65 to 70 ppb. In recognition of CASAC's recommendation and the PA conclusion with regard to a distinct secondary standard, the Administrator additionally solicits comment on the policy option of revising the form and averaging time for the secondary standard to a W126 index value, averaged across three years, with each year's value identified as that for the three-month period yielding the highest seasonal value and with daily O_3 exposures within a three-month period cumulated for the 12-hour period from 8:00 am to 8:00 pm, and a level within the range from 13 ppm-hrs to 17 ppm-hrs.

F. Proposed Decision on the Secondary Standard

The Administrator proposes to revise the level of the current secondary standard within the range of 0.065 to 0.070 ppm. The EPA solicits comments on this proposed revision of the secondary standard. Further, the EPA solicits comments on the proposed conclusion that air quality in terms of a W126 index value, averaged across three consecutive years, within the range of 13 ppm-hrs to 17 ppm-hrs would provide requisite protection against known or anticipated adverse effects to the public welfare. Additionally, the EPA solicits comments on alternative values for a three-year average W126 index for such a purpose within the range extending below 13 ppm-hrs down to 7 ppm-hrs.

The EPA also solicits comments on the alternative approach of revising the secondary standard to a cumulative, seasonal, concentration-weighted form, the W126 index based on the three consecutive month period within the O_3 season with the maximum index value, with daily exposures cumulated for the 12-hour period from 8:00am to 8:00pm and with a form that averages seasonal W126 values across three consecutive years and a level within the range of 13

to 17 ppm-hrs. The EPA additionally solicits comments on such a distinct secondary standard with a level within the range extending below 13 ppm-hrs down to 7 ppm-hrs. Further, the EPA solicits comments on retaining the current secondary standard without revision, along with the alternative views of the evidence that would support retaining the current standard.

V. Appendix U: Interpretation of the Primary and Secondary NAAQS for O_3

A. Background

The EPA is proposing to create Appendix U to 40 CFR part 50 to reflect the proposed revisions to the primary and secondary NAAQS for O_3 discussed in previous sections of this preamble. The proposed Appendix U explains the computations necessary for determining when the proposed primary and secondary O_3 NAAQS are met at an ambient air quality monitoring site, similar to Appendix P to 40 CFR part 50 which deals with interpretation of the O_3 NAAQS promulgated in 2008. Specifically, the proposed Appendix U addresses data selection requirements (section V.B), data reporting and data handling requirements (section V.C), and data completeness requirements. The EPA is proposing to maintain the data completeness requirements from the previous O_3 NAAQS.

Given that the EPA is soliciting public comment on a distinct secondary standard based on the W126 metric, section V.D of this preamble contains a discussion of additional data handling requirements that would be adopted in Appendix U in the event that the Administrator decides to set a distinct secondary standard based on public comments received.

The proposed Appendix U also provides specific requirements for the handling of data affected by exceptional events in accordance with 40 CFR 50.14. Section V.E of this preamble addresses O_3-specific deadlines related to the flagging and submission of demonstrations for exceptional event data for the proposed O_3 NAAQS.

B. Data Selection Requirements

The EPA is proposing to clarify which data are to be used in comparisons with the NAAQS. First, the EPA proposes to maintain the existing regulatory requirements that only O_3 data collected by a federal reference method specified in Appendix D to 40 CFR part 50, or an equivalent method designated in accordance with 40 CFR part 53, and meeting all applicable monitoring requirements listed in 40 CFR part 58, are eligible for comparison to the proposed O_3 NAAQS.

Second, the EPA is proposing in Appendix U that O_3 design values are to be calculated on a site-level basis. Past practice has been to calculate a design value for each individual O_3 monitor. However, this practice could be viewed as inconsistent with the stated purpose of the previous O_3 data handling appendix, which is to determine "whether the national 8-hour primary and secondary ambient air quality standards for ozone (O_3) specified in §50.15 are met at an ambient O_3 air quality monitoring *site*." (40 CFR part 50, Appendix P, section 1 (emphasis added)). Given the level of consistency in the measurement data obtained across the various federal reference and equivalent O_3 monitoring instruments currently in operation (U.S. EPA, 2013a, section 3.5.2.1), the EPA believes that it would be appropriate to combine data across O_3 monitors operating at the same site. Therefore, the EPA is proposing an analytic approach for combining data collected from multiple O_3 monitors at a site in order to obtain a single set of hourly O_3 concentration data for each site.

The proposed approach allows the monitoring agencies to designate one monitor as the "primary monitor" for each site. In the absence of a primary monitor designation, the primary monitor would default to the monitor with the most complete hourly dataset in each year. Once a primary monitor has been determined for the site, missing hourly O_3 concentrations for the

primary monitor would be substituted from any other monitors at the site. In the event of three or more monitors operating at the same site, missing hourly O_3 concentrations for the primary monitor would be substituted with hourly values averaged across the other monitors. The EPA notes that at the time of this proposal, there were approximately 20 sites operating two monitors simultaneously, and no O_3 sites operating three or more monitors simultaneously. This proposed approach for combining data across monitors at a site is consistent with the existing approach described in Appendix N to Part 50 for the $PM_{2.5}$ NAAQS. The EPA invites public comment on the scientific validity of combining data across O_3 monitors, and the merits of the proposed approach for combining data across multiple O_3 monitors at a site.

Third, the EPA proposes to maintain the existing practice of combining data from nearby monitoring sites in order to determine a valid design value, known as a "site combination". Site combinations typically involve situations where sites have been replaced or relocated a short distance away, and the monitoring agency wishes to combine the data from the two sites in order to maintain a continuous data record. The EPA regional offices have approved over 100 site combinations for O_3 since the promulgation of the 1997 O_3 NAAQS. The EPA has maintained records of approved site combinations, but these records are not easily accessible by the public.

The EPA proposes to replace the current procedure for approving O_3 site combinations with a more formal procedure in Appendix U, which would allow states to submit site combination requests to the appropriate Regional Administrator. Site combinations may be approved by the Regional Administrator, after he or she has determined that the measured air quality concentrations do not differ substantially between the two sites. In order to make this determination, the Regional Administrator may request additional information from the states,

including detailed information on the locations and distance between the two sites, levels of ambient concentrations measured at the two sites, and local emissions or meteorology data.

In order to improve transparency, the EPA will make records of all approved site combinations available in their Air Quality System (AQS) database, and will update design value calculations in AQS so that approved site combinations are implemented. The EPA invites public comment on the merits of the proposed process for approving site combinations in order to obtain valid design values for the O_3 NAAQS.

C. Data Reporting and Data Handling Requirements

The EPA is proposing to maintain the requirement that hourly O_3 concentration data be reported in parts per million (ppm) to three decimal places. Any decimal digits reported beyond three decimal digits will be truncated, consistent with past practice (40 CFR part 50, Appendix P, section 2.1) and the typical measurement uncertainty associated with most O_3 monitoring instruments. The proposed Appendix U clarifies that hourly O_3 concentrations are to be reported in Local Standard Time (LST), consistent with how the values are currently stored in AQS.

The EPA is proposing to maintain the existing procedures for calculating moving 8-hour averages from the hourly O_3 data (40 CFR part 50, Appendix P, section 2.1), with one minor exception. In instances where fewer than six hourly O_3 concentrations are available during an 8-hour period (i.e. less than 75% completeness), the EPA is proposing to substitute zero (i.e. 0.000 ppm) instead of one half of the O_3 monitoring instrument's minimum detectable limit (MDL) for the missing concentration values to determine if the resulting 8-hour average is greater than the level of the NAAQS. The purpose of this "data substitution test" is to identify any 8-hour periods that do not meet the requirements for a valid 8-hour average, but have reported concentrations that are so high that the NAAQS is exceeded even when substituting low values for the missing

concentrations. The EPA believes that a constant substitution value of zero is preferable to 1/2 MDL, which may vary across O_3 monitoring instruments. The MDL value for most O_3 monitoring instruments is 0.005 ppm, and the 1/2 MDL value is 0.002 ppm (with truncation); thus, in practice, the difference is slight. The EPA notes that a value of zero micrograms per cubic meter (ug/m^3) is used in data substitution tests for 24-hour average $PM_{2.5}$ concentrations, as specified in Appendix N to 40 CFR part 50. The EPA invites public comment on the merits of using zero instead of 1/2 MDL for the 8-hour average data substitution test.

The EPA is proposing new procedures for determining daily maximum 8-hour average O_3 concentrations. Past practice allows for daily maximum 8-hour average O_3 concentrations from two consecutive days to have some hours in common (40 CFR part 50, Appendix P, section 2.1). One implication of this is that an O_3 site may be counted as having exceeded the NAAQS on two distinct days based on two 8-hour periods having up to 7 hours in common. Theoretically, this could result in an annual fourth-highest value greater than the NAAQS based on high overnight O_3 concentrations occurring only twice during the year.

The EPA performed an analysis based on ambient O_3 concentration data from 2004 to 2013 (Wells, 2014b), which showed that at least one instance of overlapping daily maximum 8-hour averages occurred at 99.5% of O_3 sites during that time period. Overlapping daily maximum 8-hour averages were infrequent at most sites, but in some cases, these values occurred quite regularly (up to 60 times per year). Overlapping daily maximum 8-hour averages contributed to additional exceedances of the proposed O_3 NAAQS at 14% of sites for a level of 0.070 ppm, and at 23% of sites for a level of 0.065 ppm. In addition, 8% of sites had overlapping daily maximum 8-hour averages which contributed to a higher annual fourth-highest daily maximum value in one or more years. Finally, the analysis showed that O_3 sites located in non-

urban areas affected by long-range transport, especially those sites at higher elevations, were most likely to have additional exceedances of the proposed O_3 NAAQS due to the occurrence of overlapping daily maximum 8-hour averages.

Based on this analysis, the EPA initially concludes that overlapping daily maximum 8-hour averages are more likely to contribute to additional exceedances of the O_3 NAAQS as the level of the standard is lowered. Therefore, the EPA is proposing a new procedure for determining daily maximum 8-hour average O_3 concentrations for the proposed NAAQS that is based on 17 consecutive 8-hour periods in each day, beginning with the 8-hour period from 7:00 AM to 3:00 PM, and ending with the 8-hour period from 11:00 PM to 7:00 AM. Given that 8-hour averages are stored in the beginning hour of each period, this corresponds to the 8-hour averages from 7:00 AM to 11:00 PM.

The rationale for the proposed approach is twofold. First, it avoids any possibility of "double counting" exceedances of the NAAQS based on 8-hour periods with one or more hours in common, while continuing to make use of all of the hourly concentration data, and keeping the calculations simple and straightforward. Second, it is more consistent with the physical processes involved in the formation and transport of ground-level O_3. Specifically, the chemical reactions involved in the formation of new ground-level O_3 require sunlight. Therefore, it is appropriate to begin the "O_3 day" at sunrise, which for simplicity is assumed to be 7:00 AM LST. Similarly, any daily maximum 8-hour averages occurring after sunset are assumed to be caused by transport of O_3 molecules which originated before sunset. Therefore, it is appropriate to end the "O_3 day" with the 8-hour period beginning at 11:00 PM and ending at 7:00 AM.

In order to accommodate the above proposed approach to the hours considered in an "O_3 day", the EPA is also proposing to modify the requirement for determining whether a daily

maximum 8-hour average O_3 concentration is valid for assessing compliance with the NAAQS (40 CFR part 50, Appendix P, section 2.1). The proposed Appendix U requires valid 8-hour averages for 13 of the 17 8-hour periods in a day in order to determine a valid daily maximum value. The requirement of 13 valid 8-hour averages was chosen because 13/17 is the smallest ratio greater than 75%, which is consistent with the long standing requirement of 75% data completeness for daily and annual NAAQS-related statistics. In addition, the EPA is proposing to maintain the existing provision allowing daily maximum 8-hour averages greater than the level of the NAAQS to be considered valid (40 CFR part 50, Appendix P, section 2.1). The EPA invites public comment on the merits of the proposed procedure for determining daily maximum 8-hour average O_3 concentrations, and the merits of the proposed daily validity criteria.

Finally, the EPA has included additional language in the proposed Appendix U codifying existing data handling procedures for the previous O_3 NAAQS. First, the proposed Appendix U maintains the provision that hourly O_3 concentrations approved under 40 CFR 50.14 as having been affected by exceptional events are to be counted as missing or unavailable when calculating 8-hour averages, and that these concentrations are to be included when determining whether the daily validity criteria have been met for a given day. Effectively, this means that it is possible for an 8-hour period affected by exceptional events to lack sufficient data to determine an 8-hour average, yet the 8-hour period may still be counted toward meeting the daily validity criteria. Second, the proposed Appendix U maintains the existing practice of including monitored days outside of the O_3 monitoring season when determining the annual fourth-highest daily maximum value. Finally, the proposed Appendix U maintains the existing practice of using only daily maximum 8-hour average values for days where the daily validity criteria have been met when determining the annual fourth-highest daily maximum value.

D. Considerations for the Possibility of a Distinct Secondary Standard

Given that the EPA is soliciting public comment on setting a distinct secondary O_3 NAAQS based on the W126 index, the EPA is including a discussion on the data handling requirements for a distinct secondary standard. In the event that the Administrator decides to set a distinct secondary O_3 standard based on the W126 index, the EPA will adopt data handling requirements for the secondary standard similar to those proposed during the reconsideration of the 2008 O_3 NAAQS in 2010 (see 75 FR 3049-3052, January 19, 2010).

Two changes would need to be made to the data handling provisions for the secondary standard proposed in 2010 in order to provide consistency with what the EPA is proposing for the primary standard in Appendix U. First, the secondary standard design value (i.e. the 3-year average of the annual W126 index) would be truncated after the decimal point, instead of being rounded to the nearest whole number. Second, paragraph 4(c)(ii) would be modified to read:

"If one or more months during the ozone monitoring seasons of three consecutive years has less than 75% data completeness, the three years shall nevertheless be used in the computation of a valid design value for the site, if, after adjusting the monthly W126 index values for the months with less than 75% data completeness by a factor of 4/3, the resulting design value is greater than the level of the standard."

E. *Exceptional Events Information Submission Schedule*

States[228] are responsible for identifying air quality data that they believe warrant special consideration, including data affected by exceptional events. States identify such data by flagging (making a notation in a designated field in the electronic data record) specific values in

[228] References to "state" are meant to include state, local and tribal agencies responsible for preparing and submitting exceptional event documentation as identified in the Exceptional Events Rule (72 FR 13560, March 22, 2007).

the AQS database. States flag the data and submit supporting documentation showing that the data have been affected by exceptional events if they wish the EPA to consider excluding the data in regulatory decisions, including determining whether or not an area is attaining the proposed revised O_3 NAAQS, if a different standard is finalized.

All states and areas of Indian country that include areas that could exceed or contribute to an exceedance of any revised O_3 NAAQS in a nearby area and could therefore be designated as nonattainment have the potential to be affected by this rulemaking. Therefore, this action applies to all states; to local air quality agencies to which a state has delegated relevant responsibilities for air quality management including air quality monitoring and data analysis; and to tribal air quality agencies, where appropriate.

The "Treatment of Data Influenced by Exceptional Events; Final Rule" (72 FR 13560, March 22, 2007), known as the Exceptional Events Rule and codified at 40 CFR 50.1, 50.14 and 51.930, contains generic deadlines for a state to submit to the EPA specified information about exceptional events and associated air pollutant concentration data. Under this generic flagging schedule in 40 CFR 50.14(c)(2)(iii), a state must initially notify the EPA that data have been affected by an event by July 1 of the calendar year following the year in which the event occurred. This is done by flagging the data in AQS and providing an initial event description. According to the generic demonstration schedule in 40 CFR 50.14(c)(3)(i), the state must also, after notice and opportunity for public comment, submit a demonstration to justify any claim within 3 years after the quarter in which the data were collected. This section of the regulation also states that if the EPA must make a regulatory decision based on the data, the state must submit all information to the EPA no later than 1 year before the decision is to be made.

These generic deadlines in the Exceptional Events Rule apply to data influencing redesignation efforts or other regulatory decisions made by the EPA after the EPA promulgates initial area designations for a new or revised NAAQS. However, these same generic deadlines in the Exceptional Events Rule may not work well with the timing of the initial area designation process and schedule under a new or revised NAAQS. Until the EPA promulgates the level and form of the NAAQS, a state does not know whether the criteria for excluding data (which are tied to the level and form of the NAAQS) were met for a given event. In some cases, the generic deadlines, especially the deadlines for flagging some relevant data, may have already passed by the time the EPA promulgates the new or revised NAAQS. This scheduling constraint could result in the EPA's being unable to consider whether an exceptional event has affected the data relied on for initial area designations and further result in an area being designated nonattainment based on data that might have been excluded as having been influenced by an exceptional event if the EPA had been able to consider it during the designation process. For this reason, the EPA has historically undertaken rulemaking as part of the NAAQS promulgation process to adjust the generic deadlines in sections 50.14(c)(2)(iii) and 50.14(c)(3)(i) of the Exceptional Events Rule to accommodate the initial area designation process and schedule under a new or revised NAAQS.

The Exceptional Events Rule at section 50.14(c)(2)(vi) indicates "when EPA sets a NAAQS for a new pollutant or revises the NAAQS for an existing pollutant, it may revise or set a new schedule for flagging exceptional event data, providing initial data descriptions and providing detailed data documentation in AQS for the initial designations of areas for those NAAQS." The EPA intends to issue its final action promulgating a revised O_3 NAAQS or determine that it is not necessary to do so in October 2015.

The CAA provides requirements regarding the schedule for initial area designations. Section 107(d)(1) of the CAA states that, "By such date as the Administrator may reasonably require, but not later than 1 year after promulgation of a new or revised national ambient air quality standard for any pollutant under section 109, the Governor of each state shall … submit to the Administrator a list of all areas (or portions thereof) in the State, designating…" those areas as nonattainment, attainment, or unclassifiable.[229] No later than 120 days prior to promulgating designations, the EPA is required to notify states of any intended modifications to their designation recommendations as the EPA may deem necessary. Section 107(d)(1)(B)(i) further provides, "Upon promulgation or revision of a NAAQS, the Administrator shall promulgate the designations of all areas (or portions thereof) … as expeditiously as practicable, but in no case later than 2 years from the date of promulgation. Such period may be extended for up to one year in the event the Administrator has insufficient information to promulgate the designations." As described in more detail in section VII.C of this proposal, the EPA intends to complete designations for any revised O_3 NAAQS promulgated in 2015 following the standard 2-year process. The EPA is required by Court Order to take final action for this O_3 NAAQS review no later than October 1, 2015. The EPA does not intend to establish a date earlier than the 1 year submission period provided in CAA section 107(d)(4); thus, state Governors (and tribes, if they choose) would be required to submit their initial designation recommendations for any revised NAAQS no later than 1 year after promulgation (i.e., by October 1, 2016, if the EPA promulgates a revised NAAQS on October 1, 2015). State Governors (and tribes, if they choose) would likely use air quality data from the years 2013 to 2015 as the basis for their

[229] While the CAA says "designating" with respect to the Governor's letter, in the full context of the CAA section it is clear that the Governor actually makes a recommendation.

recommendations. The EPA would notify states and tribes of intended modifications to their recommendations no later than June 2017 and the EPA would promulgate initial designations for any revised NAAQS in October 2017. We anticipate that the EPA's notification of intended modifications and the final designations would be based on air quality data from the years 2014 to 2016, because air quality data from 2016 is required to be certified by the state no later than May 1, 2017, and thus would be available for consideration for purposes of initial area designations by October 2017.

As indicated above, and as explained in additional detail in section VII.C of this preamble, section 107(d)(1)(B) of the CAA allows the Administrator to extend the designations schedule for up to 1 year in the event the Administrator has insufficient information to promulgate the designations for a newly promulgated NAAQS. If the EPA were to determine that it is necessary to extend the schedule for designating areas for a revised O_3 NAAQS (promulgation in October 2015) from 2017 to 2018, then it is possible that air quality data from 2017 could be considered for designations. This could raise concerns about whether influences from exceptional events in 2017 could be investigated and submitted by the state and reviewed by the EPA in sufficient time for consideration during the designation process.

For purposes of initial designations, where the EPA considers the most recent air quality monitoring data in a relatively quick timeframe, the EPA is proposing revisions to the flagging and data submission schedule in 40 CFR 50.14 applicable to the initial area designations process. The proposed exceptional events schedule is based on following a standard 2 year designation process. However, because the CAA also provides for a 3-year process in the event the Administrator has insufficient information to promulgate the designations for a newly promulgated NAAQS within 2 years and provides for the promulgation of designations as

"expeditiously as practicable," which could include accelerating the designations schedule ahead of the 2-year schedule, the proposed exceptional event schedule also includes provisions for both an accelerated designations process and a 3-year process. If the EPA were to pursue a designations schedule other than a 2- or 3-year process, the EPA would notify the state Governors of the intended date for final designations through notification letters, guidance and/or *Federal Register* notices.

These proposed revised exceptional event scheduling provisions would, if promulgated, apply to submission of information supporting claimed exceptional events affecting pollutant data for initial area designations under any new or revised NAAQS, including any revised O_3 NAAQS promulgated in October 2015. The general data flagging deadlines in the Exceptional Events Rule at 40 CFR 50.14(c)(2)(iii) and the general schedule for submission of demonstrations at 40 CFR 50.14(c)(3)(i) would continue to apply to regulatory decisions other than those related to the initial area designations process under a new or revised NAAQS. The EPA believes these proposed revisions to the exceptional events scheduling provisions will provide adequate time for states to determine whether data have been influenced by an exceptional event, to notify the EPA by flagging the relevant data and providing an initial description in AQS, and to submit documentation to support claims for exceptional events.

Therefore, using the authority provided in CAA section 319(b)(2), the EPA proposes to modify the schedule for data flagging and submission of demonstrations for exceptional events data considered for initial area designations by replacing the deadlines and information in Table 1 in 40 CFR 50.14 with the deadlines and information presented in Table 9. The EPA is also providing Table 10 to illustrate how the proposed schedule might apply to the designations process for any revised O_3 NAAQS promulgated in October 2015 or to designations processes

for future new or revised NAAQS. The EPA invites comment on these proposed changes, shown in Table 9, to the exceptional event data flagging and documentation submission deadlines for future new or revised NAAQS, including any revised O_3 NAAQS promulgated in 2015.

Table 9. Proposed Schedule for Exceptional Event Flagging and Documentation Submission for Data to be Used in Initial Area Designations

Exceptional Event / Regulatory Action	Exceptional Event Deadline Schedule[d]
Exceptional event data flagging and initial description deadline for data years 1, 2 and 3.[a]	If state and tribal initial designation recommendations for the new/revised NAAQS are due August through January, then the flagging and initial description deadline will be the July 1 prior to the recommendation deadline. If state and tribal recommendations for the new/revised NAAQS are due February through July, then the flagging and initial description deadline will be the January 1 prior to the recommendation deadline.
Exceptional event demonstration submittal deadline for data years 1, 2 and 3.[a]	No later than the date that state and tribal recommendations are due to EPA.
Exceptional event data flagging, initial description, and exceptional event demonstration submittal deadline for data year 4[b] and potential data year 5.[c]	By the last day of the month that is 1 year and 7 months after promulgation of a new or revised NAAQS, unless either option a or b applies. a. If the EPA follows a 3-year designation schedule, the deadline is 2 years and 7 months after promulgation of a new or revised NAAQS. b. If the EPA notifies the state/tribe via *Federal Register* notice, letter or guidance that it intends to complete the initial area designations process according to a schedule other than a 2-year or 3-year timeline, the deadline is 5 months prior to the date specified for final designations decisions in such EPA notification.

[a]Where data years 1, 2, and 3 are those years expected to be considered in state and tribal recommendations.
[b]Where data year 4 is the additional year of data that the EPA may consider when it makes final area designations for the new/revised NAAQS under the standard designations schedule.
[c]Where data year 5 is the additional year of data that the EPA may consider when it makes final area designations for the new/revised NAAQS under an extended designations schedule.

[d]The date by which air agencies must certify their ambient air quality monitoring data in AQS is annually on May 1 of the year following the year of data collection. The EPA cannot require air agencies to certify data prior to this date. In some cases, however, air agencies may choose to certify a prior year's data in advance of May 1 of the following year, particularly if the EPA has indicated its intent to promulgate final designations in the months of May, June, July or August. Exceptional event flagging, initial description, and demonstration deadlines for “early certified” data will follow the deadlines for “year 4” and “year 5” data.

Table 10. Examples by Month of How the Proposed Revised Schedule for Exceptional Event Flagging and Documentation Submission for Data to be Used in Initial Area Designations Would Apply

		Month of NAAQS Promulgation, State and Tribal Recommendation, and Final Designations												
Exceptional Event / Regulatory Action	**Exceptional Event Deadline Schedule[c]**	**Oct**	**Nov**	**Dec**	**Jan**	**Feb**	**Mar**	**Apr**	**May[d]**	**Jun[d]**	**Jul[d]**	**Aug[d]**	**Sep**	**Oct**
		Oct 2015	**Nov 2015**	**Dec 2015**	**Jan 2016**	**Feb 2016**	**Mar 2016**	**Apr 2016**	**May 2016**	**Jun 2016**	**Jul 2016**	**Aug 2016**	**Sep 2016**	**Oct 2016**
Exceptional event data flagging and initial description deadline for data years 1, 2, and 3.[a]	If state and tribal recommendations for the new/revised NAAQS are due August through January, then the flagging and initial description deadline will be the July 1 prior to the recommendation deadline. If state and tribal recommendations for the new/revised NAAQS are due Feb through July, then the flagging and initial description deadline will be the January 1 prior to the recommendation deadline.	July 1, 2016 (data years 2013, 2014, 2015)	July 1, 2016 (data years 2013, 2014, 2015)	July 1, 2016 (data years 2013, 2014, 2015)	July 1, 2016 (data years 2013, 2014, 2015)	Jan 1, 2017 (data years 2013, 2014, 2015)	Jan 1, 2017 (data years 2013, 2014, 2015)	Jan 1, 2017 (data years 2013, 2014, 2015)	Jan 1, 2017 (data years 2013, 2014, 2015)	Jan 1, 2017 (data years 2014, 2015, 2016)	Jan 1, 2017 (data years 2014, 2015, 2016)	July 1, 2017 (data years 2014, 2015, 2016)	July 1, 2017 (data years 2014, 2015, 2016)	July 1, 2017 (data years 2014, 2015, 2016)
Exceptional event demonstration submittal deadline for data years 1, 2, and 3.[a]	No later than the date that state and tribal recommendations are due to EPA.	by Oct 2016 (data years 2013, 2014, 2015)	by Nov 2016 (data years 2013, 2014, 2015)	by Dec 2016 (data years 2013, 2014, 2015)	by Jan 2017 (data years 2013, 2014, 2015)	by Feb 2017 (data years 2013, 2014, 2015)	by Mar 2017 (data years 2013, 2014, 2015)	by Apr 2017 (data years 2013, 2014, 2015)	by May 2017 (data years 2013, 2014, 2015)	by June 2017 (data years 2014, 2015, 2016)	by July 2017 (data years 2014, 2015, 2016)	by Aug 2017 (data years 2014, 2015, 2016)	by Sep 2017 (data years 2014, 2015, 2016)	by Oct 2017 (data years 2014, 2015, 2016)
AQS Q&A and data certification	Annually on May 1 of the year following the year of data collection	May 1	May 1	May 1	May 1	May 1	May 1	May 1	May 1	May 1	May 1	May 1	May 1	May 1
Exceptional event data flagging, initial description, and exceptional event demonstration submittal deadline for data year 4[b] and potential data year 5.[c]	By the last day of the month that is 1 year and 7 months after promulgation of a new or revised NAAQS, unless either option a or b applies. a. If the EPA follows a 3 year designation schedule, the deadline is 2 years and 7 months after promulgation of a new or revised NAAQS. b. If the EPA notifies the state/tribe via *Federal Register* notice, letter or guidance that it intends to complete the initial area designations process according to a schedule other than a 2-year or 3-year timeline, the deadline is 5 months prior to the date specified for final designations decisions in such EPA notification.	by May 31, 2017 (data year 2016)	by June 30, 2017 (data year 2016)	by July 31, 2017 (data year 2016)	by Aug 31, 2017 (data year 2016 and potentially 2017)	by Sep 30, 2017 (data year 2016 and potentially 2017)	by Oct 31, 2017 (data year 2016 and potentially 2017)	by Nov 30, 2017 (data year 2016 and potentially 2017)	by Dec 31, 2017 (data year 2016 and potentially 2017)	by Jan 31, 2018 (data year 2017)	by Feb 28/29, 2018 (data year 2017)	by Mar 31, 2018 (data year 2017)	by Apr 30, 2018 (data year 2017)	by May 31, 2018 (data year 2017)
State & Tribal Recommendations to EPA		**Oct 2016**	**Nov 2016**	**Dec 2016**	**Jan 2017**	**Feb 2017**	**Mar 2017**	**Apr 2017**	**May 2017**	**June 2017**	**July 2017**	**Aug 2017**	**Sep 2017**	**Oct 2017**

EPA notifies States/Tribes of intended modifications to recommendations (RAs send 120-day letters)	**June 2017**	**July 2017**	**Aug 2017**	**Sep 2017**	**Oct 2017**	**Nov 2017**	**Dec 2017**	**Jan 2018**	**Feb 2018**	**Mar 2018**	**Apr 2018**	**May 2018**	**June 2018**
Administrator Promulgates Final Designations	**Oct 2017**	**Nov 2017**	**Dec 2017**	**Jan 2018**	**Feb 2018**	**Mar 2018**	**Apr 2018**	**May 2018**	**June 2018**	**July 2018**	**Aug 2018**	**Sep 2018**	**Oct 2018**

a - Where data years 1, 2, and 3 are those years expected to be considered in state and tribal recommendations.

b - Where data year 4 is the additional year of data that the EPA may consider when it makes final area designations for the new/revised NAAQS.

c - Where data year 5 is the additional year of data that the EPA may consider when it makes final area designations for the new/revised NAAQS under an extended designations schedule.
d -The date by which air agencies must certify their ambient air quality monitoring data in AQS is annually on May 1 of the year following the year of data collection. The EPA cannot require air agencies to certify data prior to this date. In some cases, however, air agencies may choose to certify a prior year's data in advance of May 1 of the following year, particularly if the EPA has indicated its intent to promulgate final designations in the months of May, June, July or August. Exceptional event flagging, initial description, and demonstration deadlines for "early certified" data will follow the deadlines for "year 4" and “year 5” data.

Additionally, in conjunction with proposing exceptional event schedules related to implementing any revised O_3 standards, the EPA is also proposing to remove obsolete regulatory language associated with exceptional event schedules for historical standards. The EPA expects to propose additional revisions to the Exceptional Events Rule in a future notice and comment rulemaking effort and will solicit public comment on other, non-schedule related, aspects of the Exceptional Events Rule at that time.

VI. Ambient Monitoring Related to Proposed O_3 Standards

A. Background

The EPA is proposing to: revise the state-by-state O_3 monitoring seasons; revise the PAMS monitoring requirements; revise the FRM for measuring O_3; and revise the FEM testing requirements. The EPA is also proposing to make additional minor changes to the FEM testing requirements for NO_2 and particulate matter in part 53 as discussed below.

The EPA is proposing to extend the length of the required O_3 monitoring season in some states to be appropriate for the O_3 NAAQS revision finalized in 2008, as well as a final revised O_3 standard, if a revision is finalized in 2015.

The EPA is proposing to make changes to the PAMS monitoring requirements in 40 CFR part 58, Appendix D section 5. Section VI.C of this preamble provides background on the current PAMS monitoring requirements, recent efforts to re-evaluate the current PAMS requirements, and a summary of the proposed PAMS requirement revisions.

The EPA is proposing to revise the FRM to establish a new, additional technique for measuring O_3 in the ambient air. This new technique is based on nitric oxide-chemiluminescence (NO-CL) methodology. Because of the similarity of this new chemiluminescence technique to the existing ethylene-chemiluminescence (ET-CL) methodology, the EPA proposes that it be

incorporated into the existing O_3 FRM, using the same calibration procedure. Appendix D of 40 CFR part 50 would be revised to include both the original ET-CL as well as the new NO-CL methodology. A minor change is proposed to the existing O_3 FRM calibration procedure, which would be applicable to both of the chemiluminescence FRM methodologies. The proposed change in section 4.5.2.3 of the calibration procedure in appendix D provides for more flexibility in the range of the linearity test.

The only substantial changes proposed to the requirements of 40 CFR part 53 are in Tables B-1 and B-3 of subpart B. Table B-1 has been updated in recent years with regard to FRM and FEM methods for SO_2 (74 FR 64877, December 8, 2009) and CO (76 FR 54294, August 31, 2011) to be more consistent with current analyzer performance capabilities. Similar changes to Table B-1 are proposed here for methods for O_3. Modest changes to Table B-3 would add new interferent test concentrations specifically for NO-CL analyzers, adding a test for NO_2. Also, the table would clarify that the existing test concentrations apply to ET-CL O_3 analyzers.

In addition, the EPA is making minor additional changes to Part 53 including: conforming changes to the FEM testing requirements in Table B-1 and Figure B-5 for NO_2; extending the period of time for the Administrator to take action on a request for modification of a FRM or FEM from 30 days to 90 days; and removing an obsolete provision for manufacturers to submit Product Manufacturing Checklists for certain PM monitors.

B. Revisions to the Length of the Required O_3 Monitoring Seasons

Unlike the ambient monitoring requirements for other criteria pollutants that mandate year-round monitoring, O_3 monitoring is only required during the seasons of the year that are conducive to O_3 formation. These seasons vary in length from place to place as the conditions conducive to the formation of O_3 (i.e., seasonally-dependent factors such as ambient temperature,

strength of solar insolation, and length of day) differ by location.[230] In some locations, conditions conducive to O_3 formation are limited to the summer months of the year. For example, in states with colder climates such as Montana and South Dakota, the currently required O_3 monitoring season is four months long. However, in other states with warmer climates such as California, Nevada, and Arizona, the currently required O_3 monitoring season is year-round.[231]

Based on the O_3 NAAQS revision that was finalized in 2008, as well as the proposed NAAQS revisions discussed in this rulemaking, the EPA has determined that lengthening the O_3 monitoring seasons may be appropriate. Ambient O_3 concentrations could approach or exceed the level of the 2008 NAAQS, as well as the proposed NAAQS, more frequently and during more months of the year. The EPA has done an analysis to address the issue of whether extensions of currently required monitoring seasons are appropriate (Rice, 2014). In this analysis, we determined the number of days where one or more monitors had a daily maximum 8-hour O_3 average equal to or above 0.060 ppm in the months outside the currently-required state O_3 monitoring season using data from monitors that collected O_3 data year-round in 2010-2013.[232] We find that this level, taking into consideration reasonable uncertainty, serves as an appropriate indicator of ambient conditions that may be conducive to the formation of O_3 concentrations that approach or exceed the 2008 NAAQS or the proposed 8-hour average range of 0.065 to 0.070 ppm. Although we refer to these days as "exceedance days" in the analysis, this

[230] See 40 CFR part 58 Appendix D, section 4.1, Table D-3 for a table of required O_3 seasons.
[231] Certain states, such as California and Arizona, have approved shorter seasons for a subset of O_3 sites, based on Regional Administrator review and approval (see 40 CFR part 58, Appendix D, section 4.1(i) for the waiver authority).
[232] Approximately 800 O_3 monitors are currently operated year-round, representing greater than 50% of the total O_3 monitoring network of about 1500 monitors. They include monitors that are mandated to operate year-round due to the required O_3 season and other monitors that are voluntarily operated year-round by states and other organizations including EPA-operated monitors at Clean Air Status and Trends Network (CASTNET) sites.

0.060 ppm threshold is simply a conservative benchmark that is below the levels proposed for the revised NAAQS. Proposals for revising each state's required monitoring season are based on the observed "exceedance days" where the 8-hour average daily maximum was ≥ 0.060 ppm in and surrounding the state. The EPA considered a number of factors including out-of-season "exceedance days" either before or after the current O_3 monitoring season, the pattern of "exceedance days" in the out-of-season months, and regional consistency. We note that seasonal O_3 patterns vary year-to-year due primarily to highly variable meteorological conditions conducive to the formation of early or late season elevated O_3 concentrations in some years and not others. The EPA believes it is important that O_3 monitors operate during all periods when there is a reasonable possibility of ambient levels approaching the level of the proposed NAAQS.

The EPA reviewed the year-round, O_3 data for 2010 through 2013. A year-round monitor was identified as "year-round" if it had at least 20 daily observations in all 12 months, for at least 1 year of the 4 year period. During the 2010-2013 data period, all states operated a portion of their monitoring network outside of their required O_3 monitoring season and reported the data to the EPA Air Quality System (AQS). The EPA's analysis found the frequency of observed "exceedance days" of daily maximum 8-hour average O_3 readings of ≥ 0.060 ppm to be quite high in several states across the country in months outside of the currently required monitoring season. A total of 43 states experienced at least one "exceedance day" outside of their current O_3 season; 21 states had "exceedance days" only before the required monitoring season; 4 states had "exceedance days" only after the required monitoring season; and 18 states had "exceedance days" both before and after the required monitoring season. In some cases, the frequency of "exceedance days" before the current O_3 season was high, with four states (South Dakota,

Colorado, Wyoming, and Utah) experiencing between 31 and 230 out-of-season "exceedance days" from 2010 to 2013 at monitors operating year-round.

Basing O_3 monitoring season requirements on the goal of ensuring monitoring when ambient O_3 levels approach or exceed the level of the proposed NAAQS supports established monitoring network objectives described in Appendix D of Part 58, including the requirement to provide air pollution data to the general public in a timely manner[233] and to support comparisons of an area's air pollution levels against the NAAQS. The EPA believes that frequency of "exceedance days" in which daily maximum of 8-hour O_3 levels are observed to be greater than or equal to a threshold level of 0.060 ppm in months outside the currently required O_3 monitoring season supports the proposed lengthening of the O_3 monitoring season requirements for certain states.

The operation of O_3 monitors during periods of time when ambient levels approach or exceed the level of the proposed NAAQS ensures that persons unusually sensitive to O_3 are alerted to potential levels of health concern allowing them to take precautionary measures. The majority of O_3 monitors in the U.S. report to AIRNOW,[234] as well as to state-operated websites and automated phone reporting systems. These programs support many objectives including real-time air quality reporting to the public, O_3 forecasting programs, and the verification of real-time air quality forecast models.

The specific proposed changes to the required state O_3 monitoring seasons are detailed in the proposed changes to Table D-3 of 40 CFR part 58, Appendix D (O_3 Monitoring Season by State). Although 43 states had at least one exceedance day outside the current monitoring season,

---

[233] Public reporting requirements are detailed in 40 CFR part 58 Appendix G, Uniform Air Quality Index (AQI) and Daily Reporting.
[234] See http://airnow.gov/

changes are proposed for only 33 of those states. These proposed changes would entail an increase of 1 month for 23 states (Connecticut, Delaware, District of Columbia, Idaho, Illinois, Iowa, Kansas, Maryland, Massachusetts, Minnesota, Missouri, Nebraska, New Hampshire, New Jersey, New York, North Carolina, Ohio, Pennsylvania, Rhode Island, South Carolina, Northern Texas, Virginia, and West Virginia), an increase of one and one half months for Wisconsin, an increase of two months for four states (Indiana, Michigan, Montana, and North Dakota), an increase of four months for Florida and South Dakota, an increase of five months for Colorado, and an increase of seven months for Utah. For Wyoming, we are proposing to add three months at the beginning of the season and remove one month at the end of the season, resulting in a net increase of two months. Ozone season requirements are currently split by Air Quality Control Region (AQCR) in Louisiana and Texas. Included in the state-by-state accounting is the proposal to lengthen the required season in the northern part of Texas (AQCR 022, 210, 211, 212, 215, 217, and 218) by one month. Southern Texas O_3 monitors in AQCRs 106, 153, 213, 214, and 216 would remain on a year-round schedule. In some states with limited available data and few exceedance days outside the current season, proposed changes were made by considering regional consistency and using supporting information from the surrounding states; these changes were all minor, involving the proposed addition of 1 month to the current required season in Iowa, Missouri, and West Virginia.

The EPA solicits comment on the proposed changes to the required O_3 monitoring seasons. We note that EPA Regional Administrators have previously approved certain deviations from the required O_3 monitoring seasons through rulemakings (64 FR 3028, January 20, 1999; 67 FR 57332, September 10, 2002; and 69 FR 52836, August 30, 2004). The current ambient monitoring rule, in paragraph 4.1(i) of 40 CFR part 58 Appendix D (71 FR 61319, October 17,

2006), allows the EPA Regional Administrators to approve changes to the O_3 monitoring season without rulemaking. The EPA is retaining the rule language allowing such deviations from the required O_3 monitoring seasons in the proposed revision to paragraph 4.1(i) of 40 CFR part 58, Appendix D. The proposed changes to O_3 monitoring season requirements, if finalized, will revoke previous Regional Administrator-granted waiver approvals. As appropriate, monitoring agencies could seek new waivers. Post-final rule requests submitted along with relevant supporting information by states for monitoring season waivers from the revised requirements will be reviewed by Regional Administrators using, at a minimum, occurrences of the moderate AQI level, the frequency of out-of-season O_3 NAAQS exceedances, and regional consistency. Any deviations based on the Regional Administrator's waiver of requirements must be described in the state's annual monitoring network plan and updated in the AQS.

Current regulations permit O_3 monitors located at NCore multi-pollutant stations to be counted toward meeting minimum network monitoring requirements. The NCore network requirements were promulgated in the October 17, 2006 (71 FR 61317) revisions to ambient monitoring regulations in order to build a long-term, nationwide network that supports multiple objectives including air quality trends analyses, model evaluation, ecosystem studies, and assessment of transport between urban and rural areas. In the 2006 rulemaking, the EPA did not propose a different O_3 monitoring season for NCore stations.

NCore stations are required to operate a full suite of gaseous and particulate matter monitors as well as basic meteorology to support the objectives. Given the potential value of NCore data to support year-round scientific studies, the EPA believes that it is appropriate to require O_3 monitors at NCore stations to be operated year-round. Accordingly, the EPA proposes that the required monitoring season for NCore stations be January through December regardless

of the length of the required O_3 monitoring season for the remainder of the SLAMS (State and Local Air Monitoring Stations) monitors within a state.

The EPA has estimated the cost of the proposed changes to the O_3 seasons. The results are detailed in the EPA ICR #2313.03 and summarized in Section VIII.B., "Paperwork Reduction Act". The estimated cost is $1,668,433 which is about 7% of the total average annual cost of $24,115,182 for the national O_3 monitoring network. This estimate is based on the current requirements in 40 CFR part 58 and the proposed requirements in this rule. We note however, that greater than 50% of the monitors are currently operated year-round due to existing requirements, as well as other monitors that are voluntarily operated year-round by the states. Taking into consideration the number of year-round O_3 monitors that are operated due to existing requirements, as well as on a discretionary basis by states, the incremental cost of these proposed changes is reduced from $1,668,433 to approximately $230,000, which is less than 1% of the total average annual cost of the national O_3 monitoring network.

Considering the timing of this proposal and the final rulemaking (court ordered deadline of October 1, 2015) and associated burden on state/local monitoring agencies, we propose that implementation of the revised O_3 seasons become effective at SLAMS (including NCore sites) on January 1, 2017. The EPA is proposing to add paragraph 58.13 (g) of 40 CFR part 58 to require that monitors operating under the requirements of section 4.1 of 40 CFR part 58, Appendix D operate on the applicable required O_3 monitoring seasons effective January 1, 2017 as listed in Table D-3 of appendix D to this part. We solicit comment on whether the revised seasons could be implemented beginning January 1, 2016 for all monitors or for a subset of monitors, such as those currently operating year-round or on a schedule that corresponds to the

proposed O_3 season. If we determine, based on any such comments that implementation could occur earlier in such cases, we could proceed to final action requiring earlier implementation.

C. Revisions to the Photochemical Assessment Monitoring Stations (PAMS)

Section 182 (c)(1) of the CAA required the EPA to promulgate rules for enhanced monitoring of O_3, oxides of nitrogen, and VOCs for nonattainment areas classified as serious (or above) to obtain more comprehensive and representative data on O_3 air pollution. In addition, Section 185B of the CAA required the EPA to work with the National Academy of Sciences (NAS) to conduct a study on the role of O_3 precursors in tropospheric O_3 formation and control. In 1992, the NAS issued the report entitled, "Rethinking the Ozone Problem in Urban and Regional Air Pollution", (NAS, 1991).

In response to the CAA requirements and the recommendations of the NAS report, on February 12, 1993 (58 FR 8452), the EPA revised the ambient air quality surveillance regulations to require PAMS in each O_3 nonattainment area classified as serious, severe, or extreme ("PAMS areas"). [235] As noted in EPA's Technical Assistance Document (TAD) for Sampling and Analysis of Ozone Precursors (U.S. EPA, 1998), the objectives of the PAMS program are to: 1) provide a speciated ambient air database which is both representative and useful in evaluating control strategies and understanding the mechanisms of pollutant transport by ascertaining ambient profiles and distinguishing among various individual VOCs; 2) provide local, current meteorological and ambient data to serve as initial and boundary condition information for photochemical grid models; 3) provide a representative, speciated ambient air database which is characteristic of source emission impacts to be used in analyzing emissions

[235] Additional information on the O_3 designation process can be obtained at EPA's O_3 designations webpage at http://www.epa.gov/groundlevelozone/designations/

inventory issues and corroborating progress toward attainment; 4) provide ambient data measurements which would allow later preparation of unadjusted and adjusted pollutant trends reports; 5) provide additional measurements of selected criteria pollutants for attainment/nonattainment decisions and to construct NAAQS maintenance plans; and 6) provide additional measurements of selected criteria and non-criteria pollutants to be used for evaluating population exposure to air toxics as well as criteria pollutants.

The original PAMS requirements called for two to five sites per area depending on the area's population. Four types of PAMS sites were identified including upwind (Type 1), maximum precursor emission rate (Type 2), maximum O_3 (Type 3), and extreme downwind (Type 4) sites. Each PAMS site was required to measure O_3, NO, NO_2, speciated VOCs, selected carbonyl compounds, and selected meteorological parameters. In addition, upper air meteorological monitoring was required at one site in each PAMS area.

In the October 17, 2006 monitoring rule (71 FR 61267), the EPA revised the PAMS requirements to only require two PAMS sites per PAMS area.[236] The intent of the revision was to "allow PAMS monitoring to be more customized to local data needs rather than meeting so many specific requirements common to all subject O_3 nonattainment areas; the PAMS changes would also give states the flexibility to reduce the overall size of their PAMS programs—within limits—and to use the associated resources for other types of monitoring they consider more useful." In addition to reducing the number of required sites per PAMS area, the 2006 revisions also limited the requirement for carbonyl measurements (specifically formaldehyde, acetaldehyde, and acetone) to areas classified as serious or above for the 8-hour O_3 standard.

[236] One Type 2 site and either a Type 1 or a Type 3 site are currently required.

This change was made in recognition of carbonyl sampling issues which were believed to cause significant uncertainty in the measured concentrations.

Twenty-two areas were classified as serious or above O_3 nonattainment at the time the PAMS requirements were promulgated in 1993. On July 18, 1997 (62 FR 38856), the EPA revised the averaging time of the O_3 NAAQS from a 1-hour averaging period to an 8-hour averaging period. On June 15, 2005 (70 FR 44470), the EPA revoked the 1-hour standard in most areas of the country; however, PAMS requirements were identified as requirements that had to be retained in the anti-backsliding provisions[237] included in that action. Therefore, PAMS requirements continue to be applicable to areas that were classified as serious or above nonattainment for the 1-hour O_3 standard as of June 15, 2004. Currently, 25 areas are subject to the PAMS requirements with a total of 75 sites. As will be discussed in detail later, the current PAMS sites are concentrated in the North East and California with relatively limited coverage in the rest of the country (Cavender, 2014).

As discussed above, the first PAMS sites began operation in 1994, and have been in operation for over 20 years. Many changes have occurred during that time that have changed the O_3 problem in the U.S. as well as our understanding of it. The O_3 standard has been revised multiple times since the PAMS program was first implemented. On July 18, 1997, the EPA revised the O_3 NAAQS to a level of 0.08 ppm, with a form based on the 3-year average of the annual fourth-highest daily maximum 8-hour average O_3 concentration. On March 28, 2008 (73 FR 16436), the EPA revised the O_3 standard to a level of 0.075 ppm, with a form based on the 3-year average of the annual fourth-highest daily maximum 8-hour average O_3 concentration. These changes in the level and form of the O_3 NAAQS, along with notable decreases in O_3 levels

[237] Refer to 40 CFR part 51.905

in most parts of the U.S., have changed the landscape of the O_3 problem in the U.S. At the time of the first round of designations for the 8-hour standard (June 15, 2005), only five areas were classified as serious or above for the 8-hour standard as compared to 22 areas that were classified as serious or above for the 1-hour standard.[238] While the number of serious and above areas decreased, the number of nonattainment areas remained nearly the same. In addition, much of the equipment used at PAMS sites is old and in need of replacement. New technologies have been developed since the inception of the PAMS program that should be considered for use in the network. For these reasons, the EPA determined that it would be appropriate to re-evaluate the PAMS program and associated requirements in light of current O_3 issues.

In 2011 (U.S. EPA, 2011c), the EPA initiated an effort to re-evaluate the PAMS requirements in light of changes in the needs of PAMS data users and the improvements in monitoring technology. The EPA consulted with CASAC's, Air Monitoring and Methods Subcommittee (AMMS) to seek advice on potential revisions to the technical and regulatory aspects of the PAMS program; including changes to required measurements and associated network design requirements. The EPA also requested advice on appropriate technology, sampling frequency, and overall program objectives in the context of the most recently revised O_3 NAAQS and changes to atmospheric chemistry that have occurred over the past 10-15 years in the significantly impacted areas. The CASAC AMMS met on May 16 and May 17, 2011, and provided a report with their advice on the PAMS program on September 28, 2011 (U.S. EPA, 2011c). In addition, the EPA met multiple times with the National Association of Clean Air Agencies (NACAA) Monitoring Steering Committee (MSC) to seek advice on the PAMS

[238] PAMS requirements continue to apply to all areas classified as serious or above as of June 15, 2005 due to anti-backsliding provisions of 40 CFR 51.905.

program. The MSC includes monitoring experts from various state and local agencies actively engaged in ambient air monitoring and many members of the MSC have direct experience with running PAMS sites. As discussed in more detail in the appropriate sections below, the EPA took into consideration advice from the CASAC AMMS and the MSC in proposing changes to the PAMS requirements.

Based on the findings of the PAMS evaluation and the consultations with the CASAC AMMS and NACAA MSC, the EPA is proposing to revise several aspects of the PAMS monitoring requirements including changes in 1) network design, 2) VOC sampling, 3) carbonyl sampling, 4) nitrogen oxides sampling, and 5) upper air meteorology measurements. The following paragraphs describe the changes being proposed including the rationale for the proposed changes. Timing and other implementation issues associated with these proposed changes are discussed at the end of this section.

1. Network Design

As discussed above, the current PAMS network design calls for two sites (a Type 2, and a Type 1 or Type 3) per PAMS area. In their report (U.S EPA, 2011c), the CASAC AMMS found "that the existing uniform national network design model for PAMS is outdated and too resource intensive," and recommended "that greater flexibility for network design and implementation of the PAMS program be transferred to state and local monitoring agencies to allow monitoring, research and data analysis to be better tailored to the specific needs of each O_3 problem area." While stating that the current PAMS objectives were appropriate, the AMMS report also stated that "objectives may need to be revised to include both a national and regional focus because national objectives may be different from regional objectives." The NACAA MSC also advised

the EPA that the existing PAMS requirements were too prescriptive and may hinder state efforts to collect other types of data that were more useful in understanding their local O_3 problems.

The EPA agrees with CASAC that the PAMS objectives include both local and national objectives, and believes that the current PAMS network design is no longer suited for meeting either sets of objectives. As part of the PAMS evaluation, it was determined that at the national level the primary use of the PAMS data has been to evaluate photochemical model performance. Due to the locations of the current PAMS areas and the current network design, existing PAMS sites are clustered along the northeast and west coasts leading to significant redundancy in these areas and very limited coverage throughout the remainder of the country (Cavender, 2014). The resulting uneven spatial coverage greatly limits the value of the PAMS data for evaluation of model performance. CASAC (U.S. EPA, 2011c) noted the spatial coverage issue and advised that EPA should consider requiring PAMS measurements in areas in addition to "areas classified as serious and above for the O_3 NAAQS to improve spatial coverage." The EPA also agrees with CASAC and the NACAA that the PAMS requirements should be revised to provide monitoring agencies greater flexibility in meeting local objectives.

The EPA is proposing changes to the network design requirements that we believe will better serve both national and local objectives. The EPA is proposing a two part network design. The first part of the design includes a network of fixed sites (required PAMS sites) intended to support O_3 model development and the tracking of trends of important O_3 precursor concentrations. The second part of the network design includes monitoring agency directed Enhanced Monitoring Plans which allow monitoring agencies the needed flexibility to implement additional monitoring capabilities to suit the needs of their area.

The EPA considered a number of options to revise the fixed site portion of the network design (Cavender, 2014). An initial option considered was to require all NCore sites to make PAMS measurements regardless of O_3 attainment status. This option would take advantage of the existing NCore infrastructure and would result in a relatively wide geographic distribution of sites. However, it was noted that this option would place some PAMS measurements in areas with relatively low O_3 levels and would also result in a network of approximately 80 required sites, which would strain existing resources with a somewhat larger network than the current situation, and could make it difficult to also implement the desired state-directed Enhanced Monitoring Plans. The second option considered was to require only NCore sites in O_3 nonattainment areas to collect PAMS measurements. This option would provide the benefits discussed above for collecting PAMS measurements at existing NCore sites. This option would also reduce the total number of sites required and focus efforts in areas with higher, non-attaining, levels of O_3. The final option considered would add a population limit in addition to the consideration of O_3 attainment status at NCore sites. An illustration of this example would be a PAMS requirement that applied only to NCore sites in O_3 nonattainment areas with a population greater than a given threshold, for example, Core Based Statistical Areas with 1,000,000 people or more. This approach would continue the current practice of focusing PAMS resources in areas of elevated O_3 readings with an additional consideration that measurements in these larger population areas would be sufficient to characterize O_3 formation on a national basis.

After considering the above options as well as the comments of CASAC and NACAA, the EPA believes that an approach focused primarily on the use of the existing NCore sites in O_3 nonattainment areas provides an appropriate balance to the consideration of O_3 levels as well as population, noting that a majority of NCore sites are already located in the larger urban areas of

each state. Accordingly, the EPA is proposing to require PAMS measurements at any existing NCore site in an O_3 nonattainment area (either based on the 2008 O_3 NAAQS or the 2015 O_3 NAAQS if finalized) in lieu of the current PAMS network design requirements.[239] The NCore network is a multi-pollutant monitoring network consisting of 80 sites (63 urban, 17 rural) and is intended to support multiple air quality objectives including the development and model evaluation of photochemical models (including both $PM_{2.5}$ and O_3 models), and the tracking of regional precursor trends. NCore sites are sited in typical neighborhood scale locations which are more suitable than source impacted locations for evaluation of grid models typical of current photochemical models and tracking of trends in pre-cursor concentrations. The EPA believes NCore sites are well suited for O_3 model development and evaluation.

The proposal to require PAMS measurements at existing NCore sites in O_3 nonattainment areas would replace the existing PAMS network design.[240] This change would keep roughly the same number of required PAMS sites while improving spatial coverage (Cavender, 2014). Based on the range of the O_3 NAAQS being proposed today and current O_3 design value estimates (based on 2011-2013 air quality data), the number of required sites is estimated to be between 48 and 65, which compares to 50 currently required sites, and 75 currently operating sites. Potential redundancy in the existing network would be reduced while important network coverage in the Southeast and Midwest would be added. The improved spatial coverage will also improve the

[239] Although enhanced monitoring for O_3, oxides of nitrogen, and VOCs is specifically required for areas classified at least serious for the O_3 NAAQS by section 182(c)(1) of the CAA, the EPA has concluded that requiring enhanced monitoring for all O_3 nonattainment areas is appropriate for the purposes of monitoring ambient air quality and better understanding O_3 pollution.

[240] While the EPA is proposing to replace the multi-site design, monitoring agencies would be encouraged to identify the type of PAMS site the NCore site represents. In most cases, NCore sites would likely be classified as either a Type 2 or Type 3 site. In limited situations, rural NCore sites might be subject to these proposed requirements, in which case, these sites would likely be either Type 1 or Type 4 sites.

EPA's ability to track trends in precursor concentrations regionally. The EPA notes that in limited situations, an O_3 nonattainment area may not have an NCore site and in those cases, the area would only be subject to the requirement for an Enhanced Monitoring Plan as discussed in more detail below. The EPA believes that the network coverage provided by existing NCore sites in O_3 nonattainment areas would be adequate for the national PAMS objectives discussed above, and that requiring PAMS sites, in addition to Enhanced Monitoring Plans, in those O_3 nonattainment areas without NCore sites would not substantially improve the network coverage.

The EPA notes that the proposed network design change would provide significant cost efficiencies. By adding PAMS measurements to existing NCore sites, the PAMS network would be taking advantage of existing infrastructure and measurements currently being collected at NCore sites. NCore sites already have the larger, climate-controlled shelters that are necessary to operate the automated gas chromatographs ("auto-GCs") used to collect speciated VOCs. In addition, existing NCore sites currently collect data on many of the required PAMS measurements including O_3, CO, total reactive nitrogen (NO_y), and meteorological measurements including wind speed and direction, temperature, and relative humidity.

While the EPA believes these proposed changes will result in fixed network cost savings for the overall network on a national basis, individual monitoring agencies may see either an increase or a decrease in burden as a result of these proposed changes. Monitoring agencies in O_3 nonattainment areas who are not currently affected by the existing PAMS requirements would be required to add PAMS measurements to their existing NCore sites, while several monitoring agencies with existing PAMS sites would not be required to continue PAMS monitoring if these

proposed requirements are promulgated.[241] As discussed later in this preamble, the EPA is proposing a staggered compliance schedule for the proposed PAMS requirements in recognition of the need for capital investment and staff training at these sites.

The EPA recognizes that in limited situations, existing NCore sites may not be the most appropriate locations for making PAMS measurements. For example, an existing PAMS site in an O_3 nonattainment area may be sited at a different location than the existing NCore site. In this case, it may be appropriate to continue monitoring at the existing PAMS site to support ongoing research and to maintain trends information. To account for these situations, the EPA is also proposing to provide the EPA Regional Administrator the authority to approve an alternative location for a required PAMS sites where appropriate.

The EPA seeks comment on the network design revision proposed above, the requirement for PAMS measurements at NCore sites in O_3 nonattainment areas, and the removal of current multi-site PAMS network design requirements. The EPA also solicits comment on whether, instead of requiring PAMS measurements at all NCore sites in nonattainment areas, we should instead adopt one of the other options discussed above, for example, using both attainment status and population thresholds, that may result in a fixed PAMS monitoring network that is either smaller or larger than what will result from the proposed requirement.

The second part of the proposed PAMS network design includes monitoring agency directed enhanced O_3 monitoring activities intended to provide data needed to understand an area's specific O_3 issues. To implement this part of the PAMS network design, the EPA is proposing to add a requirement for states with O_3 nonattainment areas to develop an "Enhanced

[241] Monitoring agencies would be able to seek approval to shut down non-required PAMS sites at their discretion pursuant to the requirements detailed in 40 CFR 58.14.

Monitoring Plan." These Enhanced Monitoring Plans, which are to be submitted as part of their required Annual Monitoring Network Plan (40 CFR 58.10), would be reviewed and approved by the EPA Regional Administrator as part of the annual plan review process. The purpose of the Enhanced Monitoring Plan is to improve monitoring for ambient concentrations of O_3, NO_x/NO_y, VOCs, and meteorology. The goal of the Enhanced Monitoring Plan is to allow monitoring agencies flexibility in determining and collecting the data they need to understand their O_3 problems, consistent with this purpose and the advice obtained from the CASAC AMMS and the NACAA MSC. Types of activities that might be included in the Enhanced Monitoring Plan include (but are not limited to) additional PAMS sites (e.g., upwind or downwind sites), additional O_3 and NO_x monitoring, ozonesondes or other aloft measurements, rural measurements, mobile PAMS sites, additional meteorological measurements, and episodic or intensive studies. The savings from a smaller less costly fixed network of required PAMS sites would be available for re-investment in the development and implementation of the proposed Enhanced Monitoring Plans.

2. Speciated VOC Measurements

Measurement of speciated VOCs important to O_3 formation is a key aspect of the PAMS program. Currently, the existing PAMS requirements allow for a number of options in measuring speciated VOCs at PAMS sites which include 1) hourly measurements using an auto-GC, 2) eight 3-hour samples daily using canisters, or 3) one morning and one afternoon sample with a 3-hour or less averaging time daily using canisters plus continuous total non-methane hydrocarbon (TNMHC) measurements.

The EPA believes that the options provided for VOC measurements limit the comparative value of the data being collected, and is proposing to require instead that all required PAMS sites

measure and report hourly speciated VOCs using an auto GC. More complete and consistent speciated VOC data nationally would better help meet certain objectives of the PAMS program described above (e.g., a speciated ambient air database useful in evaluating control strategies, analyzing emissions inventory issues, corroborating progress toward attainment, and evaluating population exposure to air toxics). Furthermore, as noted by the CASAC AMMS, hourly VOC data are "particularly useful in evaluating air quality models and performing diagnostic emission attribution studies. These data can be provided on a near real-time basis and presented along with other precursor species (e.g., oxides of nitrogen and carbon monoxide) collected over similar averaging times." Longer time-averaged data are of significantly lower value for model evaluation.[242] In addition, creating consistent monitoring requirements across the network will provide better data for analyzing regional trends and spatial patterns.

At the time the original PAMS requirements were promulgated, the canister options were included because the EPA recognized that the technologies necessary to measure hourly average speciated VOCs concentrations were relatively new and may not have been suitable for broad network use. At that time, gas chromatographs designed for laboratory use were equipped with auto-samplers designed to "trap" the VOC compounds from a gas sample, and then "purge" the compounds onto the GC column. The EPA did not believe that auto-GCs were universally appropriate due to the technical skill and effort necessary at that time to properly operate an auto-GC.

While the basic principles of auto-GC technology have not changed, the hardware and software of modern auto-GCs are greatly improved over that available at the time of the original

[242] Data of longer than a 1-hour average are often not used in model evaluations due to the complexity of trying to accommodate non-hourly averaged data.

PAMS requirements. Based on advice from the CASAC AMMS, the EPA has initiated an evaluation of current auto-GCs potentially suitable for use in the PAMS network. Based on the preliminary results, the EPA believes that typical NCore site operators, with appropriate training, will have the skill necessary to operate a modern auto-GC successfully. Considering the advances in auto-GC technology, the added value obtained from hourly data, and the proposed move of PAMS measurements to NCore sites in O_3 nonattainment areas, the EPA is proposing to require hourly speciated VOC sampling at all PAMS sites. The EPA notes that this proposed requirement would effectively prevent the use of canisters to collect speciated VOCs at the required PAMS sites. However, canister sampling may continue to be an appropriate method for collecting speciated VOCs at other locations as part of the proposed Enhanced Monitoring Plans.

While the EPA believes that the proposed transition to hourly speciated VOC sampling is the appropriate strategy to take advantage of improved technology and to broaden the utility of collected data, we are also mindful of the additional rigidity that the proposed mandatory use of auto-GCs may have for monitoring agencies, especially those that have experience with and have established effective and reliable canister sampling programs. Therefore, the EPA is requesting comment on the proposed requirement for hourly VOC sampling as well as the range of alternatives that might be appropriate in lieu of a strict requirement. Such alternatives could range from a more formal process where monitoring agencies could request a Regional Administrator-granted waiver from the hourly VOC requirements through the Annual Monitoring Network Plan process to collect canister-based speciated VOC data, to a more flexible set of alternatives where canister sampling could be retained based on each monitoring agency's evaluation of programmatic needs as well as their own logistical and technical capabilities.

3. Carbonyl Sampling

Carbonyls include a number of compounds important to O_3 formation that cannot currently be measured using the auto-GCs or canisters used at PAMS sites to measure speciated VOCs.[243] The current method for measuring carbonyls in the PAMS program is Compendium Method TO-11A (U.S. EPA, 1999). In this method, carbonyl compounds are adsorbed and converted into stable hydrazones using dinitrophenylhydrazine (DNPH) cartridges. These cartridges are then analyzed for the individual carbonyl compounds using liquid chromatography (LC) techniques. Three carbonyls (formaldehyde, acetaldehyde, and acetone) are currently required to be measured in the PAMS program.

In 2006, the EPA revised the PAMS requirements such that carbonyl sampling was only required in areas classified as serious or above nonattainment for O_3 under the 8-hour O_3 standard which effectively reduced the applicability of carbonyl sampling to a few areas in California. This change was made in recognition that there were a number of issues with Method TO-11A that raised concerns with the uncertainty in the carbonyl data being collected. These issues include interferences (humidity and O_3) and breakthrough (i.e., overloading of the DNPH cartridge) at high concentrations. While solutions for these issues have been investigated, these improvements have not been incorporated into Method TO-11A.

A recent evaluation of the importance of VOCs and carbonyls to O_3 formation determined that carbonyls, especially formaldehyde, are very important to O_3 formation (Cavender, 2013). CASAC AMMS (U.S. EPA, 2011c) also noted the importance of carbonyls

[243] Carbonyls compounds including formaldehyde and acetaldehyde are difficult to analyze by GC with Flame Ionization Detectors (FID). Both of these compounds in their free state, do not respond well to FID detectors. GC analysis is difficult due to the chemical composition of these compounds, increased polarity and their inherently low boiling points.

stating that "There are many compelling scientific reasons to measure carbonyls. They are a very important part of O_3 chemistry almost everywhere." Due to the importance of carbonyls to understanding O_3 chemistry, the EPA believes the need for carbonyl data outweighs the concerns over the uncertainty in the data. Therefore, the EPA is proposing to require all required PAMS sites to measure formaldehyde, acetaldehyde, and acetone. In addition, EPA is investigating alternatives to further reduce uncertainties in carbonyl data as described below.

To improve the carbonyl data that would be collected at required PAMS sites (and National Air Toxics Trends Station, or NATTS sites which are also currently measuring carbonyls), the EPA has undertaken an effort to improve carbonyl sampling and analysis methods to reduce the uncertainty in carbonyl data. This effort will lead to improvements to the current Method TO-11A by incorporating solutions to sampling and analysis issues that have been identified since Method TO-11A was finalized in 1999, such as the inclusion of an O_3 scrubber in the sampling system to reduce the interference from oxidants such as O_3. Also as part of this effort, the EPA is investigating alternative cartridge materials that have been identified in the literature as a replacement for DNPH that may have better collection efficiency with fewer interferences.

4. Nitrogen Oxides Sampling

It is well known that NO and NO_2 play important roles in O_3 formation (U.S. EPA, 2011a, Section 3.2.2). Under the current network design, Type 2 PAMS sites are required to measure NO_x (which by definition is the sum of NO and NO_2), and Types 1, 3, and 4 sites are required to measure NO_y which by definition includes NO, NO_2, and other oxidized nitrogen compounds (NO_z). NCore sites are also currently required to measure NO_y but are not required to measure NO_2.

In conventional NO_x analyzers, NO_2 is determined as the difference between the measured NO and NO_x concentrations. However, due to the non-selective reduction of oxidized nitrogen compounds by the molybedenum converter used in conventional NO_x monitors, the NO_2 measurement made by conventional NO_x monitors can be biased high due to the varying presence of NO_z compounds that may be reported as NO_2.[244] The unknown bias from the NO_z compounds is undesirable when attempting to understand O_3 chemistry.

Improvements in reactive nitrogen measurements have been made since the original PAMS requirements were promulgated that allow for improved NO_2 measurements. Selective photolytic converters have been developed that are not significantly biased by NO_z compounds (Ryerson et al., 2000). Monitors using photolytic converters are commercially available and have been approved as FEMs for the measurement of NO_2. In addition, methods that directly read NO_2 have been developed that allow for very accurate readings of NO_2 without some of the issues inherent to the "difference method" used in converter based NO_x analyzers. However, these direct reading NO_2 analyzers generally do not provide an NO estimate, and would need to be paired with a converter-based NO_x monitor or NO_y monitor in order to also measure NO.

As discussed above, the EPA is proposing to change the PAMS network design such that PAMS measurements would be required at existing NCore sites in O_3 nonattainment areas. NCore sites currently are required to measure NO and NO_y. NCore sites are not currently required to measure NO_2. Due to the importance of accurate NO_2 data to the understanding of O_3 formation, the EPA is proposing to require NO_2 measurements at required PAMS sites. Since

[244] Nitrogen compounds that would likely be reported (along with NO_2) as NO_2 with a conventional NOx monitor include peroxyacetyl nitrate (PAN), peroxypropionyl nitrate (PPN), peroxymethacryloyl nitrate (MPAN), and nitric acid (HNO_3), and as well as other nitrogen compounds not listed here.

existing NCore sites currently measure NO_y, either a direct reading NO_2 analyzer or a photolytic-converter NO_x analyzer should be used to meet the proposed requirement. The EPA believes conventional NO_x analyzers would not be appropriate for making PAMS measurements due to the uncertainty caused by interferences caused by NO_z compounds.

5. Meteorology Measurements

Monitoring agencies are currently required to collect surface meteorology at all PAMS sites. As noted in EPA's TAD (U.S. EPA, 1998) for the PAMS program, the PAMS requirements do not provide specific surface meteorological parameters to be monitored. As part of the implementation efforts for the original PAMS program, a list of recommended parameters was developed and incorporated into the TAD which includes wind direction, wind speed, temperature, humidity, atmospheric pressure, precipitation, solar radiation, and ultraviolet (UV) radiation. Currently, NCore sites are required to measure the above parameters with the exceptions of atmospheric pressure, precipitation, solar radiation, and UV radiation. In recognition of the importance of these additional measurements for O_3, the EPA is proposing to specify that required PAMS sites are required to collect wind direction, wind speed, temperature, humidity, atmospheric pressure, precipitation, solar radiation, and UV radiation. This proposed revision will provide clarity and consistency to the collection of surface meteorological parameters important to the understanding of O_3 formation. If PAMS measurements are moved to NCore sites in O_3 nonattainment areas, as is being proposed, the net impact of this proposed revision to the surface meteorological requirements for PAMS sites is to add the requirement for the monitoring of atmospheric pressure, precipitation, solar radiation, and UV radiation at affected NCore sites.

The existing PAMS requirements also require the collection of upper air meteorological measurements at one site in each PAMS area. The term "upper air meteorological" is not well defined in the existing PAMS requirements. As part of the implementation efforts for the original PAMS program "mixing height" was added to the PAMS TAD as a recommended meteorological parameter to be monitored.

Most monitoring agencies installed radar profilers to meet the requirement to collect upper air meteorology. Radar profilers provide data on wind and speed at multiple heights in the atmosphere. Radio acoustic sounding system (RASS) profilers are often included with radar profilers to obtain atmospheric temperature at multiple heights in the atmosphere and to estimate mixing height. The EPA recognizes that the upper air data on wind speed and wind direction from radar profilers can be very useful in O_3 modeling. However, many of the current PAMS radar profilers are old and in need of replacement or expensive maintenance. In addition, the cost to install and operate radar profilers at all NCore sites would be prohibitive. Therefore, the EPA is not proposing to require upper air wind speed and direction as required meteorological parameters to be monitored at PAMS sites. Where monitoring agencies find the radar profiler data valuable, continued operation of existing radar profilers or the installation of new radar profilers would be appropriate to consider as part of the state's Enhanced Monitoring Plan.

As discussed above, mixing height is one upper air meteorological measurement that has historically been measured at PAMS sites. A number of methods can be used to measure mixing height in addition to radar profiler technology discussed above. Recent developments in ceilometer technology allow for the measurement of mixing height by changes in particulate concentrations at the top of the boundary layer (Eresmaa et al., 2006). Ceilometers provide the potential for continuous mixing height data at a fraction of the cost of radar profilers. Due to the

importance of mixing height measurements for O_3 modeling, the EPA is proposing to require monitoring agencies to measure mixing height at PAMS sites. The EPA is aware of a large network of ceilometers operated by the National Oceanic and Atmospheric Administration (NOAA) as part of the Automated Surface Observing System (ASOS). The EPA has been in discussions with NOAA regarding the potential for these systems to provide the needed mixing height data, however, the ASOS ceilometers are not currently equipped to provide mixing height data. Nonetheless, the EPA will continue to work with NOAA to determine if the ASOS ceilometers can be upgraded to meet the need for mixing height data, and is including proposed regulatory language that will allow states a waiver to use nearby mixing height data from ASOS or other sources to meet the requirement to collect mixing height data at required PAMS sites.

6. PAMS Season

Currently, PAMS measurements are required to be taken during the months of June, July, and August. This 3-month period is referred to as the "PAMS Season". As part of the PAMS re-evaluation, the EPA considered changes to the PAMS season. The 3-month PAMS season was originally selected to represent the most active period for O_3 formation. However, the EPA notes that in many areas the highest O_3 concentrations are observed outside of the PAMS season.[245] As an example, the highest O_3 concentrations in the Mountain-West often occur during the winter months. Data collected during the current PAMS season would have limited value in understanding winter O_3 episodes.

[245] The current O_3 monitoring season by state in 40 CFR part 58, appendix D, requires monitoring seasons from 4 to 12 months. As noted in section VI.B. of this preamble, the EPA proposes to lengthen the seasons further for 33 states.

The CASAC AMMS (U.S. EPA, 2011c) noted in their report to the EPA that "it would be desirable to extend the PAMS monitoring season beyond the current June, July, August sampling period," but that "the monitoring season should not be mandated and rigid; it should be flexible and adopted and coordinated on a regional airshed basis (i.e., within the same O_3 region)." The EPA agrees with CASAC on the need for flexibility in determining when PAMS measurements should be taken to meet local monitoring needs but also agrees with CASAC that the flexibility "should not conflict with national goals for the PAMS program." A significant benefit of the standard PAMS season is that it ensures data availability from all PAMS sites for national- or regional-scale modeling efforts.

While the EPA agrees with the potential benefit of extending the availability of PAMS measurements outside of the current season, we also considered the burden of requiring monitoring agencies to operate additional PAMS measurements (e.g., hourly speciated VOC) for periods that in some cases, might be much longer than the current 3-month season, for example, if the PAMS season was extended to match each state's required O_3 monitoring season. Being mindful of the potential burden associated with a lengthening of the PAMS season as well as the potential benefits of the additional data, the EPA is proposing to maintain the current 3-month PAMS monitoring season for required PAMS sites rather than extending the PAMS season to other periods where elevated O_3 may be expected. The EPA believes that the 3-month PAMS season will provide a consistent data set of O_3 and O_3 precursor measurements for addressing the national PAMS objectives. Monitoring agencies are encouraged to consider collecting PAMS measurements in additional periods beyond the required PAMS season as part of the proposed Enhanced Monitoring Plan. The monitoring agencies should consider factors such as the periods

of expected O_3 exceedances and regional consistency when determining potential expansion of the specific monitoring periods beyond the required PAMS season.

7. Timing and Other Implementation Issues

The EPA recognizes that the proposed changes to the PAMS requirements will require resources and a reasonable implementation schedule if they are promulgated. The proposed network design changes would require monitoring agencies to start collection of PAMS measurements at many NCore sites that are not currently collecting PAMS measurements. These affected monitoring agencies would need to make capital investments (primarily for the installation of auto-GCs, NO_2 monitors, and ceilometers). Monitoring agencies will also need time to develop the expertise, by training existing staff or otherwise, to successfully collect PAMS measurements. The EPA believes that the current national funding level of the PAMS program is sufficient to support these proposed changes, especially in light of the staggered deployment schedule described below. The current grant guidance includes the maintenance of a PAMS capital equipment reserve that could be used to assist monitoring agencies with the purchase of needed equipment. We also recognize that the proposed revisions would result in a potential shifting of PAMS resources, and we would work with the regional offices, affected states, and monitoring organizations such as the NACAA and the Association of Air Pollution Control Agencies (AAPCA) to facilitate any shifts in funding during the implementation phase of the program.

For these reasons, the EPA is proposing a staggered deployment schedule for the proposed changes to the PAMS requirements (including both the monitoring at required PAMS sites and the Enhanced Monitoring Plans). For areas currently designated as nonattainment for O_3 based on the 2008 NAAQS, the EPA is proposing to require monitoring agencies to

incorporate the proposed PAMS requirements into their next annual monitoring network plan following promulgation of these proposed changes (due July 1, 2016, based on current schedules) and to comply with these proposed PAMS requirements by the following PAMS season (June 1, 2017, based on current schedules). For new areas designated as O_3 nonattainment based on the initial round of designations following the promulgation of a revised O_3 standard, the EPA is proposing to require monitoring agencies to incorporate the proposed PAMS requirements into their next annual monitoring network plan following designations (due July 1, 2018, based on current schedules) and to comply with new PAMS requirements by the following PAMS season (June 1, 2019, based on current schedules). Finally, the EPA is proposing that areas designated as O_3 nonattainment following the initial round of designations be allowed 2 years after designation to comply with the proposed PAMS requirements. The EPA believes that the proposed compliance schedule will allow monitoring agencies adequate time to implement the proposed PAMS requirements. The EPA solicits comments on whether the proposed implementation schedule is practicable, or whether additional time would be warranted for installation of new PAMS sites, the development of Enhanced Monitoring Plans, or other specific new PAMS requirements.

D. Addition of a New Federal Reference Method (FRM) for O_3

To be used in a determination of compliance with the O_3 NAAQS, O_3 monitoring data must be obtained using either a FRM or a FEM, as defined in 40 CFR parts 50 and 53. Nearly all the monitoring methods for O_3 currently used by state and local monitoring agencies are FEM continuous analyzers utilizing a measurement principle based on quantitative measurement of the absorption of UV light by O_3. This type of O_3 analyzer was introduced into the monitoring networks in the 1980s and has since become the most predominant type of method used because

of its all-optoelectronic design and ease of installation and use. The existing O_3 FRM utilizes a measurement principle based on quantitative measurement of the chemiluminescence from the reaction of O_3 with ethylene. Ozone analyzers based on this FRM principle are no longer used for routine O_3 field monitoring and are no longer commercially available. The current list of all approved FRMs and FEMs capable of providing ambient O_3 data for use in NAAQS attainment decisions may be found on the EPA's website and in the docket for this action (U.S. EPA, 2014g).

The EPA proposes to revise the FRM to establish a new technique for measuring O_3 in the ambient air. This new technique would be a new type of analyzer based on Nitric Oxide-chemiluminescence (NO-CL) methodology. Because of the similarity of this new chemiluminescence technique to the existing ethylene-chemiluminescence (ET-CL) methodology, the EPA proposes that it be incorporated into the existing O_3 FRM, using the same calibration procedure. Appendix D of 40 CFR part 50 would be revised to include both the original ET-CL as well as the new NO-CL methodology. A minor change is proposed to the existing O_3 FRM calibration procedure, which would be applicable to both chemiluminescence FRM methodologies. The proposed change in section 4.5.2.3 of the calibration procedure in Part 50 provides for more flexibility in the range of the linearity test.

FRMs, as set forth in several appendices to 40 CFR part 50, serve two primary purposes. The first is to provide a specified, definitive methodology for routinely measuring concentrations of various ambient air pollutants for comparison to the NAAQS in Part 50, for quality assurance assessment of monitoring data, and for other air monitoring objectives. The second is to provide a standard of comparison for determining equivalence to the specified reference method of

alternative and perhaps more practical pollutant measurement methods (equivalent methods, or FEMs) that can be used in lieu of the FRM for routine monitoring.

Some of the FRMs contained in appendices to Part 50 (such as the original SO_2 FRM and the lead FRM) are manual methods that are completely specified in a step-by-step manner. Others (such as the O_3 FRM) are in the form of a measurement principle along with an associated calibration procedure that must be implemented in a commercially-produced FRM analyzer model. Such FRM-type analyzers must be tested and shown to meet explicit performance and other qualification requirements that are set forth in 40 CFR part 53 (Ambient Air Monitoring Reference and Equivalent Methods). Each analyzer model is then considered to be an FRM only upon specific designation as an FRM by the EPA under the provisions of 40 CFR 53.2 (General requirements for a reference method determination).

As pollutant measurement technology advances and changes, the reference methods in part 50 are assessed by the EPA to determine if improved or more suitable measurement technology is available to better meet current FRM needs as well as potential future FRM requirements. New technology can either be presented to the EPA for evaluation by an FEM applicant under 40 CFR 53.16 (Supersession of reference methods), or (as in this case) the EPA can originate the process as provided in 40 CFR 53.7 (Testing of methods at the initiative of the Administrator).

The current FRM for measuring O_3 in the ambient air was promulgated on April 30, 1971 (36 FR 8186), in conjunction with the EPA's establishment (originally as 42 CFR part 410) of the first national ambient air quality standards for six criteria pollutants (including O_3), as now set forth in 40 CFR part 50. On February 8, 1979 (44 FR 8224), the original O_3 FRM calibration procedure was changed from a wet-chemical standard to a UV photometric calibration

procedure. Minor updates to technical references were made on July 18, 1997 (62 FR 38895). This FRM is specified as a measurement principle and calibration procedure in Appendix D of Part 50. The measurement principle of the FRM is based on the quantitative measurement of chemiluminescent light intensity emitted by the chemical reaction of O_3 in an air sample with ethylene gas mixed in a measurement cell. This ET-CL measurement is calibrated by the specified calibration procedure, which is based on photometric assay of O_3 calibration concentrations in a dynamic flowing system, using measurement of the absorption of UV light by the O_3 calibration concentrations at a nominal wavelength of 254 nm.

At the time of the FRM's original promulgation, analyzers based on the ET-CL FRM were widely used for field monitoring of O_3. Laboratory testing prior to, during, and following analyzer development indicated that interferences to which the method was susceptible were few and relatively minor in magnitude. Further, subsequent field experience with the FRM analyzers showed them to be stable, accurate, and reliable. Operation of these FRM analyzers requires a supply of ethylene gas, provided by an attendant high-pressure compressed gas cylinder. Installation of this high-pressure cylinder of flammable and potentially explosive gas proved problematic at many field-monitoring sites due to fire codes or other safety restrictions. Further, the ethylene gas cylinder required periodic replacement – a considerable cost and operational inconvenience.

Following the development of FEM O_3 analyzers based on UV absorption, use of these newer UV FEM analyzers eventually supplanted the ET-CL FRM analyzers because the UV analyzers required no gas supply or other reagents and were much easier to install and operate. Currently, nearly all compliance monitoring in the U.S. is carried out with UV absorption type FEM analyzers (Long, 2014). This transition from ET-CL FRM analyzers to UV absorption

analyzers in U.S. (as well as world-wide) monitoring networks has become so extensive that analyzer manufacturers no longer manufacture the ET-CL FRM analyzers. The last new O_3 FRM analyzer was designated by EPA in 1979. As a result, no FRM O_3 analyzers are commercially available to serve as reference standards for testing and designation of new O_3 FEM analyzers, for O_3 compliance monitoring, and for quality assurance of field monitors. FRM units manufactured years ago are becoming increasingly difficult to maintain in operational condition due to aging of components and lack of replacement parts (several of the original FRM analyzer manufacturers no longer exist).

Until the last few years, relatively few measurement techniques have been successfully implemented in a continuous ambient O_3 analyzer model that has achieved designation by the EPA as either an FRM or FEM (U.S. EPA, 2014g). These include the ET-CL technique, the UV absorption technique and differential optical absorption spectroscopy (DOAS, an open-path method represented by two FEM instrument models from different manufacturers). A relatively new technology is nitric oxide (NO)-O_3 chemiluminescence, which is represented by two FEM instrument models from a single manufacturer. An even newer technology is a "scrubberless" UV absorption technique that is represented by a single analyzer model for which FEM designation was recently achieved.

As noted above, the ET-CL technique is technically advantageous as an FRM, but its ethylene supply requirement and the lack of commercially available analyzers severely limit its ability to fulfill the needs for an O_3 FRM. DOAS analyzers are not suitable for some FRM purposes because of their open-path nature.

Commercial availability of conventional UV-absorption O_3 analyzers is excellent, and their widespread use makes the measurement technique desirable for consideration as an FRM.

However, the technique is susceptible to potential measurement interference from mercury, some volatile aromatic hydrocarbons, water, and other compounds that sometimes occur in ambient air (Spicer et al., 2010). These interferences are substantially reduced by the use of scrubbers (as discussed below) in UV FEM analyzers, such that the technique can be used extensively for compliance monitoring. Although the interferences are substantially reduced by the use of scrubbers, the potential for interferences prevents the technique from consideration as an FRM.

It is important to make a distinction between use of the UV-absorption measurement technique for assay of O_3 concentrations, as described in the FRM calibration procedure of Part 50, Appendix D, and use of the UV absorption technique for measurement of O_3 in ambient air. For assay of calibration concentrations, the technique is used in a system with clean, zero air (air that must be free of contaminants which would cause a detectable response from the O_3 analyzer) such that potential ambient-air-borne interferences are not an issue. Under these clean-air conditions, the UV assay technique is very accurate and highly reproducible, so much so that the National Institute of Standards and Technology (NIST) utilizes it for its O_3 Standard Reference Photometer.

In contrast, use of the UV-absorption technique to measure O_3 in ambient air is much more difficult because of the need to deal with UV-absorbing (and hence potential interfering) species present in ambient air. Ambient UV O_3 monitors typically suppress interferences by using an "O_3 scrubber" that attempts to remove O_3 from ambient air without removing potentially interfering species, to create a zero- O_3 reference air that still contains any potentially interfering species. In a differential measurement process that compares the UV absorption measurement of O_3 in the ambient air sample with that in this zero-O_3 reference air, the net effect of interferences is minimized by cancellation. FEM analyzers using such O_3 scrubbers are able to

meet the FEM interference test requirements of 40 CFR part 53 and provide adequate O_3 monitoring data at most typical O_3 monitoring sites.

On October 7, 2011, the EPA designated two NO-CL O_3 analyzers as FEMs (76 FR 62402). These analyzers use a variation of the current FRM measurement principle, based on measurement of the chemiluminescence produced by the chemical reaction of O_3 with NO rather than with ethylene. As explained below, the EPA believes that this variation has performance suitable for an O_3 FRM and offers a substantial implementation advantage over the existing FRM.

The NO-CL measurement technique for O_3 is quite similar to the existing ET-CL FRM technique, in that both are based on the measurement of the intensity of the chemiluminescence resulting from a chemical reaction of a reactant with the O_3 in the ambient air sample. The principle difference is that the reactant is NO rather than ethylene. As a potential variation of the FRM measurement principle, the measurement would be calibrated with the same calibration procedure specified in the FRM.

The performance of NO-CL analyzers has been shown to be very similar to the performance of ET-CL FRM analyzers, providing stable, accurate, highly reproducible measurements of ambient O_3 with minimal potential interferences (U.S. EPA, 2014h). As with ET-CL, some minor interference from variable humidity in ambient air can be minimized with a sample air dryer. The analyzers require a supply of NO gas, typically from a high-pressure compressed gas cylinder. However, unlike ethylene, NO is neither flammable nor explosive, so use of the method in field applications is eased considerably relative to use of ET-CL analyzers. Nitric oxide gas is toxic, but it is possible to use a cylinder of much less toxic, non-combustible nitrous oxide (N_2O) gas with a photolytic N_2O-to-NO converter to supply NO gas for the

instrument as needed. There will be no requirement for states to switch to NO-CL analyzers; therefore, UV-absorption FEM analyzers can still be used for routine O_3 monitoring. As noted previously, the EPA has designated two NO-CL FEM analyzers (from the same manufacturer), both of which would qualify for re-designation as FRMs if the NO-CL technique is finalized as an FRM. NO-CL analyzers would then be available for those applications where an FRM analyzer is needed.

Because of the similarity of the NO-CL technique to the existing ET-CL technique, the EPA is proposing to amend the ET-CL FRM by adding the NO-CL technique as a variation to the existing FRM measurement principle specified in Appendix D of Part 50. The specified calibration procedure would be applicable to both FRM ET-CL and NO-CL measurement techniques. Since the existing ET-CL FRM measurement principle remains a technically adequate FRM, and the proposed new NO-CL FRM is technically adequate, it is prudent to retain the existing FRM measurement principle. The designation of all currently designated O_3 FEMs is based on comparison to the ET-CL FRM, so retention of the ET-CL FRM allows those FEM designations to be retained.

Adding the proposed NO-CL measurement technique to the current O_3 FRM would allow at least two commercially available FRM analyzer models (currently FEMs) to be re-designated as FRMs to fulfill FRM analyzer needs. Some older FRM analyzers based on the existing ET-CL measurement principle may still be in operable condition, and there is no technical reason to cancel their designation by withdrawing the original ET-CL FRM technique. Additionally, retaining the existing ET-CL FRM technique allows for the possibility of an instrument manufacturer offering an ET-CL FRM analyzer in the future.

The second of the newly introduced O_3 measurement techniques is known as the scrubberless UV absorption (UV-SL) technique. It utilizes the UV-absorption measurement technique that is widely used in O_3 monitoring networks. The new UV-SL technique specifies removal of O_3 from the sample air for the zero reference by a gas-phase reaction with NO rather than via a conventional chemical scrubber. The NO reacts with the O_3 much faster than with other potential interfering compounds and is very effective at removing the O_3 without affecting other compounds that may be present in the ambient air sample. The differential UV measurement can effectively eliminate interferences to an insignificant level. Other potential interference arising from changes in water vapor concentration can be minimized with a sample air dryer.

The UV-SL technique appears to have characteristics that are advantageous for meeting the requirements of a new O_3 FRM. Analyzers implementing this technique require a supply of NO (such as a high-pressure gas cylinder). As noted previously in connection with the NO-CL technique, NO is neither flammable nor explosive, so use of the method in field applications is eased considerably relative to use of ET-CL analyzers. Use of N_2O gas, also supplied in compressed gas cylinders but less toxic than NO, is also possible with a photolytic N_2O to NO converter. One commercially available UV-SL analyzer was approved as an FEM on June 18, 2014 (79 FR 34734). The performance of the analyzer, as reported by the manufacturer[246] and some initial field and laboratory studies performed by the EPA (U.S. EPA, 2014h), suggests that the analyzer may meet existing, as well as the proposed, requirements for an O_3 FRM.

The CASAC AMMS provided a peer review of the proposed FRM and changes to the Part 53 requirements on April 3, 2014. The CASAC AMMS recommended that the EPA

[246] 2B FEM test data via http://www.twobtech.com/model_211.htm

consider the UV-SL as a FRM. The EPA is independently conducting further laboratory and field tests of the UV-SL analyzer to verify its performance. Although this new UV-SL methodology shows substantial promise for future consideration as a new O_3 FRM, there is currently insufficient documented test and performance information available on the method to propose it as a new FRM at this time. The EPA is continuing to study the method and assess its potential suitability as a new O_3 FRM, and the EPA solicits comment on its potential and suitability as an FRM.

The EPA is not proposing to supersede (replace) the existing O_3 FRM measurement principle under the provisions of 40 CFR 53.16. Rather, for the reasons in the preamble and having conducted the necessary tests, the EPA is proposing, consistent with 40 CFR 53.7 , to revise the existing O_3 FRM to widen the scope of its ET-CL measurement principle to include the NO-CL measurement technique as well.

Following promulgation of the proposed revised O_3 FRM measurement principle, any new candidate O_3 FRM analyzers would be required to use either the ET-CL or NO-CL measurement principle, and would also be subject to the O_3 FRM performance requirements proposed in 40 CFR part 53. The FRM calibration procedure specified in Appendix D would apply to both O_3 FRM measurement techniques.

A substantial number of laboratory tests have confirmed the excellent performance of the NO-CL analyzers as well as very close agreement with both ET-CL and UV analyzers in collocated field tests. Therefore, the EPA believes the proposed FRM measurement principle that incorporates the NO-CL methodology is the best approach to improve the availability of FRM analyzers for O_3. No other currently known approach or alternative methodology appears to be more appropriate for a new FRM. Adding the NO-CL technology to the existing O_3 FRM is also

endorsed by the EPA's CASAC AMMS. The EPA solicits comment on the proposal to retain the existing O_3 FRM measurement principle and amend it to include the NO-CL variation as well. Comments are also solicited on the nature and adequacy of the proposed revised FRM.

The generic description of the FRM measurement principle for the existing ET-CL FRM in Appendix D would be amended to include the NO-CL variation (see the proposed rule text for Appendix D). As noted previously, the new NO-CL technique would also use the same calibration procedure in Appendix D and would be similarly coupled with the explicit O_3 FRM analyzer performance requirements specified in subpart B of 40 CFR part 53. In addition to the incorporation of the NO-CL methodology, numerous minor clarifications, wording changes, additional details, and a more refined numbering system are being proposed for Appendix D. Accordingly, the entire Appendix D is proposed to be revised as identified in the proposed regulatory text.

Because the new NO-CL technique is proposed to be added to the existing FRM measurement principle, while the existing ET-CL FRM principle would be retained and remain in effect, all existing designated FEM analyzer models will continue their designated status. Thus, this action would cause no negative consequences on monitoring agencies, and no disruption of, or required change to, their O_3 monitoring programs. Comparative testing has been carried out at several field monitoring sites under a variety of ambient conditions, and the results confirm that the proposed new NO-CL FRM measurement technique provides ambient O_3 measurements that compare and correlate excellently with measurements using the existing ET-CL measurement principle, with no significant bias, offset, or discrepancy (U.S. EPA, 2014h).

E. Revisions to the Procedures for Testing Performance Characteristics and Determining Comparability Between Candidate Methods and Reference Methods

The only substantial changes proposed to the requirements of Part 53 are in Tables B-1 and B-3 of Subpart B. Table B-1 has been updated in recent years with regard to FRM and FEM methods for SO_2 (74 FR 64877, December 8, 2009) and CO (76 FR 54294, August 31, 2011). Similar update changes to Table B-1 are proposed here for O_3. Modest changes proposed for Table B-3 would add new interferent test concentrations specifically for NO-CL analyzers, adding a test for NO_2. The table would also clarify that the existing test concentrations apply to ET-CL O_3 analyzers. Figure B-5 is revised to correct a minor inconsistency in the "Calculations" column for the two "Precision" rows to change "% URL" to "% Standard Deviation."

Several changes to the performance requirements given in Table B-1 are proposed for O_3. The performance requirements for "standard range" instruments would be updated to be more consistent with current O_3 analyzer performance capabilities. The noise requirement limit would be reduced from 0.005 to 0.001 ppm for O_3 analyzers, the lower detectable limit would be reduced from 0.010 to 0.003 ppm, and the maximum interference equivalent limits would be reduced from 0.02 to 0.005 ppm for each potential interfering agent (interferent). The performance limit requirement for the total of all interferents is proposed to be withdrawn for O_3 methods. This withdrawal is appropriate because O_3 analyzer test performance, as reported in recent FEM applications, has shown that the limits established for individual interferents are sufficiently effective to define adequate analyzer performance, and the separate limit for the total of all interferences is unnecessary.

Maximum zero drift for O_3 analyzers would be reduced from 0.02 to 0.004 ppm. The existing limit for span drift at 20% of the upper range limit (URL) is proposed to be withdrawn. Analyzer performance test results have clearly shown that the existing 80% URL limits are fully adequate and better specify span drift performance and that the 20% URL span drift limits are

ineffective and unnecessary. The span drift limit applicable to O_3 analyzers is proposed to be reduced from ±5.0% to ±3.0%. Lag time limits would be reduced from 20 to 2 minutes, and rise and fall time limits would be similarly reduced from 15 to 2 minutes.

For precision, the EPA proposes to change the form of the precision limit specifications (at both 20% and 80% of URL) for O_3 analyzers from ppm to percent (of the URL). This change would make the limits responsive to higher and lower measurement ranges, as appropriate, and is consistent with the same change previously made in the corresponding precision requirements for SO_2 and CO analyzers. Both limits would be set at 2% for O_3 analyzers, which is equivalent to, and, therefore effectively unchanged, from the existing limits of 0.01 ppm (for a URL of 0.5 ppm). Although the changes to Part 53 proposed here are generally restricted to methods for O_3, this change in form for the precision limits is proposed to be extended to methods for NO_2 as well, to simplify Table B-1 and make it consistent for all pollutants covered by the Table. The precision limits that would be applicable to methods for NO_2 are proposed to be changed to 4% and 6% of the URL (for 20% and 80% of the URL, respectively). These values are exactly equivalent to the existing limits of 0.020 ppm and 0.030 ppm, respectively, for the specified URL of 0.5 ppm. Therefore, these precision limits for NO_2 remain effectively unchanged, but specified as a percent rather than an absolute concentration. A new footnote is proposed for Table B-1 to clarify that these revised precision limits are given as "standard deviation expressed as percent of the URL." Therefore, Figure B-5 will be revised to correct a minor inconsistency in the "Calculation" column for the two "Precision" rows to change the "% URL" to "% Standard Deviation."

The EPA has reviewed the documented performance of currently designated FRM and FEM methods for O_3 (that are still in commercial production or in service in monitoring

networks) and has verified that all would meet the proposed new performance requirements for O_3 methods (Long, 2014). Therefore, adoption of the proposed new performance requirements in Table B-1 would not require the withdrawal or cancelation of the FRM or FEM designation of any such O_3 analyzers.

Finally, to meet a need for analyzers with more sensitive measurement ranges for monitoring in relatively clean areas, new, “lower range” performance limit requirements are proposed for O_3 analyzers. These lower range limits are set forth in a new “lower range” column in Table B-1 and would be optional. But where a lower measurement range is included in the FRM or FEM designation, these proposed new requirements would provide more stringent performance for analyzers commensurate with greater accuracy for low-level measurements in lower-level concentration ranges.

The EPA believes that these proposed changes in the performance requirements of Tables B-1 and B-3 are appropriate, based on analyzer performance data available from analyzer manuals and recent FRM and FEM applications. The EPA solicits comment as to whether the proposed changes are reasonable, appropriate, beneficial, and achievable without undue burden.

The EPA is proposing minor changes to the general provisions in subpart A of Part 53 to ease the administrative burden associated with processing and reviewing modification requests to existing FRMs and FEMs. This change in 40 CFR 53.14(c) will extend the length of time for the Administrator to take action on a request for modification of a reference or equivalent method from 30 days to 90 days. Section 53.14(c) would read: "Within 90 calendar days after receiving a report under paragraph (a) of this section, the Administrator will take one or more of the following actions:" The EPA is also proposing to remove the obsolete provision that manufacturers who offered $PM_{2.5}$ or $PM_{10-2.5}$ samplers or analyzers for sale as part of a FRM or

FEM may continue to do so only so long as updates of the Product Manufacturing Checklist are submitted annually. This change is accomplished through the removal of section (i) from 40 CFR 53.9 and Figure E-2 from subpart E of Part 53.

VII. Implementation of Proposed O_3 Standards

The proposed revisions to the primary and secondary O_3 NAAQS discussed in sections II.E and IV.G of this preamble, if finalized, would trigger a process under which states[247] make recommendations to the Administrator regarding area designations, and the EPA promulgates the final area designations. States would also be required to review, modify, and supplement their existing SIPs. The proposed O_3 NAAQS revisions would also affect the transportation conformity and general conformity processes. The revised O_3 NAAQS and the subsequent designations process could affect which preconstruction permitting requirements apply to O_3 in some areas and the nature of those requirements in others.

The EPA has regulations in place addressing the requirements for SIPs and several provisions in these existing rules cover O_3 (40 CFR part 51). States likewise have provisions in their SIPs to address air quality for O_3 and to implement the existing O_3 NAAQS. The EPA has also provided general guidance on the development of SIPs for all pollutants and administration of construction permitting programs, as well as specific guidance on implementing the O_3 NAAQS in some contexts under the CAA and the EPA regulations.

When the EPA proposes to revise a NAAQS for a particular criteria pollutant, it considers the extent to which existing EPA regulations and guidance are sufficient to implement the standard and whether any revisions or updates to those regulation and guidance would be

[247] This and all subsequent references to "state" are meant to include state, local, and tribal agencies responsible for the implementation of an O_3 control program.

helpful or appropriate in facilitating the implementation of the revised standard by states. The CAA does not require that the EPA promulgate new implementing regulations every time that a NAAQS is revised. Likewise, the CAA does not require the issuance of additional implementing regulations or guidance by the EPA before a revised NAAQS becomes effective. Existing EPA regulations may be sufficient in many cases to enable the EPA and the states to begin the process of implementing a revised NAAQS. However, where the nature of revisions to a NAAQS indicate that additional EPA regulations or guidance (or revisions to existing regulations or guidance) may be helpful to implement unique aspects of the revised standard, the EPA endeavors to provide those regulations and guidance in a timely way to facilitate preparation of SIPs plans. It is important to note, however, that the existing EPA regulations in 40 CFR part 51 applicable to SIPs generally and to particular pollutants continue to apply even without such updates. Accordingly, the discussion below provides the EPA's current thoughts about the extent to which revisions to existing regulations and additional guidance might be helpful or appropriate to aid in the implementation of a revised O_3 NAAQS, should one be finalized through this rulemaking.

This section provides background information for understanding the possible implications of the proposed NAAQS changes in some areas, and describes the EPA's plans for providing revised rules or additional guidance on some subjects in a timely manner to assist states with their implementation efforts under the requirements of the CAA. This section also describes existing EPA interpretations of CAA requirements and other EPA guidance relevant to implementation of revised O_3 NAAQS. Relevant CAA provisions that provide potential flexibility with regard to meeting implementation timelines are also discussed.

This section contains a discussion of how existing requirements to reduce the impact on O_3 concentrations from the stationary source construction in permit programs under the CAA may be affected by the proposed revisions of the O_3 NAAQS. These are the PSD and Nonattainment New Source Review (NNSR) programs. To facilitate the timely implementation of the PSD requirements, the EPA proposes as part of this rulemaking to add a grandfathering provision to its regulations that would apply to certain PSD permit applications that are pending on the effective date of the revised O_3 NAAQS. If the proposed NAAQS revisions are finalized, this grandfathering provision could be finalized at the same time as the revised NAAQS (see section VII.D of this preamble).

The EPA intends to propose additional regulations and issue additional guidance, as necessary, related to the implementation requirements for any revised O_3 NAAQS resulting from this proposal. The EPA intends to take these actions on a schedule that provides timely assistance to air agencies. Accordingly, in this section, the EPA solicits comment on several issues that the agency anticipates addressing in future guidance or regulatory actions to assist with implementation of the revised O_3 NAAQS. Because these issues are not relevant to the establishment of the NAAQS, and the CAA does not require that the EPA provide implementation rules or guidance for each revised NAAQS, the EPA does not expect to respond, nor is the agency required to respond, to these comments in the final action on this proposal. However the EPA expects these comments will be helpful as future guidance and regulations are developed.

A. NAAQS Implementation Plans

1. Background

As directed by theCAA, reducing pollution to meet national air quality standards always has been a shared task, one involving the federal government, states, tribes and local air quality management agencies. The EPA develops regulations and strategies to reduce pollution on a broad scale, while states and tribes are responsible for implementation planning and any additional emission reduction measures necessary to bring areas into attainment. The agency supports implementation planning with technical resources and guidance, while states and local agencies use their knowledge of local needs and opportunities in designing emission reduction strategies that will work best for their industries and communities.

This partnership has proved effective since the EPA first issued O_3 standards more than three decades ago. For example, 101 areas were designated as nonattainment for the 1-hour O_3 standards issued in 1979. As of the end of 2013, air quality in 98 of those areas meets the 1-hour standards. The EPA strengthened the O_3 standards in 1997, shifting to an 8-hour standard to improve public health protection, particularly for children, the elderly, and other sensitive individuals, against effects such as reduced lung function and respiratory symptoms, hospital and emergency room visits for asthma, and possible irreversible damage to the lungs. The 1997 standards drew significant public attention when they were proposed, with numerous parties voicing concerns about states' ability to comply. However, after close collaboration between the EPA, states, tribes and local governments to reduce O_3-forming pollutants, significant progress has been made. Air quality in 90% of the original 113 areas designated as nonattainment for the 1997 O_3 NAAQS now meets the 1997 standards. The EPA designated 46 areas as nonattainment for the 2008 O_3 NAAQS in 2012. We expect these areas to make similar progress in achieving clean air.

The majority of man-made NO_X and VOC emissions that contribute to O_3 formation in the U.S. come from the following sectors: on-road and nonroad mobile sources, industrial processes (including solvents), consumer and commercial products, and the electric power industry. In 2011, the most recent year for which the National Emissions Inventory (NEI) is available, onroad and nonroad mobile sources accounted for about 60% of annual NO_X emissions; and the electric power industry accounted for about nearly 15%. With respect to VOC, industrial processes (including solvents) accounted for about 57% of manmade VOC emissions; and mobile sources accounted for about 39%. Emissions from natural sources, such as trees, also comprise around 70% of total VOC emissions nationally, with a higher proportion during the O_3 season and in areas with more vegetative cover. *See* section VII.F of this preamble for more detail on background O_3.

Since 2000, the EPA has issued numerous emissions and fuels standards for on-road and nonroad mobile sources, as well as emissions standards for many types of stationary sources. Benefits from new engine standards increase each year as older, more-polluting vehicles and engines are replaced with newer, cleaner models. Benefits from fuel programs generally begin as soon as a new fuel is available. The ongoing emission reductions from federal programs such as these will provide for substantial emissions reductions well into the future, and will complement state and local efforts to attain any revised O_3 NAAQS.

Over the past 15 years, the EPA has established new emissions standards under title II of the CAA, 42 U.S.C. 7521–7574, for numerous classes of automobile, truck, bus, motorcycle, earth mover, aircraft, and locomotive engines, and for the fuels used to power these engines. The EPA also established new standards for the smaller engines used in small watercraft, and lawn and garden equipment. In March 2008, the EPA promulgated new standards for locomotive and

for marine diesel engines and in April 2010 the EPA promulgated new standards for Category 3 (C3) engines installed on U.S. ocean-going vessels and to marine diesel fuels produced and distributed in the U.S. In September 2011, the EPA and the National Highway Transportation Safety Administration established greenhouse gas and fuel efficiency standards for new 2014 – 2018 model year medium and heavy-duty engines and vehicles. In addition to improving fuel efficiency and reducing greenhouse gas emissions this rule reduces emissions of NO_X from the subject vehicles. In March 2014, the EPA promulgated Tier 3 standards for tailpipe and evaporative emissions from passenger cars, light-duty trucks, medium-duty passenger vehicles, and some heavy-duty vehicles. The associated gasoline sulfur standard will enable more stringent vehicle emissions standards and will make existing emissions control systems more effective. Compared to current standards, the VOC and NO_X tailpipe standards for light-duty vehicles represent approximately an 80% reduction from today's fleet average, and the heavy-duty tailpipe standards represent about a 60% reduction in VOC and NO_X.

The emission reductions from all of these mobile source programs are significant and will continue to be realized throughout the implementation period for any revised O_3 NAAQS. The EPA projects that between 2011 and 2025, onroad and nonroad mobile NO_X will decline by more than 60% and onroad and nonroad mobile VOC will decline by more than 50%.[248]

The reduction of VOC emissions from industrial processes has been achieved either directly or indirectly through implementation of control technology standards, including maximum achievable control technology (MACT), reasonably available control technology (RACT), and best available control technology (BACT) standards; or is anticipated due to

[248] "Regulatory Impact Analysis for the Proposed Revisions to the National Ambient Air Quality Standards for Ground-Level Ozone," (December 2014) at *http://www.epa.gov/ttnecas1/ria.html*.

proposed or upcoming proposals based on generally available control technology or best available controls under provisions related to consumer and commercial products. These standards have resulted in VOC emission reductions of almost a million tons per year accumulated starting in 1997 from a variety of sources including combustion sources, coating categories, and chemical manufacturing. The EPA also finalized emission standards and fuel requirements for new stationary engines. In the area of consumer and commercial products, the EPA finalized new national VOC emission standards for aerosol coatings in 2008 and will review and revise, as necessary, existing rules for household and institutional consumer products, architectural and industrial maintenance coatings, and automobile refinish coatings. Additionally, in O_3 nonattainment areas, we anticipate reductions of an additional 10,000 tons per year as states adopt rules implementing control techniques recommendations issued in 2008 for four additional categories of consumer and commercial products, such as surface coatings and adhesives used in industrial manufacturing operations. These emission reductions primarily result from solvent controls and typically occur where and when the solvent is used, such as during manufacturing processes.

As noted above, the power industry is responsible for a nearly 15 % of NO_X emissions across the U.S. Power industry emission sources include large electric generating units (EGU) and some large industrial boilers and turbines. The EPA's Clean Air Interstate Rule (CAIR), issued on March 10, 2005 (70 FR 25612; May 12, 2005), was designed to permanently reduce power industry emissions of NO_X in the eastern U.S. The first phase of the cap was to begin in 2009, and a lower second phase cap was to begin in 2015. The EPA had projected that by 2015, the CAIR and other programs would reduce NO_X emissions during the O_3 season by about 50% and annual NO_X emissions by about 60% from 2003 levels in the Eastern U.S. However, on July

11, 2008, and December 23, 2008, the U.S. Court of Appeals for the D.C. Circuit (D.C. Circuit) issued decisions on petitions for review of the CAIR. In its July 11 opinion, the court found CAIR unlawful and decided to vacate CAIR and its associated Federal implementation plans (FIPs) in their entirety. *State of North Carolina v. EPA,* 531 F. 3d 896. On December 23, 2008, however, the court granted EPA's petition for rehearing to the extent that it remanded without vacatur for EPA to conduct further proceedings consistent with the Court's prior opinion. Under this decision, CAIR will remain in place only until replaced by EPA with a rule that is consistent with the Court's July 11 opinion.

The EPA issued the final CSAPR on July 6, 2011 (76 FR 48208; August 8, 2011), to replace CAIR. CSAPR requires states to significantly improve air quality by reducing power plant emissions that contribute to O_3 and/or fine particle pollution in other states. CSAPR requires a total of 28 states to reduce annual SO_2 emissions, annual NO_X emissions and/or O_3 season NO_X emissions to assist downwind states in attaining the 1997 O_3 and fine particle and 2006 $PM_{2.5}$ NAAQS. On December 30, 2011, the D.C. Circuit issued an order staying CSAPR and ordering the EPA to continue implementing CAIR. Subsequently, on August 21, 2012, the D.C. Circuit issued an opinion vacating CSAPR. *EME Homer City Generation LP v. EPA,* 696 F. 3d 7. In its decision the Court again instructed the EPA to continue administering CAIR. The U.S. and other parties appealed the D.C. Circuit decision to the U.S. Supreme Court and on April 29, 2014, the U.S. Supreme Court issued an opinion reversing the judgment of the D.C. Circuit, upholding the EPA's interpretation of the CAA "good neighbor" provision (CAA section 110 (a)(2)(d)(ii)), and remanding the case back to the D.C. Circuit for further proceedings consistent with the Supreme Court opinion. *EME Homer City Generation LP v. EPA*, 134 S. Ct. 1584. On June 26, 2014, the U.S. Government filed a motion with the D.C. Circuit to lift the stay of the

CSAPR. The D.C. Circuit has since lifted the stay of the rule. Order, Document #1518738, *EME Homer City Generation, L.P. v. EPA*, Case #11-1302 (D.C. Cir. Oct. 23, 2014).

The EPA proposed the Clean Power Plan for existing power plants on June 2, 2014 (79 FR 34830; June 18, 2014). In this action the EPA proposed state-specific rate-based goals for CO_2 emissions from the power sector, as well as guidelines for states to follow in developing plans to achieve the state-specific goals. This rule, as proposed, would continue progress already underway to reduce CO_2 emissions from existing fossil fuel-fired power plants in the U.S. Actions taken to comply with the proposed guidelines would reduce emissions of CO_2 and other air pollutants, including SO_2, NOx and directly emitted $PM_{2.5}$, from the electric power industry. The EPA estimates that the Clean Power Plan, as proposed, would reduce precursors for both O_3 and particulate matter leading to decreases in the concentrations of those pollutants of approximately 25% in 2030.

It should also be noted, in general, that new EGUs are subject to NO_X limits under New Source Performance Standards (NSPS) under CAA section 111, as well as either PSD or NNSR requirements. The EPA's regulations for commercial, industrial and solid waste incinerators set standards for NO_X and several air toxics for all commercial incinerators, as required under Section 129 of the Act. Air toxics rules for industrial boilers will yield co-benefit NO_X reductions as a result of tune-ups and energy efficiency measures, especially from boilers that burn coal. And several new source performance standards and air toxics standards are expected to make further cuts to NO_X and VOC emissions from new and existing sources of pollution. These include upcoming review and revisions for gas turbines and municipal waste combustors, along with proposed requirements for the petroleum refining industry. The NSPS and air toxics standards that have recently taken effect for stationary engines will also make cuts to NO_X and

VOC emissions. The EPA also anticipates reductions in O_3 precursors to result from implementation of the Mercury and Air Toxics Standard rule, as well as from measures to address Regional Haze best available retrofit technology (BART) determinations.

While the EPA uses its regulatory opportunities to reduce NO_X and VOCs, the agency also is pursuing non-regulatory efforts as we strive toward cleaner air. Energy Star, a joint program of the EPA and the U.S. Department of Energy, protects the environment and saves money through energy efficient products and practices. Improving energy efficiency in homes, buildings and industry helps reduce all emissions from the power sector – including NO_X – while reducing compliance costs for electricity providers. As part of its new Advance Program, the EPA is working collaboratively with state, local, and tribal governments that want to take steps to reduce air pollution in O_3 and particulate matter attainment areas. Although these areas are not currently subject to nonattainment planning requirements, Advance Program participants are interested in undertaking their own planning efforts with the goal of keeping their air healthy and creating an improved buffer against future air quality violations. Participating areas are implementing a mix of voluntary and mandatory measures relating to mobile, area, and point sources as well as energy efficiency measures, and they are also pursuing education and awareness programs to improve their communities' understanding of air quality issues.

The EPA recognizes that a number of areas of the country have been working to reduce O_3 precursors for many years and now may need to turn to newer, more innovative approaches for reducing emissions as they develop their implementation plans. These approaches, such as smart growth policies and renewable energy portfolios, hold great promise for improved air quality and health, and the EPA is working with air quality agencies and stakeholders to identify ways to include these types of programs in implementation plans. For example, the EPA

developed a roadmap for giving SIP credit to energy efficiency/renewable energy projects.[249] Recognition of innovative programs will allow states and tribes to pursue effective strategies that address some of the more challenging issues affecting air quality, such as land use planning, ever increasing motor vehicle use, and planning for long-term energy needs.

With respect to agricultural sources, the U.S. Department of Agriculture (USDA) has approved conservation systems and activities that reduce agricultural emissions of NO_X and VOC. The EPA recognizes that USDA has been working with the agricultural community to develop site-specific conservation systems and activities to control emissions of O_3 precursors. The EPA will continue to work with USDA on these activities with efforts to identify and/or improve the control efficiencies, prioritize the adoption of these conservation systems and activities, and ensure that appropriate criteria are used for identifying the most effective application of conservation systems and activities.

The EPA will work together with USDA and with states to identify appropriate measures to meet the primary and secondary standards, including site-specific conservation systems and activities. Based on prior experience identifying conservation measures and practices to meet the PM NAAQS requirements, the EPA will use a similar process to identify measures that could meet the O_3 requirements. The EPA anticipates that certain USDA approved conservation systems and activities that reduce agricultural emissions of NO_X and VOC may be able to satisfy the requirements for applicable sources to implement reasonably available control measures for purposes of attaining the primary and secondary O_3 NAAQS.

---

[249] "The Roadmap for Incorporating Energy Efficiency/Renewable Energy Policies and Programs into State and Tribal Implementation Plans," (July 2012) at *http://epa.gov/airquality/eere/*.

The agency also is active in work to reduce the international transport of O_3 and other pollutants that can contribute to "background" O_3 levels in the U.S. Under the Convention on Long-Range Transboundary Air Pollution (LRTAP) of the United Nations Economic Commission for Europe, the U.S. has been a party to the Protocol to Abate Acidification, Eutrophication, and Ground-level Ozone (known as the Gothenburg Protocol) since 2005. The U.S. is also active in the LRTAP Task Force for Hemispheric Transport of Air Pollution, which in 2010 produced a comprehensive assessment of the intercontinental transport of air pollution (including O_3) in the northern hemisphere.

The U.S. has worked bilaterally with Canada under the US-Canada Air Quality Agreement to adopt an Ozone Annex to address transboundary O_3 impacts. The EPA also continues to work with rapidly growing countries such as China on air quality management activities and the development of analytical tools to help these countries address significant air quality problems, including the emissions of O_3-forming pollutants. This work includes supporting China's efforts to rapidly deploy power plant pollution controls that can achieve NO_X reductions of at least 80 to 90%.

We know that developing the implementation plans that outline the steps a nonattainment area will take to meet an air quality standard requires a significant amount of work on the part of state, tribal or local air agencies. The EPA routinely looks for ways to reduce this workload, including assisting with air quality modeling by providing inputs such as emissions, meteorological and boundary conditions; and sharing national-scale model results that states can leverage in their development of their attainment demonstrations. At the same time, we work with air agencies to provide implementation flexibility to the extent allowed by law.

2. Timing of Rules and Guidance

In public comment periods associated with several recent rulemakings, the EPA received comments from a variety of states and organizations asking for rules and guidance associated with a revised NAAQS to be issued in a timely manner. Although issuance of such rules and guidance is not a part of the NAAQS review process, *National Ass'n of Manufacturers v*. EPA, 750 F. 3d 921, 926-27 (D.C. Cir. 2014), toward that end the EPA intends to produce appropriate revisions to necessary implementation rules and provided additional guidance in time frames that would be more useful to states when developing their implementation plans than has been the case with some previous rules and guidance.

Certain requirements under the PSD preconstruction permit review program apply immediately to a revised NAAQS upon the effective date of that NAAQS, unless the EPA has established a grandfathering provision through rulemaking. To ensure a smooth transition to a revised O_3 NAAQS, the EPA is proposing a grandfathering provision similar to the one finalized in the 2012 $PM_{2.5}$ NAAQS Rule. *See* section VII.D of this preamble for more details on the PSD program.

Promulgation of the NAAQS starts a clock for the EPA to designate areas as either attainment or nonattainment. State recommendations for area designations are due to the EPA within 12 months of promulgation of the NAAQS. In an effort to allow states to make more informed recommendations, the EPA intends to issue guidance concerning the designations process within 4 months of promulgation of the NAAQS, or approximately 8 months before state recommendations are due. The EPA has issued designation guidance for several NAAQS in recent years. While generally the EPA considers information related to the same factors in making designation decisions, the guidance is tailored to the particular NAAQS. The EPA anticipates that the guidance for a revised NAAQS resulting from this proposal would be similar

to the designation guidance for the 2008 O_3 NAAQS. The EPA generally completes area designations 2 years after promulgation of a NAAQS. *See* section VII.C of this preamble for additional details on designations.

Clean Air Act section 110 requires SIPs to be submitted within 3 years of promulgation of a revised NAAQS. These SIPs are referred to as "infrastructure SIPs." The EPA issued general guidance on submitting infrastructure SIPs on September 13, 2013.[250] It should be noted that this guidance did not address certain state planning and emissions control requirements related to interstate pollution transport. Should this guidance need to be modified for this prospective O_3 NAAQS, the EPA intends to issue that updated guidance no later than 1 year after promulgation of a revised O_3 NAAQS. *See* section VII.B.3 of this preamble for additional information on infrastructure SIPs.

The EPA intends to propose any appropriate rules for assisting with implementing any revised O_3 NAAQS resulting from this proposal within 1 year after a revised NAAQS is established. The rules that EPA is considering, as with implementation of previous NAAQS, would address nonattainment area classification methodologies, SIP due dates, attainment dates, and required implementation programs such as NNSR and conformity. At that same time the EPA intends to address any modifications needed as a result of this revised NAAQS to guidance pertaining to developing nonattainment area emissions inventories and attainment demonstrations, and demonstrating conformity. The EPA anticipates finalizing these items by the time areas are designated nonattainment. Finalizing rules and guidance by this time would provide air agencies with the information to develop any CAA-required SIPs associated with

[250] *See* memorandum from Stephen D. Page to Regional Air Directors, "Guidance on Infrastructure State Implementation Plan (SIP) Elements under Clean Air Act Sections 110(a)(1) and 110(a)(2)" September 13, 2013.

nonattainment designations. In an area designated as nonattainment, new major sources and major modifications at existing sources are required to comply with NNSR requirements including the application of "lowest achievable emission rate" (LAER) and emissions offsets at ratios prescribed by the CAA. *See* section VII.B.4 of this preamble for additional information on nonattainment SIPs.

3. Section 110 State Implementation Plans

The CAA section 110 specifies the general requirements for SIPs. Within 3 years after the promulgation of revised NAAQS (or such shorter period as the Administrator may prescribe[251]) each state must adopt and submit ''infrastructure'' SIPs to the EPA to address the requirements of section 110(a)(1) and (2), as applicable. These ''infrastructure SIPs'' establish the basic state programs to implement, maintain, and enforce revised NAAQS and provide assurances of state resources and authorities. States are to develop and maintain an air quality management infrastructure that includes enforceable emission limitations, a permitting program, an ambient monitoring program, an enforcement program, air quality modeling capabilities, and adequate personnel, resources, and legal authority. Section 110(b) of the CAA provides that the EPA may extend the deadline for the ''infrastructure'' SIP submission for a revised secondary standard by up to 18 months beyond the initial 3 years. If both the primary NAAQS and a distinct secondary NAAQS are finalized, the EPA currently believes it would be more efficient for states and the EPA if each affected state submits a single section 110 infrastructure SIP that addresses both standards at the same time (i.e., within 3 years of promulgation of the O_3 NAAQS), because the EPA does not at present discern any need for there to be any significant

[251] While the CAA allows the EPA to set a shorter time for submission of these SIPs, the EPA does not currently intend to do so.

substantive difference in the infrastructure SIPs for the two standards. However, the EPA also recognizes that states may prefer the flexibility to submit the secondary NAAQS infrastructure SIP at a later date. The EPA solicits comment on these infrastructure SIP submittal timing considerations, and specifically on challenges that would justify needing 18 additional months to complete the submission of an infrastructure SIP for the secondary standard.

It is the responsibility of each state to review its air quality management program's infrastructure SIP provisions in light of each revised NAAQS. Most states have revised and updated their infrastructure SIPs in recent years to address requirements associated with recently revised NAAQS. It may be the case that for a number of infrastructure elements, the state may believe it has adequate state regulations already adopted and approved into the SIP to address a particular requirement with respect to the revised O_3 NAAQS. For such portions of the state's infrastructure SIP submittal, the state may provide a ''certification'' specifying that certain existing provisions in the SIP are adequate. Although the term ''certification'' does not appear in the CAA as a type of infrastructure SIP submittal, the EPA sometimes uses the term in the context of infrastructure SIPs, by policy and convention, to refer to a state's SIP submission. If a state determines that its existing EPA-approved SIP provisions are adequate in light of the revised O_3 NAAQS with respect to a given infrastructure SIP element (or sub-element), then the state may make a "certification" that the existing SIP contains provisions that address those requirements of the specific CAA section 110(a)(2) infrastructure elements. In the case of a certification, the submittal does not have to include another copy of the relevant provision (e.g., rule or statute) itself. Rather, the submittal may provide citations to the already SIP-approved state statutes, regulations, or non-regulatory measures, as appropriate, which meet the relevant CAA requirement. Like any other SIP submittal, such certification can be made only after the

state has provided reasonable notice and opportunity for public hearing. This ‘‘reasonable notice and opportunity for public hearing’’ requirement for infrastructure SIP submittals appears at section 110(a), and it comports with the more general SIP requirement at section 110(l) of the CAA. Under the EPA’s regulations at 40 CFR part 51, if a public hearing is held, an infrastructure SIP submittal must include documentation by the state that the public hearing was held in accordance with the EPA’s procedural requirements for public hearings. See 40 CFR part 51, Appendix V, paragraph 2.1(g), and 40 CFR 51.102.

4. Nonattainment Area Requirements

Part D of the CAA describes the various program requirements that apply to states with nonattainment areas for different NAAQS. Section 182 (found in subpart 2 of Part D) includes the SIP requirements that govern the O_3 program, and supplements the more general nonattainment area requirements in sections 172 and 173. Under CAA section 182, states generally are required to submit attainment demonstration SIPs within 3 or 4 years of the effective date of area designations by the EPA, depending on the classification of the area. These plans need to show how the nonattainment area will attain the primary O_3 standard ‘‘as expeditiously as practicable,’’ but no later than within the relevant time frame from the effective date of designations associated with the classification of the area.

Section 181(a)(1) of the CAA establishes classification categories for areas designated nonattainment for the primary O_3 NAAQS. These categories range from “Marginal,” the lowest O_3 classification with the fewest requirements associated with it, to “Extreme,” the highest classification with the most required programs. Areas with worse O_3 problems are given more time to attain the NAAQS and more associated emission control requirements. Pursuant to previous O_3 NAAQS reviews, the EPA set the secondary NAAQS equal to the primary NAAQS.

Thus, previous implementation programs for O_3 standards did not include a separate classification threshold methodology for the secondary NAAQS. For this NAAQS review, which may result in a secondary standard different in form and level compared to the primary standard, the EPA is considering methodologies for establishing the air-quality based thresholds for assigning the section 181 classifications to areas out of attainment with a secondary O_3 NAAQS. Any such methods would be proposed for comment if the EPA finalizes a distinct secondary NAAQS.

There are two main EPA rulemakings relating to implementation of the 2008 O_3 NAAQS. In May 2012, the EPA issued the final Classifications Rule (77 FR 30160; May 21, 2012). The Classifications Rule detailed the classifications approach, established attainment deadlines and revoked the 1997 O_3 NAAQS for purposes of transportation conformity. In June 2013, the EPA proposed a SIP Requirements Rule (78 FR 34178; June 6, 2013) to provide rules and guidance to states regarding development of SIPs to attain the 2008 O_3 NAAQS. The EPA believes that the overall framework and policy approach of the proposed SIP Requirements Rule for the 2008 O_3 NAAQS provides an effective and appropriate template for the general approach states would follow in planning for attainment of a revised primary O_3 standard. The EPA intends to develop and propose a new SIP Requirements Rule that will address, to the extent necessary, any new implementation requirements that would result from any revised O_3 NAAQS. The EPA intends to propose this implementation rule within 1 year after the revised O_3 NAAQS are promulgated, and finalize the implementation rule by no later than the time the area designations process is finalized (approximately 2 years after promulgation of the O_3 NAAQS).

In general, when developing an attainment plan, the state begins with the evaluation of the air quality improvements the nonattainment area can expect in the future due to ‘‘on the

books'' existing federal, state, and local emission reduction measures. The state then must conduct a further assessment of relevant NO_X and VOC emission sources in the nonattainment area, and the additional reasonably available control measures (RACM) and reasonably available control technology (RACT) that can be implemented by these sources, in determining how soon the area can attain the standard. Under section 172(c)(1) of the CAA as interpreted by the EPA, attainment demonstrations must include a RACM analysis showing that no additional reasonably available measures could be adopted and implemented such that the SIP could specify an attainment date that is 1 or more years earlier.

The evaluation of these potential emissions reductions and associated air quality improvement is commonly performed with sophisticated air quality modeling tools. Given that O_3 concentrations are affected both by regionally-transported O_3 and O_3 precursor emissions and emissions of precursors from local sources in the nonattainment area (e.g., industrial sources, EGUs, and on-road mobile sources), the EPA recommends the use of regional grid-based models (such as CMAQ and CAMx) to develop O_3 attainment strategies. Although, as described above, the EPA projects significant improvements in O_3 concentrations regionally resulting from a number of ongoing emission reduction programs already in place (e.g., mobile source engine and fuel standards and regulations for power plants) and from a number of recently promulgated rules such as the Cross State Air Pollution Rule (76 FR 48208; August 8, 2011), the Mercury and Air Toxics Standards rule (77 FR 9304; February 16, 2012) and the Tier 3 rule (79 FR 23414; April 28, 2014) that will result in VOC and NO_X reductions from many geographically dispersed sources, local reductions of direct O_3 precursors can also result in important health benefits.

States must also ensure that a nonattainment area will make ''reasonable further progress'' (RFP) in accordance with subpart 2 of the CAA from the time of the nonattainment

designation to its attainment date. The amount of RFP required is based on the classification of the nonattainment area. Under the approach outlined in the proposed SIP Requirements Rule for the 2008 O_3 NAAQS, areas designated nonattainment and classified as Moderate would generally be required to reduce emissions by 15% over the first six years after the effective date of designations. Areas classified higher than Moderate would be required to produce additional emission reductions after this 6-year period for an area that average 3% reductions per year. All RFP and attainment plans must also include contingency measures which would apply without significant delay in the event the area fails to attain by its attainment date or meet RFP milestones.

The EPA expects that the same general approach for determining attainment of the previous 1997 and 2008 8-hour O_3 primary standards by the attainment deadline would be followed for determining attainment with any revised primary O_3 standard. Attainment would be evaluated based on the 3 most recent years of certified, complete, and quality-assured air quality data in the nonattainment area. Areas are able to obtain up to two 1-year attainment date extensions provided under CAA section 181 under certain circumstances. Under previous 8-hour O_3 NAAQS rules, an area whose design value based on the most recent 3 years of data exceeds the standard could receive a 1-year attainment date extension if the air quality concentration for the third year alone does not exceed the level of the standard. Similarly, an area that has received a 1-year extension could receive a second 1-year extension if the average of the area's air quality concentration in the ''extension year'' and the previous year does not exceed the level of the standard.

B. Implementing a Distinct Secondary O_3 *NAAQS, if One is Established*

In each of the previous O_3 NAAQS reviews the secondary standard was set equal to the primary standard. As discussed in section IV of this preamble, the EPA is proposing to retain the current averaging time and form of the secondary standard and to revise the level. The EPA is also soliciting comment on the alternative approach of revising the secondary standard to a cumulative, seasonal, concentration-weighted form based on the W126 index.

If the EPA were to establish a distinct secondary standard, there would be unique implementation issues to consider. These could include issues related to, but not limited to, PSD implementation, nonattainment area classification thresholds, attainment planning, and conformity demonstrations. These issues would be addressed in future implementation rules and guidance, as necessary. The EPA solicits comments on the specific kinds of implementation-related issues (with examples, where possible) that air agencies and affected sources would face if a separate and distinct secondary standard is established.

C. Designation of Areas

After the EPA establishes or revises a NAAQS, the CAA directs the EPA and the states to take steps to ensure that the new or revised NAAQS is met. One of the first steps, known as the initial area designations, involves identifying areas of the country that either do not meet the new or revised NAAQS along with the nearby areas that contribute to the violations.

Section 107(d)(1) of the CAA provides that, "By such date as the Administrator may reasonably require, but not later than 1 year after promulgation of a new or revised national ambient air quality standard for any pollutant under section 109, the Governor of each state shall... submit to the Administrator a list of all areas (or portions thereof) in the state" that designates those areas as nonattainment, attainment, or unclassifiable. The EPA must then promulgate the area designations according to a specified process, including procedures to be

followed if the EPA intends to modify a recommendation. The CAA defines an area as nonattainment if it is violating the NAAQS or if it is contributing to a violation in a nearby area.

Section 107(d)(1)(B)(i) further provides, "Upon promulgation or revision of a national ambient air quality standard, the Administrator shall promulgate the designations of all areas (or portions thereof)... as expeditiously as practicable, but in no case later than 2 years from the date of promulgation of the new or revised national ambient air quality standard. Such period may be extended for up to one year in the event the Administrator has insufficient information to promulgate the designations." In certain contexts, with respect to the NAAQS, the term "promulgation" has been interpreted by the courts to be signature and widespread dissemination of a final NAAQS rule.[252] By no later than 120 days prior to promulgating area designations, the EPA is required to notify states of any intended modifications to their recommendations that the EPA may deem necessary. States then have an opportunity to demonstrate why any proposed modification is inappropriate. Whether or not a state provides a recommendation, the EPA must timely promulgate the designation that the agency deems appropriate.

While section 107 of the CAA specifically addresses states, the EPA intends to follow the same process for tribes to the extent practicable, pursuant to CAA section 301(d) regarding tribal authority and the Tribal Authority Rule (63 FR 7254, February 12, 1998). To provide clarity and consistency in doing so, the EPA issued a 2011 guidance memorandum on working with tribes during the designation process.[253]

---

[252] *American Petroleum Institute v. Costle*, 609 F.2d 20 (D.C. Cir. 1979).
[253] Page, S. (2011). Guidance to Regions for Working with Tribes during the National Ambient Air Quality Standards (NAAQS) Designations Process, Memorandum from Stephen D. Page, Director, EPA Office of Air Quality Planning and Standards to Regional Air Directors, Regions I-X, December 20, 2011. Available: http://www.epa.gov/ttn/oarpg/t1/memoranda/20120117naaqsguidance.pdf.

As discussed in sections II and IV of this preamble, the EPA is proposing to revise both the primary and secondary O_3 NAAQS, which currently are identical 8-hour standards that were set at 0.075 ppm in the 2008 NAAQS rule (73 FR 16436; March 27, 2008). If the EPA revises the primary and secondary O_3 NAAQS based on this proposal, the EPA intends to complete designations for both NAAQS following the standard 2-year process discussed above. The EPA is required to sign the final rule for this O_3 NAAQS review no later than October 1, 2015, under a court-ordered deadline. In accordance with section 107(d)(4) of the CAA, state Governors (and tribes, if they choose) should submit their initial designation recommendations for a revised primary and secondary NAAQS no later than 1 year after promulgation of any revised O_3 NAAQS (for example, by October 1, 2016, if the EPA promulgates such NAAQS on October 1, 2015.) If the EPA intends to modify any state recommendation, the EPA would notify the appropriate state Governor (or tribal leader) no later than 120 days prior to making final designation decisions. A state or tribe that believes the modification is inappropriate would then have the opportunity to demonstrate to EPA why it believes its original recommendation (or a revised recommendation) is more appropriate. The EPA would take any additional input into account in making the final designation decisions.

Consistent with previous designations, the EPA intends to use area-specific multi-factor analyses to support area boundary decisions for any revised primary or secondary O_3 standards. Historically, the EPA has evaluated information related to the following factors for designations: air quality data, emissions-related data, meteorology, geography/topography, and jurisdictional boundaries. The EPA solicits comment related to establishing area designation boundaries for the proposed revised primary and secondary NAAQS, including any relevant technical information

---

xx

that should be considered by the EPA and the extent to which different considerations may be relevant to establishing boundaries for a distinct secondary NAAQS. As noted earlier, the EPA intends to issue designation guidance to the states shortly after the promulgation of any revised O_3 NAAQS to provide information on the designation process and to assist states in developing their recommendations. The EPA invites preliminary comment on all aspects of the designation process at this time, which the EPA will consider in developing that guidance.

D. Prevention of Significant Deterioration and Nonattainment New Source Review Programs for the Proposed Revised Primary and Secondary O_3 NAAQS

The CAA, at parts C and D of title I, contains NSR requirements that constitute preconstruction review and permitting programs applicable to new major stationary sources and major modifications of existing major sources. The preconstruction review of each new major source and major modification generally applies on a pollutant-specific basis, and the requirements that apply for each pollutant generally depend on whether the area is designated as attainment (or unclassifiable) or nonattainment for that pollutant. For the O_3 NAAQS, in areas designated attainment and unclassifiable, the PSD requirements under part C apply. In nonattainment areas for O_3, the NNSR requirements under part D apply. Collectively, those two sets of permit requirements are commonly referred to as the "major NSR programs."

Until areas are designated for the proposed revised O_3 NAAQS, the NSR provisions applicable under an area's designation for the 2008 NAAQS (including any applicable anti-backsliding requirements) would continue to apply. *See* 40 CFR 51.166(i)(2) and 52.21(i)(2). When the new designations for any revised O_3 NAAQS are effective, they generally will serve to determine whether the PSD or nonattainment NSR program applies.

1. Prevention of Significant Deterioration (PSD)

The statutory requirements for a PSD permit program set forth under part C (sections 160 through 169 of the CAA) are addressed by the EPA's PSD regulations found at 40 CFR 51.166 (minimum requirements for an approvable SIP) and 40 CFR 52.21 (federal PSD permit program for areas lacking an EPA-approved PSD program in the applicable SIP and for lands owned by the federal government and tribal lands). Both sets of regulations already apply to O_3. *See* 40 CFR 51.166(b)(23), (49); 40 CFR 52.21(b)(23), (50).. Among other things, in attainment and unclassifiable areas, the PSD program requires a new major stationary source or a major modification to an existing major source to apply BACT for each applicable pollutant and to conduct an air quality impact analysis to demonstrate that the proposed source or project will not cause or contribute to a violation of any NAAQS or PSD increment (*see* CAA section 165(a)(3)-(4), 40 CFR 51.166(j)-(k), 40 CFR 52.21(j)-(k)). PSD requirements may also include, in appropriate cases, an analysis of potential adverse impacts on Class I areas (*see* CAA sections 162 and 165).[254] These existing requirements of the PSD program will remain applicable to O_3 and the demonstration required under 40 CFR 51.166(k) and 52.21(k) will apply to any revised O_3 NAAQS when such NAAQS become effective, except to the extent that a pending permit application is subject to a grandfathering provision that the EPA establishes through rulemaking.

To address ambient O_3 impacts of VOC and NO_X precursor emissions from individual stationary sources, Appendix W to 40 CFR part 51 currently directs states to consult with the applicable EPA Regional Office to determine the appropriate techniques on a case-by-case basis, which may or may not involve the use of air quality models, for evaluating whether a PSD

[254] Congress established certain Class I areas in section 162(a) of the CAA, including international parks, national wilderness areas, and national parks that meet certain criteria. Such Class I areas, known as mandatory federal Class I areas, are afforded special protection under the CAA. In addition, states and tribal governments may establish Class I areas within their own political jurisdictions to provide similar special air quality protection.

source causes or contributes to a violation of the O_3 NAAQS (40 CFR part 51, Appendix W, section 5.2.1.c). At present, the EPA is evaluating the models and techniques available to address atmospheric chemistry of O_3 formation in assessing such single source impacts, and as part of that evaluation has conducted discussions of such tools with the regulatory modeling community. Consistent with its commitment to engage in a rulemaking process to determine whether updates to Appendix W in 40 CFR part 51 are warranted,[255] the EPA is planning to propose a rulemaking in the spring of 2015 to consider whether to update Appendix W. If the EPA concludes that it is technically and scientifically appropriate, it will propose appropriate regulatory updates to Appendix W as part of that rulemaking and may also make related updates to technical guidance, as appropriate. In the meantime, in order to demonstrate that a proposed source or modification does not cause or contribute to a violation of the applicable O_3 NAAQS, PSD permit applicants would follow the current provisions in Appendix W until any revisions to them are in effect.

For PSD, a "major stationary source" is one with the potential to emit 250 tons per year (TPY) or more of any regulated NSR pollutant, unless the new or modified source is classified under a list of 28 source categories contained in the statutory definition of "major emitting facility" in section 169(1) of the CAA. For those 28 source categories, a "major stationary source" is one with the potential to emit 100 TPY or more of any regulated NSR pollutant. A "major modification" is a physical change or a change in the method of operation of an existing major stationary source that results first, in a significant emissions increase of a regulated NSR

[255] *See* Letter from Gina McCarthy, Assistant Administrator, to Robert Ukeiley, at 1 (Jan. 4, 2012), available at http://www.epa.gov/scram001/10thmodconf/review_material/Sierra_Club_Petition_OAR-11-002-1093.pdf.

pollutant at a project, and second, in a significant net emissions increase of that pollutant at the source.[256] *See* 40 CFR 51.166(b)(2)(i), 40 CFR 52.21(b)(2)(i).

The EPA's regulations define the term "regulated NSR pollutant" to include "[a]ny pollutant for which a [NAAQS] has been promulgated and any pollutant identified [in EPA regulations] as a constituent or precursor to such pollutant" (40 CFR 51.166(b)(49); 40 CFR 52.21(b)(50)). These regulations identify VOC and NO_X as precursors to O_3 in all attainment and unclassifiable areas (40 CFR 51.166(b)(49)(i)(a); 40 CFR 52.21(b)(50)(i)(a)). Thus, for O_3, the PSD program currently requires the review and control of emissions of VOC and NO_X, as applicable, as precursors of O_3.

As noted above, section 165(a)(3) of the CAA and the implementing PSD regulations require the owner or operator of a proposed facility to, among other things, demonstrate that "emissions from construction or operation of such facility will not cause, or contribute to, air pollution in excess of any … national ambient air quality standard in any air control region." *See also* 40 CFR 51.166(k), 40 CFR 52.21(k). The EPA has interpreted this requirement to include any NAAQS that is in effect as of the date a permit is issued, unless it has grandfathered permit applications from the requirement to demonstrate that the proposed facility does not cause or

[256] As explained in 40 CFR 52.21(a)(2)(iv)(a) and 51.166(a)(7)(iv)(a), "[t]he project is not a major modification if it does not cause a significant emissions increase. If the project causes a significant emissions increase, then the project is a major modification only if it also results in a significant net emissions increase." The PSD regulations at 40 CFR 51.166(a)(7) and 52.21(a)(2) also explain in more detail the two-pronged test for determining whether a proposed project at a facility is a major modification.

contribute to a violation of the new or revised NAAQS.[257] S*ee, e.g.*, 73 FR 28321, 28324, 28340 (May 16, 2008); 78 FR 3253 (Jan. 15, 2013); Memorandum from Stephen D. Page, Director, Office of Air Quality Planning & Standards, "Applicability of the Federal Prevention of Significant Deterioration Permit Requirements to New and Revised National Ambient Air Quality Standards" (April 1, 2010). Consistent with this interpretation, any revised O_3 NAAQS finalized through this rulemaking will need to be addressed by PSD permit applicants and permitting authorities, in permits issued on or after the date when the revised NAAQS become effective, unless the permit application has been grandfathered through rulemaking, as described below in this proposal.

Because the complex chemistry of O_3 formation poses significant challenges for the assessing the impacts of individual stationary sources on O_3 formation, the EPA's judgment has been that it was not technically sound to designate a specific air quality model that must be used in the PSD permitting process to make this demonstration for O_3.[258] The EPA has explained that sources must make the demonstration required under CAA section 165(a)(3) and the implementing regulations, that this demonstration necessarily involves an analysis, and has

---

[257]In the past the EPA has asserted the discretion to take such grandfathering action, under appropriate circumstances, either by rulemaking or through a case-by-case determination for a specific permit application. The United States Court of Appeals for the Ninth Circuit recently vacated a decision by the EPA to issue an individual PSD permit grandfathering a permit applicant from certain requirements. *See Sierra Club v. EPA*, 762 F.3d 971 (9th Cir. 2014). In light of that decision, the EPA is no longer asserting authority to grandfather permit applications on a case-by-case basis. However, in the same opinion the court also stated that it did "not doubt, or express any opinion on, the EPA's traditional authority to employ formal rulemaking to implement grandfathering" and distinguished that authority from the permit-specific grandfathering at issue in the case before it. *Id.*, at 982, n.7 & 982-983. Thus, the EPA does not interpret this opinion to limit its authority to grandfather through rulemaking, but rather believes that the decision offers support for such authority.

[258] Letter from Gina McCarthy, Assistant Administrator, to Robert Ukeiley, at 2 (Jan. 4, 2012), available at http://www.epa.gov/scram001/10thmodconf/review_material/Sierra _Club_Petition_OAR-11-002-1093.pdf.

established a process to determine on a case-by-case basis, in consultation with the appropriate EPA Regional Office, what analytical techniques should be used to assess the impact of an individual source[259] (40 CFR Part 51, Appendix W, Section 5.2.1.c). The EPA has, however, granted a petition from Sierra Club requesting, among other things, that it initiate rulemaking to designate air quality models for O_3, and consistent with that petition grant, has been going through a process to evaluate potential updates to Appendix W.[260] While that process is underway, individual sources should continue to follow the existing procedures to determine what method is appropriate to use to evaluate their impacts on O_3 formation.

The PSD rules in 40 CFR 51.166(i)(2) and 52.21(i)(2) contain an exemption for particular pollutants from the PSD requirements if the owner or operator of the source demonstrates that the area in which the facility is located is designated as nonattainment for that pollutant under CAA section 107. Thus, new major sources and modifications will generally be subject to the PSD program requirements for O_3 if they are locating in an area that does not have a current nonattainment designation under CAA section 107 for O_3. As explained in the recent proposal for the implementation rule for the 2008 O_3 NAAQS, references to historical nonattainment designations for a revoked standard should not be viewed as current "nonattainment designation[s] under CAA section 107" within the meaning of 40 CFR 51.166(i)(2) and 52.21(i)(2) and, therefore, do not trigger the exemption from PSD requirements that would otherwise result from those provisions (78 FR 34216, June 6, 2013).

a. PSD Grandfathering Provision

[259] *See, e.g., id.*
[260] *See id.* at 1 and 3.

Recognizing that some PSD applications may have already been submitted and could be in the review process when a revised O_3 NAAQS becomes effective, the EPA is proposing a transition plan that would enable certain PSD applications to make the demonstration that the proposed project will not cause or contribute to a violation of any NAAQS with respect to the O_3 NAAQS that were in effect on the date the reviewing authority determines the permit application complete or the date the public notice on the draft permit or preliminary determination is first published (depending on which grandfathering provision applies), rather than the revised O_3 NAAQS.[261]

The EPA is proposing and taking comment on adding a grandfathering provision to EPA's regulations at 40 CFR 51.166 and 52.21 that would apply specifically to two categories of PSD permit applications that are pending when the EPA issues the revised O_3 NAAQS: (1) applications for which the reviewing authority has formally determined that the application is complete on or before the signature date of the revised NAAQS; and (2) applications for which the reviewing authority has first published a public notice of a draft permit or preliminary determination before the effective date of the revised NAAQS. These two categories are proposed because some states do not do completeness determinations as part of their permit process.

[261] The proposed grandfathering provision is intended to apply to pending PSD permit applications that meet one or both of the specified criteria and that are for sources locating in areas where PSD continues to apply with respect to O_3 at the time the permit is issued. The proposed grandfathering provision is not intended to apply to sources locating in areas where NNSR applies at the time of permit issuance (for example, if the area had been designated as attainment for O_3 when the permit application was submitted but was subsequently designated as nonattainment for O_3 and that nonattainment designation would be in effect when the permit would be issued). For such sources, the permit application must be resubmitted in accordance with the applicable NNSR requirements.

As explained above, the EPA interprets the CAA and implementing PSD regulations at 40 CFR 52.21(k)(1) and 51.166(k)(1) to require that PSD permit applications must include a demonstration that new major sources and major modifications will not cause or contribute to a violation of any NAAQS that is in effect as of the date the PSD permit is issued. Thus, if the EPA revises the O_3 NAAQS, any proposed new source or modification with a PSD permit application pending at the time the revised O_3 NAAQS takes effect would be expected to conduct an analysis to demonstrate that it does not cause or contribute to a violation of that NAAQS, absent some type of transition provision exempting the application from that requirement. This demonstration, as noted above, should be completed in consultation with the applicable EPA Regional Office.

Nevertheless, the agency has previously recognized that the CAA provides discretion for the EPA to grandfather PSD permit applications from requirements that become applicable while the applications are pending (45 FR 52683, August 7, 1980; 52 FR 24672, July 1, 1987; 78 FR 3086, January 15, 2013). As discussed in more detail in these referenced actions, section 165(a)(3) of the CAA requires that a permit applicant demonstrate that its proposed project will not cause or contribute to a violation of any NAAQS. At the same time, section 165(c) of the CAA requires that a PSD permit be granted or denied within 1 year after the permitting authority determines the application for such permit to be complete. In addition, section 301 of the CAA authorizes the Administrator "to prescribe such regulations as are necessary to carry out his functions under this chapter." When read in combination, these three provisions of the CAA provide the EPA with the discretion to issue regulations to grandfather pending permit applications from having to address a revised NAAQS where necessary to achieve both CAA objectives to protect the NAAQS and to avoid delays in processing PSD permit applications.

Moreover, in a recent opinion the U.S. Court of Appeals for the Ninth Circuit recognized the EPA's traditional exercise of grandfathering authority through rulemaking and indicated that this approach was consistent with statutory requirement to "enforce whatever regulations are in effect at the time the agency makes a final decision" because it involved identifying "an operative date, incident to setting the new substantive standard, and the grandfathering of pending permit applications was explicitly built into the new regulations." *Sierra Club v. EPA*, 762 F.3d 971, 983 (9th Cir. 2014).

In the EPA's most recent adoption of a grandfathering provision for PSD, it adopted a provision for $PM_{2.5}$ that provides a reasonable transition for implementing certain new PSD requirements related to the 2012 $PM_{2.5}$ NAAQS for pending permit applications that have met certain criteria. As finalized, the $PM_{2.5}$ grandfathering provision included the same two categories of permit applications that today are being proposed for O_3. *See* 40 CFR 51.166(i)(10) and 52.21(i)(11). In the rulemaking, adding the grandfathering provision for the $PM_{2.5}$ NAAQS, the EPA also provided a detailed rationale and legal basis for including the grandfathering provision in the PSD program. *See* 78 FR 3087 at 3253-59 (January 15, 2013); *see also* 77 FR 39023-24 (June 29, 2012).

When the $PM_{2.5}$ NAAQS grandfathering provision was originally proposed, the EPA provided for only one category of pending PSD applications—applications for which the reviewing authority has published a public notice on the draft permit prior to the effective date of the revised $PM_{2.5}$ NAAQS. A majority of the commenters supported the adoption of a grandfathering provision but some responded that a grandfathering milestone based on the submittal of a complete application would be more appropriate in order to avoid significant burdens associated with having to withdraw an application. These commenters pointed out the

significant level of effort, resources and time involved in preparing all of the information necessary for a complete permit application. They claimed that it would be unfair to establish grandfathering milestones beyond the complete application date because the processes and timeframe involved in generating the draft permit or preliminary determination materials and publishing the public notice are largely out of the control of the permit applicant and vary from agency to agency.

Based on this and other pertinent information provided by the commenters, the EPA concluded in that rulemaking that it should add an additional grandfathering milestone to avoid substantial additional burden and delay for permit applications that have reached a stage in the review process by which significant resources have been expended to complete PSD analyses and demonstrations that would have to be redone to address the revised NAAQS. Accordingly, the EPA adopted a grandfathering provision for the $PM_{2.5}$ NAAQS in the final rule that included two milestones for establishing grandfathering eligibility. The EPA believes that these considerations and this rationale also apply to pending PSD permit applications that would be affected by a revised O_3 NAAQS. Accordingly, the EPA is proposing to apply these same two milestones in this proposed rulemaking for the revised O_3 NAAQS.

The proposed grandfathering provision does not apply to any applicable PSD requirements related to O_3 other than the requirement to demonstrate that the proposed source does not cause or contribute to a violation of any revised O_3 NAAQS. Sources with projects qualifying under the grandfathering provision will be required to apply BACT to all applicable pollutants, demonstrate that the project emissions will not cause or contribute to a violation of the existing O_3 NAAQS, and address any Class I area and additional O_3-related impacts in accordance with the PSD regulatory requirements.

For the reasons provided both herein and in the prior EPA actions referenced above, the EPA proposes to amend the federal PSD permitting regulations at 40 CFR 52.21 to add the described grandfathering provision for the proposed O_3 NAAQS revision. Specifically, the proposed provision provides that qualifying new sources and modifications seeking PSD permits under 40 CFR 52.21 shall not be required to demonstrate that their proposed emissions will not cause or contribute to a violation of the revised O_3 NAAQS, but instead must demonstrate that their proposed emissions will not cause or contribute to a violation of the O_3 NAAQS in effect on the date the reviewing authority determines the permit application complete or the date the public notice on the draft permit or preliminary determination is first published, depending on which prong of the grandfathering provision is applicable for that source. *See* proposed 40 CFR 52.21(i)(12).

For sources subject to the PSD program under section 52.21, it should be noted that the EPA intends for a source that satisfies either milestone in the proposed revisions to section 52.21(i) to be grandfathered from this requirement if those revisions are finalized. Accordingly, if a particular source does not qualify under the first milestone based on a complete application, it may qualify under the second milestone based on the issuance of a public notice. Conversely, a source may qualify for grandfathering under the first milestone, even if it does not satisfy the second. As explained below, states with EPA-approved PSD programs in their SIPs would have additional flexibility for implementing the proposed grandfathering provision to the extent that any alternative approach is at least as stringent as the federal provision.

The EPA also proposes that states that issue PSD permits under a SIP-approved PSD permit program should have discretion to "grandfather" pending PSD permits in the same manner under these same circumstances. Therefore, the EPA is proposing to revise its rules at 40

CFR 51.166 to provide a comparable exemption applicable to SIP-approved PSD programs, although such states are under no obligation to grandfather. *See* proposed 40 CFR 51.166(i)(11). The EPA recognizes that such states interested in grandfathering PSD sources for O_3 will not have time to revise their rules and submit them to the EPA for approval into the SIP, since the need to grandfather sources will occur immediately upon the effective date of the revised O_3 NAAQS. As explained in an earlier rulemaking, the EPA believes that states implementing a SIP-approved PSD program have the discretion to allow grandfathering consistent with the grandfathering provision contained in the federal rule provisions, even in the absence of an express grandfathering provision in their state rules, if the particular state's laws and regulations may be interpreted to provide such discretion. *See* 78 FR 3086 at 3258.

Because state SIPs cannot be less stringent than federal requirements, the states' discretion must be limited to applying grandfathering consistent with the federal rule provisions for O_3. However, we believe that such consistent application affords states with ample flexibility for implementing the provision. Accordingly, a state may elect to apply both milestones or it may elect to rely solely upon one of the milestones for grandfathering PSD permits for O_3. For example, in states that do not issue a formal completeness determination, the complete application milestone would not serve any practical purpose for grandfathering a PSD source, so the state may choose not to use this milestone. These states may elect to rely solely upon the public notice milestone, regardless of whether it issues formal completeness determinations. However, the EPA anticipates that once a decision is made concerning either the use of both milestones or only one, states will apply the provision consistently to all PSD permit applications that would qualify under the elected milestone(s).

The EPA seeks comments on all aspects of the proposed grandfathering provisions under either 40 CFR 52.21 or 51.166 as they would apply to exempt certain pending PSD permit applications from having to address the revised O_3 NAAQS.

b. PSD Screening Tools

The EPA has historically allowed the use of screening tools to help facilitate the implementation of the NSR program by reducing the source's burden and streamlining the permitting process for circumstances where pollutant emissions or ambient impacts could be considered de minimis. For example, the EPA has established significant emission rates or SERs that are used to determine when the NSR requirements should be applied to a particular new or modified source with regard to each regulated NSR pollutant. *See* 40 CFR 51.166(b)(23) and 52.21(b)(23). For O_3, the EPA established a separate SER in these regulations of 40 tpy for emissions of each O_3 precursor--VOC and NO_X. For PSD, these SER values for VOC and NO_X are used to determine when the proposed major source or major modification must complete PSD review for that precursor, including complying with BACT for that precursor and completing the appropriate air quality analyses associated with the proposed emissions increase of that precursor.

Another key screening tool commonly used for PSD is the significant impact level (SIL). This particular tool is used to determine the extent to which an ambient impact analysis must be completed for the applicable pollutant. The EPA has not established a SIL for O_3. The PSD regulations currently state that "[n]o *de minimis* air quality level is provided for ozone. However, any net emissions increase of 100 tons per year or more of [VOC] or [NO_X] subject to PSD would be required to perform an ambient impact analysis, including the gathering of ambient air

quality data." [262] The EPA intends to consider whether it is appropriate to make any revisions to the PSD regulations related to the screening tools for O_3 in a separate rulemaking that will specifically address various implementation issues for O_3. However, there are no such revisions being proposed in today's rulemaking. Until any rulemaking to amend existing regulations is completed, permitting decisions should continue to be based on the existing 40 TPY SER for O_3 precursors (NO_X and VOC) in existing regulations. Further decisions regarding the need for an analysis to assess the impact of an individual source on the O_3 NAAQS and the method of analysis depend on the nature of the source and its emissions, and, as noted above, should be determined in consultation with the EPA Regional Office on a case-by-case basis in accordance with section 5.2.1.c. of Appendix W to 40 CFR part 51.

c. Other PSD Transition Issues

As explained earlier in this section, the EPA anticipates that the existing O_3 air quality in some areas will no longer be in attainment of the primary O_3 standard when it is revised, and that these areas will be designated as "nonattainment" at a later date consistent with the designation process set forth for O_3 under the CAA. However, until such nonattainment designation occurs, proposed new major sources or major modifications located in any area designated attainment or

[262] This language is contained in a footnote in the PSD regulations at 40 CFR 51.166(i)(5)(i) and 52.21(i)(5)(i), and it has not been revisited by the EPA since the issuance of the 8-hour O_3 NAAQS. These values do not reflect a categorical conclusion by the EPA that sources emitting less than 100 tpy of VOCs or NO_X will not cause or contribute to a violation of the current (or any revised) O_3 NAAQS, nor does it reflect a conclusion that such sources should be categorically excluded from the requirement for an ambient impact analysis. Instead, the EPA recommends consultation with the appropriate EPA Regional Office in accordance with section 5.2.1.c of Appendix W when a review of an application for a new source or modification involves emissions less than 100 tpy of either O_3 precursor. *See* Letter from Gina McCarthy, Assistant Administrator, to Robert Ukeiley, at 4 (Jan. 4, 2012), available at http://www.epa.gov/scram001/10thmodconf/review_material/Sierra _Club_Petition_OAR-11-002-1093.pdf.

unclassifiable for the 2008 O_3 NAAQS will continue to be required to obtain a PSD permit.[263] This raises the question as to how a source can be issued a PSD permit in light of known existing ambient violations of the revised NAAQS.

Section 165(a)(3)(B) of the CAA requires that a proposed source may not construct unless it demonstrates that it will not cause or contribute to a violation of any NAAQS. This statutory requirement is implemented through a provision contained in the PSD regulations at 40 CFR 51.166(k) and 52.21(k). If a source cannot make this demonstration or if its initial air quality impact analysis shows that the source's impact does cause or contribute to a violation, a PSD permit may not be issued until that adverse impact is mitigated.[264] The PSD regulations, however, do not explicitly specify remedial actions that a prospective source can take to address such a situation. Nevertheless, the EPA has historically recognized in regulations and through other actions that sources applying for PSD permits may utilize offsets as part of the required PSD demonstration under the CAA section 165(a)(3)(B), even though the PSD provisions of the Act do not expressly reference offsets, in contrast to the NNSR provisions of the Act.[265]

The EPA has looked to the procedures contained in a separate set of regulations at 40 CFR 51.165(b) to guide the process by which a source that is located in an area designated as

---

[263] Any proposed major stationary source or major modification for O_3 that does not receive its PSD permit by the effective date of a new nonattainment designation for the area where the source would locate would then be required to satisfy all of the applicable NNSR preconstruction permit requirements for O_3.

[264] See, *e.g.*, Stephen D. Page, Director, Office of Air Quality Planning and Standards, to Regional Air Division Directors, "Guidance Concerning Implementation of the 1-hour SO_2 NAAQS for the Prevention of Significant Deterioration Program," (August 23, 2010); 44 FR 3278 (January 16, 1979).

[265] See, *e.g., In re Interpower of New York, Inc*., 5 E.A.D. 130, 141 (EAB 1994) (describing an EPA Region 2 PSD permit that relied in part on offsets to demonstrate the source would not cause or contribute to a violation of the NAAQS). 52 FR 24698 (July 1, 1987); 78 FR 3261-62 (Jan. 15, 2013).

attainment or unclassifiable for a NAAQS, but that is determined to cause or contribute to a violation of that NAAQS in any area, can use offsets to mitigate its adverse impact on the NAAQS and ultimately meet the PSD demonstration requirement under CAA section 165(a)(3)(B) and the implementing regulations.[266]

Section 51.165(b) states that plans shall include a preconstruction review permit program (or its equivalent) to satisfy the requirements of CAA section 110(a)(2)(D)(i) for major sources and major modifications, and that the program shall apply to any major stationary source or major modification locating in an area designated attainment or unclassifiable for any NAAQS, when that source would cause or contribute to a NAAQS violation.[267] Paragraph (b)(3) of that regulation provides that the required permit program may include a provision allowing a proposed major source or major modification to reduce the impact of its emissions on air quality by obtaining sufficient emissions reductions to, at a minimum, compensate for its adverse ambient impact where the source or modification would otherwise cause or contribute to a violation of any NAAQS. Although section 51.165(b) refers explicitly to CAA section 110(a)(2)(D)(i), which now addresses transport issues, but not CAA section 165(a)(3)(B), the

[266] 78 FR 3261 (January 15, 2013); Stephen D. Page, Director, Office of Air Quality Planning and Standards, to Regional Air Division Directors, "Guidance Concerning Implementation of the 1-hour SO_2 NAAQS for the Prevention of Significant Deterioration Program," (August 23, 2010).

[267] The definition of "major stationary source" and "major modification" in this regulation is based on the respective definitions in the NNSR regulations at 40 CFR 51.165(a), which are more inclusive than the respective PSD definitions, but clearly include major sources covered by the PSD requirements.

EPA has previously explained that 51.165(b) may also be interpreted to apply to the section 165(a)(3)(B) demonstration based on the regulatory history (78 FR 3262, n. 256).[268]

Generally, the offset needed to compensate for a proposed source's adverse impact would be determined by the ability of any particular emissions reduction to mitigate the source's adverse impact at the location of the violation. As long as the emissions reduction or offset can be shown to compensate for the source's adverse impact, there is no implied requirement that the amount of the emissions reduction be equal to or greater than the proposed emissions increase. *See* 44 FR 3278 (January 16, 1979). ("Although full emissions offsets are not required, such a source must obtain emissions offsets sufficient to compensate for it air quality impact where the violation occurs.")

In previous discussions of the use of emissions offsets to help make the demonstration required under CAA section 165(a)(3)(B), the EPA has explained that any emissions used for PSD purposes must meet applicability criteria that are at least as stringent as the offset criteria set forth in the NNSR requirements for offsets under 40 CFR 51.165(a)(3). *See* 78 FR 3262. The

[268] Briefly, in 1980, the EPA had determined that the statutory requirements under CAA section 165(a)(3)(B), taken together with the requirements of CAA section 110(a)(2)(D) required all major sources locating outside a nonattainment area, but causing or contributing to a NAAQS violation to reduce the impact on air quality so as to assure attainment and maintenance of the NAAQS. 45 FR 31310 (May 13, 1980). In a footnote, the EPA further indicated that this offset requirement must apply to sources causing or contributing to a newly discovered NAAQS violation until the area is designated nonattainment. *See* 45 FR 31310 (May 13, 1980). In the 1980 rule, the EPA adopted section 51.18(k), which was later renumbered section 51.165(b). The EPA revised 51.165(b) to expressly authorize an offset program to meet the requirements of CAA section 110(a)(2)(D)(i), but this provision may also be interpreted to apply to section 165(a)(3)(B), consistent with the EPA's reading of section 51.18(k) in 1980. It is also worth noting that at the time of these rules, before the 1990 CAA amendments, section 110(a)(2)(D) required each state to have "a permit or equivalent program for any major emitting facility…to assure (i) that national air quality standards are achieved and maintained…."

EPA continues to believe that these criteria provide the most appropriate criteria for determining the creditability of PSD offsets.

d. PSD for a Distinct Secondary Standard, if One is Established

As noted above, the CAA requires that proposed new major stationary sources and major modifications demonstrate that their emissions increases will not cause or contribute to a violation of any NAAQS, which includes the primary and secondary NAAQS. For O_3, the existing primary and secondary NAAQS are defined in the same form and at the same level. As described earlier in this preamble, the Administrator is proposing to retain the current averaging time and form and revise the level of the current secondary standard to within the range of 70 to 65 ppb. In addition, among other things, the agency is seeking comment on the alternative approach of revising the secondary standard to establish a distinct O_3 secondary standard. If the agency were to finalize a secondary standard that differs from the primary standard, PSD permit applicants would be required to provide an analysis that specifically addresses the revised secondary standard and make the necessary showing of compliance with that standard, as well as any revised primary standard. Moreover, if such a secondary standard is expressed in a distinctly different form than the primary standard, the required analysis for making the compliance demonstration would need to be consistent with that form.

Should the Administrator decide to establish a distinct secondary NAAQS for O_3, the EPA would consider whether the approaches put forth in any regulatory updates to Appendix W and associated guidance, as noted in this preamble above, are sufficient for making the necessary compliance demonstration for that standard for purposes of PSD. If appropriate, the EPA may consider establishing a surrogacy policy that would allow a source to make the PSD-required demonstration of compliance with a distinct secondary O_3 NAAQS solely through a

demonstration of compliance with the primary NAAQS. Therefore, the EPA expects that projects subject to the revised O_3 NAAQS could generally move forward consistent with the PSD program requirements and NNSR program requirements as subject to the revised primary and secondary O_3 NAAQS. The EPA seeks comment on this potential approach as well as any other options that should be considered for showing compliance with any revised primary and secondary O_3 NAAQS.

2. Nonattainment New Source Review

Part D of title I of the CAA includes preconstruction review and permitting requirements for new major stationary sources and major modifications when they locate in areas designated nonattainment for a particular pollutant. As explained in section VII.D.1 of this preamble, the relevant part D requirements are typically referred to as the NNSR program. The EPA's regulations for the NNSR programs are contained in 40 CFR 51.165, 52.24 and Part 51, Appendix S. For example, the EPA has developed minimum program requirements for an NNSR program that is approvable in a SIP, and those requirements, which include requirements for O_3, are contained in 40 CFR 51.165. In addition, 40 CFR part 51, Appendix S contains requirements constituting an interim NNSR program. This program governs NNSR permitting in nonattainment areas that lack a SIP-approved NNSR permitting program, and applies during the time between the date of the relevant designation and the date that the EPA approves into the SIP a NNSR program.[269] This program is commonly known as the Emissions Offset Interpretative Rule, and is applicable to O_3 as well. [270]

[269] *See* Appendix S, Part I; 40 CFR 52.24(k).
[270] As appropriate, certain NNSR requirements under 40 CFR 51.165 or Appendix S can also apply to sources and modifications located in areas that are designated attainment or unclassifiable in the Ozone Transport Region. *See, e.g.,* CAA 184(b)(2), 40 C.F.R. 52.24(k).

As with PSD, the NNSR requirements apply on a pollutant-specific basis. However, in nonattainment areas, NNSR applies only to nonattainment pollutants, that is, pollutants for which an area is designated nonattainment on the date when the permit is issued. As explained in section VII.D.1 of this preamble, prior to the designation of areas for any revised O_3 NAAQS, applicability of either PSD or NNSR for O_3 to a proposed major new or modified source will depend on an area's current designations with regard to the O_3 NAAQS. Accordingly, a major stationary source or major modification proposing to locate in an area currently designated nonattainment for the 2008 O_3 NAAQS must satisfy the NNSR permit requirements for O_3. The EPA is not proposing any new or revised NNSR requirements in this proposal. As explained in section VII.A.2 of this preamble, the CAA requires that area designations for new or revised NAAQS be addressed subsequent to the effective date of such new or revised NAAQS. The EPA anticipates that the area designation process for any revised O_3 NAAQS will be completed within 2 years after the revised NAAQS become effective. Accordingly, any revisions to the existing NNSR requirements for O_3 will be proposed at a later date consistent with the designation process for any revised O_3 NAAQS. The EPA will also at the same time propose any necessary revisions to the NNSR requirements under Appendix S so that states will be able to issue NNSR permits for the revised O_3 NAAQS on and after the effective date of designations of new nonattainment areas for O_3 until such time that their own NNSR program is approved as part of their SIP, where the state does not already have an approved NNSR program applicable to O_3.

This section provides an explanation of some of the key requirements of the NNSR program as it currently applies to O_3. For NNSR, "major stationary source" is generally defined as a source with the potential to emit at least 100 tpy of the pollutant for which the area is designated nonattainment. In some cases, however, the CAA and the NNSR regulations define

"major stationary source" for NNSR in terms of a lower rate dependent on the pollutant. For O_3, in addition to the general threshold level of 100 tpy, lower major source thresholds have been defined for O_3 nonattainment areas based on the stringency of the area's classification. The NNSR program requires the review and control of emissions of both VOC and NOx as precursors of O_3, and both are reviewed separately in accordance with the applicable major source threshold. For example, the threshold for O_3 nonattainment areas classified as Serious is 50 tpy for both VOC and NOx. *See* 40 CFR 51.165(a)(1)(iv)(A)(*1*)(*i*) and (a)(1)(iv)(A)(*2*)(*iv*), respectively.

As explained earlier in section VII.D.1 of this preamble, a major modification is a physical change or change in the method of operation of an existing major stationary source that results in both a significant emissions increase, and a significant net emissions increase. To determine whether an emissions increase is significant, the NNSR rules define significant emissions rates or SERs for each applicable pollutant. The SER for VOC is 40 tpy, as is the SER for NOx. *See* 40 CFR 51.165(a)(1)(x)(A). It should be noted that there are additional more stringent criteria that must be considered in determining a major modification in nonattainment areas classified as Serious, Severe or Extreme for O_3. *See* 40 CFR 51.165(a)(1)(x)(B), (C) and (E).

New major stationary sources and major modifications for O_3 must comply with the LAER as defined in the CAA and NNSR rules, as well as performing other analyses as required under section 173 of the CAA. In addition, appropriate emissions reductions, known as emissions offsets, must be secured to offset the proposed emissions increase of the precursors that trigger NNSR for O_3. The appropriate emissions offset needed for a particular source will depend upon the classification for the O_3 nonattainment area in which the source or modification

will locate. Generally, the ratio of the total emissions reduction to the emissions increase is at least 1:1; however, more stringent ratios apply to O_3 nonattainment areas according to the area classification. *See, e.g.,* 40 CFR 51.165(a)(9) and 40 CFR part 51, Appendix S, IV.G.2.

E. Transportation and General Conformity Programs

1. What are Transportation and General Conformity?

Conformity is required under CAA section 176(c) to ensure that federal actions are consistent with ("conform to") the purpose of the SIP. Conformity to the purpose of the SIP means that federal activities will not cause new air quality violations, worsen existing violations, or delay timely attainment of the relevant NAAQS or interim reductions and milestones. Conformity applies to areas that are designated nonattainment, and those nonattainment areas redesignated to attainment with a CAA section 175A maintenance plan after 1990 ("maintenance areas").

The EPA's Transportation Conformity Rule (40 CFR 51.390 and Part 93, subpart A) establishes the criteria and procedures for determining whether transportation activities conform to the SIP. These activities include adopting, funding or approving transportation plans, transportation improvement programs (TIPs) and federally supported highway and transit projects. For further information on conformity rulemakings, policy guidance and outreach materials, *see* the EPA's Website at *http://www.epa.gov/otaq/stateresources/transconf/index.htm*. The EPA may issue future transportation conformity guidance as needed to implement a revised O_3 NAAQS.

With regard to general conformity, the EPA first promulgated general conformity regulations in November 1993. (40 CFR part 51, subpart W, 40 CFR part 93, subpart B) Subsequently the EPA finalized revisions to the general conformity regulations on April 5, 2010.

(75 FR 17254-17279). Besides ensuring that federal actions not covered by the transportation conformity rule will not interfere with the SIP, the general conformity program also fosters communications between federal agencies and state/local air quality agencies, provides for public notification of and access to federal agency conformity determinations and allows for air quality review of individual federal actions. More information on the general conformity program is available at *http://www.epa.gov/air/genconform/*.

2. Why Is the EPA Discussing Transportation and General Conformity in this Proposed Rulemaking?

The EPA is discussing transportation and general conformity in this proposed O_3 NAAQS rulemaking in order to provide affected parties with information on when and how conformity must be implemented after nonattainment areas are designated for a revised O_3 NAAQS. The information presented here is consistent with existing conformity regulations and statutory provisions that are not addressed by this O_3 NAAQS rulemaking. Affected parties would include state and local transportation and air quality agencies, metropolitan planning organizations (MPOs), and federal agencies including the U.S. Department of Transportation (DOT), the U.S. Department of Defense, the U.S. Department of Interior, and the U.S. Department of Agriculture.

3. When Would Transportation and General Conformity Apply to Areas Designated Nonattainment for a Revised O_3 NAAQS, if One is Established?

Transportation and general conformity apply one year after the effective date of nonattainment designations for a revised O_3 NAAQS. This is because CAA section 176(c)(6) provides a 1-year grace period from the effective date of initial designations for any revised NAAQS before transportation and general conformity apply in areas newly designated nonattainment for a specific pollutant and NAAQS.

4. Will Transportation and General Conformity Apply to a Distinct Secondary O_3 NAAQS, if One is Established?

Section 176(c)(1)(A) of the CAA states that conformity to a SIP means "conformity to an implementation plan's purpose of eliminating or reducing the severity and number of violations of the national ambient air quality standards and achieving expeditious attainment of such standards..." In other words, because the CAA refers to the NAAQS without distinguishing between them, conformity applies to both the primary and secondary NAAQS for all criteria pollutants. Therefore, if a distinct secondary O_3 NAAQS is established, both transportation and general conformity will apply in any areas designated nonattainment for such a NAAQS.

Current transportation and general conformity regulations already apply to such a secondary NAAQS, and nothing in this proposal affects those transportation and general conformity requirements. The EPA will consider the need to issue additional guidance concerning the implementation of transportation and general conformity in areas designated nonattainment for a distinct secondary O_3 NAAQS, if one is established.

5. What Impact Would the Implementation of a Revised O_3 NAAQS Have on a State's Transportation and/or General Conformity SIP?

If the EPA revises the O_3 NAAQS, but does not make specific changes to its transportation or general conformity regulations, then states should not need to revise their transportation and/or general conformity SIPs. The EPA is not proposing any changes to its transportation or general conformity regulations. While we are not proposing any revisions to the general conformity regulations at this time, we recommend, when areas develop SIPs for a revised O_3 NAAQS, that state and local air quality agencies work with federal agencies with large facilities that are subject to the general conformity regulations to establish an emissions

budget for those facilities in order to facilitate future conformity determinations under the conformity regulations. Such a budget could be used by federal agencies in determining conformity or identifying mitigation measures if the budget level is included and identified in the SIP. However, because some federal agencies may not have an established facility-wide emissions budget in the SIP for the purpose of meeting general conformity requirements, state, local and tribal agencies are encouraged to maintain ozone SIP emissions inventories on an annual basis, at a minimum, to facilitate compliance of federal agencies with CAA section 176(c). Finally, states with new nonattainment areas may also need to revise conformity SIPs in order to ensure the state regulations apply in any newly designated areas if the existing SIP does include current conformity provisions.

If this is the first time that transportation conformity will apply in a state, such a state is required by the statute and EPA regulations to submit a SIP revision that addresses three specific transportation conformity requirements that address consultation procedures and written commitments to control or mitigation measures associated with conformity determinations for transportation plans, TIPs or projects. (40 CFR 51.390) Additional information and guidance can be found in the EPA's "Guidance for Developing Transportation Conformity State Implementation Plans" (http://www.epa.gov/otaq/stateresources/transconf/policy/420b09001.pdf).

F. How Background O_3 Is Addressed in CAA Implementation Provisions

1. Introduction

The EPA and state, local and tribal air agencies, need to determine how to most effectively and efficiently use the CAA's various provisions to provide required public health and welfare protection from the harmful effects of O_3. In most cases, reducing man-made

emissions of NO_X and VOCs will reduce O_3 formation and provide additional health and welfare protection. The EPA recognizes, however, that "background" O_3 levels, which can be significant in some areas on some days, may present a challenge to air agencies in preparing clean air plans. That is, O_3 and O_3-forming pollution from natural and international sources could prevent ambient levels from reaching attainment levels in locations where the impacts of such sources are large relative to the impact of controllable man-made sources of NO_X and VOC emissions within the U.S., especially in locations with few remaining untapped opportunities for local emission reductions.

Climate change may also influence future O_3 concentrations. Modeling studies in EPA's Interim Assessment (U.S. EPA, 2009b) and cited in support of the 2009 Endangerment Finding (74 FR 66,496; Dec. 15, 2009) show that, while the impact is not uniform, simulated climate change causes increases in summertime O_3 concentrations over substantial regions of the country, with increases tending to occur during higher peak pollution episodes in the summer. Increases in temperature are expected to be the principal factor in driving any O_3 increases, although increases in stagnation frequency may also contribute (Jacob and Winner, 2009). These temperature increases could lead to more prevalent wildfires, the impacts of which may lessened by various mitigation measures including taking steps to minimize fuel loading in areas vulnerable to fire.

The term "background" O_3 is often used to refer to O_3 that originates from natural sources of O_3 (e.g., wildfires and stratospheric O_3 intrusions) and O_3 precursors, as well as from manmade international emissions of O_3 precursors. Using the term generically, however, can lead to confusion as to what sources of O_3 are being considered. The PA provides three specific definitions of background O_3: natural background, North American background, and United

States background. Natural background (NB) is defined as the O_3 that would exist in the absence of any manmade O_3 precursor emissions. North American background (NAB) is defined as that O_3 that would exist in the absence of any manmade O_3 precursor emissions from North America. U.S. background (USB) is defined as that O_3 that would exist in the absence of any manmade emissions inside the U.S. Because background O_3 is difficult to measure, air quality modeling is conducted to estimate NA, NAB, and USB.

The PA identifies several key findings related to background O_3. First, background O_3 can comprise a considerable fraction of total seasonal mean O_3 across the U.S. Studies have estimated that seasonal mean USB 8-hour O_3 values across U.S. locations varied between 25 to 50 ppb in 2007 (U.S. EPA, 2014c, Figure 211). The largest seasonal average values of background are modeled to occur at locations in the intermountain western U.S. and the highest daily USB levels are highest in the spring and early summer seasons. Second, the modeling indicates that U.S. anthropogenic emission sources are the dominant contributor to the majority of modeled O_3 exceedances of the NAAQS across the U.S. This conclusion is based on results that indicate background contributions are generally similar on high O_3 days as on all other O_3 days. As a result, the proportional influence of background sources tends to be lower on high O_3 days. Third, while the majority of modeled O_3 exceedances have local and regional emissions as their primary cause, there can be events where O_3 levels approach or exceed the concentration levels being proposed in this notice (i.e., 60-70 ppb) in large part due to background sources. These cases of high USB levels on high O_3 days typically result from stratospheric intrusions of O_3, wildfire O_3 plumes, or long-range transport of O_3 from sources outside the U.S. In most locations in the U.S., these events are relatively infrequent and the CAA contains provisions that

can be used to help deal with certain events, including providing varying degrees of regulatory relief for air agencies and potential regulated entities.

Regulatory relief associated with U.S. background O_3 may include: [271]

- Relief from designation as a nonattainment area (through exclusion of data affected by exceptional events)
- Relief from the more stringent requirements of higher nonattainment area classifications (through treatment as a rural transport area; through exclusion of data affected by exceptional events; or through international transport provisions)
- Relief from adopting more than reasonable controls to demonstrate attainment (through international transport provisions)

None of these relief mechanisms are completely burden-free, meaning they all require some level of assessment or demonstration by a state and/or EPA to legally invoke. In no case does the CAA authorize a blanket exclusion from the basic application of an air quality management regime because an area is significantly impacted by background O_3. While any prediction of the exact nature of future implementation challenges associated with alternative prospective standards is inherently uncertain, there is no question that, as the levels of alternative prospective standards are lowered, background will represent increasingly larger fractions of total O_3 levels and may subsequently complicate efforts to attain these standards. For a prospective standard of 70 ppb, the EPA does not believe that background O_3 would create significant implementation-related challenges at locations throughout the U.S. and prevent

[271] Note that the relief mechanisms discussed here do not include the CAA's interstate transport provisions found in sections 110(a)(2)(D) and 126. The interstate transport provisions are intended to address the cross-state transport of O_3 and O_3 precursor emissions from man-made sources within the continental U.S. rather than background O_3 as it is defined in this section.

attainment of the NAAQS. However, as the levels of prospective standards are lowered, the areas that would most likely need to use the relief mechanisms discussed in this section as part of attaining the lower prospective levels are rural locations in the western U.S., consistent with the previously mentioned locations where we have estimated the largest seasonal average values of background occur. The remainder of this section discusses these relief mechanisms and the methods associated with legally invoking them. These relief mechanisms depend on distinguishing background O_3 by the following types of drivers: routine natural emissions, non-routine natural events and international emissions. The EPA welcomes comment on any of these issues related to O_3 background and implementation.

2. Exceptional Events Exclusions

A state can request and the EPA can agree to exclude data associated with event-influenced exceedances or violations of a NAAQS, including the proposed O_3 NAAQS, provided the event meets the statutory requirements in section 319 of the CAA:

- The event "affects air quality."
- The event "is not reasonably controllable or preventable."
- The event is "caused by human activity that is unlikely to recur at a particular location or [is] a natural event."[272]

The EPA's implementing regulations, the 2007 Exceptional Events Rule, further specify that states must provide evidence that: [273]

[272] A natural event is further described in 40 CFR 50.1(k) as "an event in which human activity plays little or no direct causal role."
[273] Federal Register (2007). Treatment of Data Influenced by Exceptional Events; Final Rule. 40 CFR 50 and 51; Federal Register 72:13560.

- "There is a clear causal relationship between the measurement under consideration and the event that is claimed to have affected the air quality in the area;"
- "The event is associated with a measured concentration in excess of normal historical fluctuations, including background;" and
- "There would have been no exceedance or violation but for the event."

The ISA contains discussions of natural events that may contribute to O_3 or O_3 precursors. These include stratospheric O_3 intrusion and wildfire events.[274] As indicated above, to satisfy the exceptional event requirements and to qualify for data exclusion under the Exceptional Events Rule, a state must develop and submit evidence addressing each of the identified criteria. The extent to which a stratospheric O_3 intrusion event or a wildfire event contribute to O_3 levels can be uncertain, and in most cases requires detailed investigation and analysis to adequately determine.

Strong stratospheric O_3 intrusion events, most prevalent at high elevation sites during winter or spring, can be identified based on measurements of low relative humidity, evidence of deep atmospheric mixing, and a low ratio of CO to O_3 based on ambient measurements. Accurately determining the extent of weaker intrusion events remains challenging (U.S. EPA 2013a, p.3-34). Although states have submitted only a few exceptional event demonstrations for

[274] The preamble to the Exceptional Events Rule (72 FR 13560, March 22, 2007) identifies both stratospheric O_3 intrusions and wildfires as natural events that could also qualify as exceptional events under the CAA and Exceptional Event Rule criteria. Note that O_3 resulting from routine natural emissions from vegetation, microbes, animals and lightning are not exceptional events authorized for exclusion under the section 319 of the CAA.

stratospheric O_3 intrusion, the EPA recently approved a demonstration from Wyoming for a June 2012 stratospheric O_3 event.[275]

While stratospheric O_3 intrusions can increase monitored ground-level ambient O_3 concentrations, wildfire plumes can either suppress or enhance O_3 depending upon a variety of factors including fuel type, combustion stage, plume chemistry, aerosol effects, meteorological conditions and distance from the fire (Jaffe and Wigder, 2012). As such, determining the impact of wildfire emissions on specific O_3 observations is challenging. The EPA recently approved an exceptional event demonstration for wildfires affecting 1-hour O_3 levels in Sacramento, California in 2008 that successfully used a variety of analytical tools (e.g., regression modeling, back trajectories, satellite imagery, etc.) to support the exclusion of O_3 data affected by large fires.[276]

Because of previously expressed stakeholder feedback regarding implementation of the Exceptional Events Rule and specific stakeholder concerns regarding the analyses that can be used to support O_3-related exceptional event demonstrations, the EPA intends to propose revisions to the Exceptional Events Rule in a future notice and comment rulemaking effort and will solicit public comment at that time.

Additionally, the EPA intends to develop guidance to address implementing the Exceptional Events Rule criteria for wildfires that could affect ambient O_3 concentrations. Wildfire emissions are a component of background O_3 (Jaffe and Wigder, 2012) and can

---

[275] U.S. EPA (2014) Treatment of Data Influenced by Exceptional Events: Examples of Reviewed Exceptional Event Submissions. U.S. Environmental Protection Agency, Research Triangle Park, NC. Available at http://www.epa.gov/ttn/analysis/exevents.htm.

[276] U.S. EPA (2014) Treatment of Data Influenced by Exceptional Events: Examples of Reviewed Exceptional Event Submissions. U.S. Environmental Protection Agency, Research Triangle Park, NC. Examples of O_3-related exceptional event submissions available at http://www.epa.gov/ttn/analysis/exevents.htm.

significantly contribute to periodic high O_3 levels (Emery, 2012). Besides their effect on air quality, wildfires pose a direct threat to public safety – a threat that can be mitigated through management of wildland vegetation. Attempts to suppress wildfires have resulted in unintended consequences, including increased risks to both humans and ecosystems. Indeed, "Fire policy that focuses on [wildfire] suppression only, delays the inevitable, promising more dangerous and destructive future…fires" (Stephens, S. et al., 2013). The use of wildland prescribed fire can influence the occurrence of catastrophic wildfires which may help manage the contribution of wildfires to background O_3 levels and periodic peak O_3 events. Additionally prescribed fires can have benefits to those plant and animal species that depend upon natural fires for propagation, habitat restoration, and reproduction, as well as myriad ecosystem functions (e.g., carbon sequestration). As previously indicated, the CAA and the EPA's implementing regulations allow for the exclusion of air quality monitoring data from design value calculations when they are substantially affected by certain background influences. Additionally, the CAA requires the EPA to set the NAAQS at levels requisite to protect public health and welfare without regard to the source of the pollutant. However, EPA understands the importance of prescribed fire which mimics a natural process necessary to manage and maintain fire-adapted ecosystems and climate change adaptation, while reducing risk of uncontrolled emissions from catastrophic wildfires. The EPA is committed to working with federal land managers, tribes, and states to effectively manage prescribed fire use to reduce the impact of wildland-fire related emissions on ozone through policies and regulations implementing these standards.

3. Rural Transport Areas

Clean Air Act section 182(h) authorizes the EPA Administrator to determine that an area designated nonattainment can be treated as a rural transport area. In accordance with the statute, a nonattainment area may qualify for this determination if it meets the following criteria:

- The area does not contain emissions sources that make a significant contribution to monitored O_3 concentrations in the area, or in other areas; and
- The area does not include and is not adjacent to a Metropolitan Statistical Area.[277]

Historically, the EPA has recognized few nonattainment areas under this statutory provision.[278] The EPA has not issued separate written guidance to further elaborate on the interpretation of these CAA qualification criteria. However, the EPA developed draft guidance in 2005 that explains the kinds of technical analyses that states could use to establish that transport of O_3 and/or O_3 precursors into the area is so overwhelming that the contribution of local emissions to an observed 8-hour O_3 concentration above the level of the NAAQS is relatively minor and determine that emissions within the area do not make a significant contribution to the O_3 concentrations measured in the area or in other areas.[279] While this guidance was not prepared specifically for rural transport areas, it could be useful to states for developing technical information to support a request that the EPA treat a specific O_3 nonattainment area as a rural transport area.

---

[277] Note that the EPA interprets the rural transport provisions of section 182(h) would not apply to an O_3 monitor that is located in a relatively rural location, but is heavily influenced by short-range upwind contributions from a nearby urbanized area. The EPA will work closely with states to determine whether a particular monitor violating the NAAQS is considered to be affiliated with a nearby urban area, or is an isolated rural area monitor.

[278] For the 1979 1-hour O_3 standard, Essex County, New York, and Smyth County, Virginia (White Top Mountain) were recognized by the EPA as rural transport areas.

[279] U.S. Environmental Protection Agency (2005). Criteria For Assessing Whether an Ozone Nonattainment Area is Affected by Overwhelming Transport [Draft EPA Guidance]. U.S. Environmental Protection Agency, Research Triangle Park, NC. June 2005. Available at http://www.epa.gov/scram001/guidance/guide/owt_guidance_07-13-05.pdf.

An area that qualifies for treatment as a rural transport area is deemed to have fulfilled all O_3-related planning and control requirements if it meets the CAA's requirements for areas classified Marginal, which is the lowest classification specified in the CAA. Therefore, a state would not need to develop an attainment plan or an attainment demonstration for such an area or adopt the various mandatory measures required in nonattainment areas classified as Moderate or above. The only requirements that would apply, regardless of the level of O_3 air quality, would be NNSR (at the Marginal major source threshold and offset ratio), conformity requirements associated with a nonattainment designation, and the emission inventory and source emission statement requirements.

4. International Transport

Clean Air Act section 179B recognizes the possibility that certain nonattainment areas may be heavily impacted by O_3 or O_3 precursor emissions from international sources beyond the regulatory jurisdiction of the state. The EPA's science review suggests that the influence of international sources on U.S. O_3 levels will be largest in locations that are in the immediate vicinity of an international border with Canada or Mexico, but other locations can also potentially be affected when conditions are favorable for long-range transport (U.S. EPA 2013a, p.3-140). Section 179B allows states to consider in their attainment demonstrations whether an area might have met the O_3 NAAQS by the attainment date "but for" emissions contributing to the area originating outside the U.S. If a state is unable to demonstrate attainment in such an area after adopting all reasonably available control measures (RACM, including RACT, as required by CAA section 182(b)), the EPA can nonetheless approve the CAA-required state attainment plan and demonstration using the authority in section 179B.

When the EPA approves this type of attainment plan, states avoid potential sanctions and FIPs, and there would be no adverse consequence for a finding that the area failed to attain the NAAQS by the relevant attainment date. For example, the area would not be reclassified to the next highest classification or required to implement a section 185 penalty fee program.

Section 179B authority does not allow the EPA to avoid designating an area as nonattainment or for the area to be classified with a lower classification than is indicated by actual air quality. Generally, monitoring data influenced by international transport may not be excluded from regulatory determinations, unless the data are influenced by an excludable exceptional event. Section 179B also does not provide for any relaxation of mandatory emissions control measures (including contingency measures) or the prescribed emissions reductions necessary to achieve RFP.

The EPA's guidance on 'but for' demonstrations involving international emissions indicates that states may want to consider conducting air quality modeling using O_3 episodes that do not involve international transport of emissions (U.S. EPA 1991)[280]), running the model with boundary conditions that reflect general U.S. background concentrations, and analyzing monitoring data if a dense network has been established. Additional information that may be helpful at nonattainment areas abutting international borders could include evaluating changes in O_3 with changes in wind direction at monitors near the border, and comparing emissions on both sides of the border. States are encouraged to consult with their EPA Regional Office to establish appropriate technical requirements for these analyses.

[280] U.S. Environmental Protection Agency (1991). Criteria for Assessing the Role of Transported Ozone/Precursors in Ozone Nonattainment Areas. EPA-450/4-91-015. U.S. Environmental Protection Agency, Office of Air Quality Planning and Standards, Research Triangle Park, NC. May 1991.

The EPA has used section 179B authority previously to approve attainment plans for Mexican border areas in El Paso, TX (O_3, PM_{10}, and CO plans); Nogales, AZ (PM_{10} plan); and Imperial Valley, CA (PM_{10} plan). The 1-hour O_3 attainment plan for El Paso, TX was approved by EPA as sufficient to demonstrate attainment of the NAAQS by the Moderate classification deadline of November 15, 1996, taking into account "but for" international emissions sources in Ciudad Juárez, Mexico (69 FR 32450, June 10, 2004). The state's demonstration included airshed modeling using only the U.S. emissions data because emissions data from Ciudad Juárez were not available.

VIII. Statutory and Executive Order Reviews

Additional information about these statutes and Executive Orders can be found at http://www2.epa.gov/laws-regulations/laws-and-executive-orders.

A. Executive Order 12866: Regulatory Planning and Review and Executive Order 13563: Improving Regulation and Regulatory Review

This action is an economically significant regulatory action that was submitted to the Office of Management and Budget (OMB) for review. Any changes made in response to OMB recommendations have been documented in the docket. The EPA prepared an analysis of the potential costs and benefits associated with this action. This analysis is contained in the document, Regulatory Impact Analysis for the O_3 NAAQS, November, 2014. A copy of the analysis is available in the RIA docket (EPA-HQ-OAR-2013-0169) and the analysis is briefly summarized here. The RIA estimates the costs and monetized human health and welfare benefits of attaining four alternative O_3 NAAQS nationwide. Specifically, the RIA examines the alternatives of 60 ppb, 65 ppb, 70 ppb, and 75 ppb. The RIA contains illustrative analyses that

consider a limited number of emissions control scenarios that states and Regional Planning Organizations might implement to achieve these alternative O_3 NAAQS. However, the CAA and judicial decisions make clear that the economic and technical feasibility of attaining ambient standards are not to be considered in setting or revising NAAQS, although such factors may be considered in the development of state plans to implement the standards. Accordingly, although an RIA has been prepared, the results of the RIA have not been considered in issuing this proposed rule.

B. Paperwork Reduction Act

The information collection requirements in this proposed rule have been submitted for approval to the Office of Management and Budget (OMB) under the Paperwork Reduction Act (PRA). The Information Collection Request (ICR) document prepared by EPA has been assigned EPA ICR #2313.03. You can find a copy of the ICR in the docket for this rule, and it is briefly summarized here.

The information collected and reported under 40 CFR part 58 is needed to determine compliance with the NAAQS, to characterize air quality and associated health and ecosystems impacts, to develop emission control strategies, and to measure progress for the air pollution program. We are proposing to extend the length of the required O_3 monitoring season in 33 states and propose that the revised O_3 monitoring seasons become effective on January 1, 2017. We are also proposing revisions to the PAMS monitoring requirements that reduce the number of required PAMS sites while improving spatial coverage, and proposing to require states with O_3 non-attainment areas to develop an enhanced monitoring plan as part of the PAMS requirements. For areas currently designated as nonattainment for O_3 based on the 2008 NAAQS, we propose that these areas comply with the PAMS requirements by June 1, 2017. For new areas designated

based on a revised NAAQS, if finalized, we propose that those areas comply with the PAMS requirements by January 1, 2019. In addition, we are proposing to revise the O_3 FRM to establish a new, additional technique for measuring O_3 in the ambient air. We propose that it be incorporated into the existing O_3 FRM, using the same calibration procedure in Appendix D of 40 CFR part 50. We also propose to make changes to the procedures for testing performance characteristics and determining comparability between candidate FEMs and reference methods.

For the purposes of ICR #2313.03, the burden figures represent the burden estimate based on the requirements contained in the proposed rule. The burden estimates are for the 3-year period from 2015 through 2017. The implementation of the PAMS changes, if finalized, will occur beyond the time frame of this ICR with likely implementation dates between 2017 and 2019. The cost estimates for the PAMS network (including proposed revisions) will be captured in future routine updates to the Ambient Air Quality Surveillance ICR that are required every 3 years by OMB. The proposal for a new FRM in 40 CFR part 50 and revisions to the O_3 FEM procedures for testing performance characteristics in 40 CFR part 53 does not add any additional information collection requirements.

The ICR burden estimates are associated with the proposed changes to the O_3 seasons. This information collection is estimated to involve 158 respondents for a total cost of approximately $24,115,182 (total capital, labor, and operation and maintenance) plus a total burden of 339,930 hours for the support of all operational aspects of the entire O_3 monitoring network. The labor costs associated with these hours are $19,813,692. Also included in the total are other costs of operations and maintenance of $2,210,132 and equipment and contract costs of $2,091,358. The actual labor cost increase to expand the O_3 monitoring seasons is $1,668,433. In addition to the costs at the state, local, and tribal air quality management agencies, there is a

burden to EPA of 41,418 hours and $2,617,591. Burden is defined at 5 CFR 1320.3(b). State, local, and tribal entities are eligible for state assistance grants provided by the Federal government under the CAA which can be used for related activities. An agency may not conduct or sponsor, and a person is not required to respond to, a collection of information unless it displays a currently valid OMB control number. The OMB control numbers for EPA's regulations in 40 CFR are listed in 40 CFR part 9.

To comment on the Agency's need for this information, the accuracy of the provided burden estimates, and any suggested methods for minimizing respondent burden, EPA has established a public docket for this rule, which includes this ICR, under Docket ID number EPA-HQ-OAR-2008-0699. Submit any comments related to the ICR to EPA and OMB. Send comments to the EPA at the air and Radiation Docket and Information Center Docket in the EPA Docket Center (EPA/DC), EPA West, Room 3334, 1301 Constitution Ave. NW., Washington DC. The Docket Center Public Reading Room is open from 8:30 a.m. to 4:30 p.m., Monday through Friday, excluding legal holidays. The telephone number for the Reading Room is (202) 566-1744, and the telephone number for the Air and Radiation Docket and Information Center Docket is (202) 56-1742. An electronic version of the public docket is available at www.regulations.gov. Send comments to OMB at the Office of Information and Regulatory Affairs, Office of Management and Budget, 725 17th Street, NW, Washington, DC 20503, Attention: Desk Office for EPA. Since OMB is required to make a decision concerning the ICR between 30 and 60 days after **[INSERT DATE OF PUBLICATION IN THE FEDERAL REGISTER]**, a comment to OMB is best assured of having its full effect if OMB receives it by **[INSERT DATE 30 DAYS AFTER PUBLICATION IN THE FEDERAL REGISTER]**. The

final rule will respond to any OMB or public comments on the information collection requirements contained in this proposal.

C. Regulatory Flexibility Act

I certify that this action will not have a significant economic impact on a substantial number of small entities under the Regulatory Flexibility Act (RFA). The reason is that this proposed rule will not impose any requirements on small entities. Rather, this rule establishes national standards for allowable concentrations of O_3 in ambient air as required by section 109 of the CAA. See also *American Trucking Associations v. EPA*, 175 F. 3d at 1044-45 (NAAQS do not have significant impacts upon small entities because NAAQS themselves impose no regulations upon small entities). Similarly, the proposed revisions to 40 CFR part 58 address the requirements for states to collect information and report compliance with the NAAQS and will not impose any requirements on small entities. Similarly, the addition of a new FRM in 40 CFR part 50 and revisions to the FEM procedures for testing in 40 CFR part 53 will not impose any requirements on small entities.

D. Unfunded Mandates Reform Act

This action does not contain any unfunded mandate as described in the Unfunded Mandates Reform Act (UMRA), 2 U. S. C. 1531 – 1538, and does not significantly or uniquely affect small governments. Furthermore, as indicated previously, in setting a NAAQS the EPA cannot consider the economic or technological feasibility of attaining ambient air quality standards, although such factors may be considered to a degree in the development of state plans to implement the standards. See also *American Trucking Associations v. EPA*, 175 F. 3d at 1043 (noting that because the EPA is precluded from considering costs of implementation in establishing NAAQS, preparation of a Regulatory Impact Analysis (RIA) pursuant to the

Unfunded Mandates Reform Act would not furnish any information which the court could consider in reviewing the NAAQS).

E. Executive Order 13132: Federalism

This action does not have federalism implications. It will not have substantial direct effects on the states, on the relationship between the national government and the states, or on the distribution of power and responsibilities among the various levels of government.

F. Executive Order 13175: Consultation and Coordination with Indian Tribal Governments

This action does not have tribal implications, as specified in Executive Order 13175. It does not have a substantial direct effect on one or more Indian Tribes as tribes are not obligated to adopt or implement any NAAQS. In addition, tribes are not obligated to conduct ambient monitoring for O_3 or to adopt the ambient monitoring requirements of 40 CFR part 58. Thus, Executive Order 13175 does not apply to this rule.

The EPA specifically solicits comment on this rule from tribal officials. Prior to finalization of this proposal, the EPA intends to conduct outreach consistent with the EPA Policy on Consultation and Coordination with Indian Tribes. Outreach to tribal environmental professionals will be conducted through participation in the Tribal Air call, which is sponsored by the National Tribal Air Association. In addition, the EPA intends to offer formal consultation to the tribes during the public comment period. If consultation is requested, a summary of the result of that consultation will be presented in the notice of final rulemaking and will be available in the docket.

G. Executive Order 13045: Protection of Children from Environmental Health & Safety Risks

This action is subject to Executive Order 13045 because it is an economically significant regulatory action as defined by Executive Order 12866, and the EPA believes that the

environmental health risk addressed by this action may have a disproportionate effect on children. The rule will establish uniform national ambient air quality standards for O_3; these standards are designed to protect public health with an adequate margin of safety, as required by CAA section 109. However, the protection offered by these standards may be especially important for children because children, especially children with asthma, along with other at-risk populations[281] such as all people with lung disease and people active outdoors, are potentially susceptible to health effects resulting from O_3 exposure. Because children are considered an at-risk lifestage, we have carefully evaluated the environmental health effects of exposure to O_3 pollution among children. Discussions of the results of the evaluation of the scientific evidence, policy considerations, and the exposure and risk assessments pertaining to children are contained in sections II.B and II.C of this preamble.

H. Executive Order 13211: Actions that Significantly Affect Energy Supply, Distribution, or Use

This action is not a "significant energy action" because it is not likely to have a significant adverse effect on the supply, distribution, or use of energy. The purpose of this rule is to establish revised NAAQS for O_3, establish an additional FRM, revise FEM procedures for testing, and revises air quality surveillance requirements. The rule does not prescribe specific pollution control strategies by which these ambient standards and monitoring revisions will be met. Such strategies will be developed by states on a case-by-case basis, and the EPA cannot predict whether the control options selected by states will include regulations on energy suppliers, distributors, or users. Thus, the EPA concludes that this rule is not likely to have any

[281] As used here and similarly throughout this document, the term population refers to people having a quality or characteristic in common, including a specific pre-existing illness or a specific age or life stage.

adverse energy effects and does not constitute a significant energy action as defined in Executive Order 13211.

I. National Technology Transfer and Advancement Act

This rulemaking involves environmental monitoring and measurement. Consistent with the Agency's Performance Based Measurement System (PBMS), the EPA proposes not to require the use of specific, prescribed analytical methods. Rather, the Agency plans to allow the use of any method that meets the prescribed performance criteria. Ambient air concentrations of ozone are currently measured by the Federal reference method (FRM) in 40 CFR part 50, Appendix D (Measurement Principle and Calibration Procedure for the Measurement of Ozone in the Atmosphere) or by Federal equivalent methods (FEM) that meet the requirements of 40 CFR part 53. Procedures are available in part 53 that allow for the approval of an FEM for O_3 that is similar to the FRM. Any method that meets the performance criteria for a candidate equivalent method may be approved for use as an FEM. This approach is consistent with EPA's PBMS. The PBMS approach is intended to be more flexible and cost-effective for the regulated community; it is also intended to encourage innovation in analytical technology and improved data quality. The EPA is not precluding the use of any method, whether it constitutes a voluntary consensus standard or not, as long as it meets the specified performance criteria.

J. Executive Order 12898: Federal Actions to Address Environmental Justice in Minority Populations and Low-Income Populations

The EPA believes the human health or environmental risk addressed by this action will not have potential disproportionately high and adverse human health or environmental effects on minority, low-income or indigenous populations because it does not affect the level of protection provided to human health or the environment. This action proposes the strengthening of the O_3

NAAQS. If the proposed revisions are finalized, the revised O_3 NAAQS will increase public health protection. Analyses evaluating the potential implications of a revised O_3 NAAQS for environmental justice populations are discussed in appendix 9A of the Regulatory Impact Analysis (RIA) that accompanies this notice of proposed rulemaking. The RIA is available on the Web, through the EPA's Technology Transfer Network website at http://www.epa.gov/ttn/naaqs/standards/ozone/s_o3_index.html.

References

Abt Associates, Inc. (1995). Ozone NAAQS benefits analysis: California crops. Report to U.S. EPA, July.

Adams, W. C. (2006). Comparison of chamber 6.6 hour exposures to 0.04-0.08 ppm ozone via square-wave and triangular profiles on pulmonary responses. Inhalation Toxicol. 18: 127-136. http://dx.doi.org/10.1080/08958370500306107.

Adams, WC. (2003). Comparison of chamber and face mask 6.6-hour exposure to 0.08 ppm ozone via square-wave and triangular profiles on pulmonary responses. Inhal Toxicol 15: 265-281.

Adams, WC. (2002). Comparison of chamber and face-mask 6.6-hour exposures to ozone on pulmonary function and symptoms responses. Inhal Toxicol 14: 745-764. http://dx.doi.org/10.1080/08958370290084610.

Adams, P. F.; Hendershot, G. E.; Marano, M. A. (1999). Current estimates from the National Health Interview Survey, 1996. Hyattsville, MD: U.S. Department of Health and Human Services, Public Health Service, National Center for Health Statistics; DHHS publication no. (PHS) 99-1528. (Vital and health statistics: v. 10, data from the National Health Survey, no. 200). Available: http://www.cdc.gov/nchs/products/pubs/pubd/series/sr10/pre-200/pre-200.htm [12 March, 2001].

Adamson, I; Prieditis, H. (1995). Response of mouse lung to carbon deposition during injury and repair. Environmental Health Perspectives. 103: 1: 72-76.

Akbari, H. (2002). Shade trees reduce building energy use and CO_2 emissions from power plants. Environmental Pollution 116 (2002) S119–S126

Alexeeff, SE; Litonjua, AA; Suh, H; Sparrow, D; Vokonas, PS; Schwartz, J. (2007). Ozone exposure and lung function: Effect modified by obesity and airways hyperresponsiveness in the VA Normative Aging Study. Chest 132: 1890-1897. http://dx.doi.org/10.1378/chest.07-1126

Alexis, NE; Lay, JC; Hazucha, M; Harris, B; Hernandez, ML; Bromberg, PA; Kehrl, H; Diaz-Sanchez, D; Kim, C; Devlin, RB; Peden, DB. (2010). Low-level ozone exposure induces airways inflammation and modifies cell surface phenotypes in healthy humans. Inhal Toxicol 22: 593-600.

Alexis, N; Urch, B; Tarlo, S; Corey, P; Pengelly, D; O'Byrne, P; Silverman, F. (2000). Cyclooxygenase metabolites play a different role in ozone-induced pulmonary function decline in asthmatics compared to normals. Inhal Toxicol 12: 1205-1224.

Andersen, CP; Wilson, R; Plocher, M; Hogsett, WE. (1997). Carry-over effects of ozone on root growth and carbohydrate concentrations of ponderosa pine seedlings. Tree Physiol 17: 805-811.

ATS (American Thoracic Society). (2000). What constitutes an adverse health effect of air pollution? Am. J. Respir. Crit. Care Med. 161: 665-673.

ATS (American Thoracic Society). (1991). Lung function testing: selection of reference values and interpretive strategies. Am. Rev. Respir. Dis. 144: 1202-1218.

ATS (American Thoracic Society). (1985). Guidelines as to what constitutes an adverse respiratory health effect, with special reference to epidemiological studies of air pollution. Am. Rev. Respir. Dis. 131: 666-668.

Avol, EL; Trim, SC; Little, DE; Spier, CE; Smith, MN; Peng, RC; Linn, WS; Hackney, JD; Gross, KB; D'Arcy, JB; Gibbons, D; Higgins, ITT. (1990). Ozone exposure and lung function in children attending a southern California summer camp. In Proceedings of the 83rd A&WMA Annual Meeting. Pittsburgh, PA: Air & Waste Management Association.

Balmes, JR; Chen, LL; Scannell, C; Tager, I; Christian, D; Hearne, PQ; Kelly, T; Aris, RM. (1996). Ozoneinduced decrements in FEV1 and FVC do not correlate with measures of inflammation. Am J Respir Crit Care Med 153: 904-909.

Barraza-Villarreal, A; Sunyer, J; Hernandez-Cadena, L; Escamilla-Nunez, MC; Sienra-Monge, JJ; Ramirez-Aguilar, M; Cortez-Lugo, M; Holguin, F; Diaz-Sanchez, D; Olin, AC; Romieu, I. (2008). Air pollution, airway inflammation, and lung function in a cohort study of Mexico City schoolchildren. Environ Health Perspect 116: 832-838. http://dx.doi.org/10.1289/ehp.10926.

Basha, MA; Gross, KB; Gwizdala, CJ; Haidar, AH; Popovich, J, Jr. (1994). Bronchoalveolar lavage neutrophilia in asthmatic and healthy volunteers after controlled exposure to ozone and filtered purified air. Chest 106: 1757-1765.

Bell, ML; Peng, RD; Dominici, F. (2006). The exposure-response curve for ozone and risk of mortality and the adequacy of current ozone regulations. Environ Health Perspect 114: 532-536.

Berhane, K; Zhang, Y; Linn, WS; Rappaport, EB; Bastain, TM; Salam, MT; Islam, T; Lurmann, F; Gilliland, FD. (2011). The effect of ambient air pollution on exhaled nitric oxide in the

Children's Health Study. Eur Respir J 37: 1029-1036. http://dx.doi.org/10.1183/09031936.00081410.

Berry, M; Lioy, PJ; Gelperin, K; Buckler, G; Klotz, J. (1991). Accumulated exposure to ozone and measurement of health effects in children and counselors at two summer camps. Environ Res 54: 135-150.

Betzelberger, AM; Gillespie, KM; McGrath, JM; Koester, RP; Nelson, RL; Ainsworth, EA. (2010). Effects of chronic elevated ozone concentration on antioxidant capacity, photosynthesis and seed yield of 10 soybean cultivars. Plant Cell Environ 33: 1569-1581. http://dx.doi.org/10.1111/j.1365-3040.2010.02165.x.

Blomberg, A; Mudway, IS; Nordenhall, C; Hedenstrom, H; Kelly, FJ; Frew, AJ; Holgate, ST; Sandstrom, T. (1999). Ozone-induced lung function decrements do not correlate with early airway inflammatory or antioxidant responses. Eur Respir J 13: 1418-1428.

Bloom B, Cohen RA, Freeman G. (2011). Summary health statistics for U.S. children: National Health Interview Survey, 2010. National Center for Health Statistics. Vital Health Stat 10(250). http://www.cdc.gov/nchs/data/series/sr_10/sr10_250.pdf.

Bosson, J; Stenfors, N; Bucht, A; Helleday, R; Pourazar, J; Holgate, ST; Kelly, FJ; Sandstrom, T; Wilson, S; Frew, AJ; Blomberg, A. (2003). Ozone-induced bronchial epithelial cytokine expression differs between healthy and asthmatic subjects. Clin Exp Allergy 33: 777-782.

Boylan, P., Helmig, D., Park, J.-H. (2014) Characterization and mitigation of water vapor effects in the measurement of ozone by chemiluminescence with nitric oxide. Atmos. Meas. Tech. 7, 1231-1244.

Brauer, M; Blair, J; Vedal, S. (1996). Effect of ambient ozone exposure on lung function in farm workers. Am J Respir Crit Care Med 154: 981-987.

Breton, CV; Salam, MT; Vora, H; Gauderman, WJ; Gilliland, FD. (2011). Genetic variation in the glutathione synthesis pathway, air pollution, and children's lung function growth. Am J Respir Crit Care Med 183: 243-248. http://dx.doi.org/10.1164/rccm.201006-0849OC.

Broadmeadow, MSJ; Jackson, SB. (2000). Growth responses of Quercus petraea, Fraxinus excelsior and Pinussylvestris to elevated carbon dioxide, ozone and water supply. New Phytol 146: 437-451. http://dx.doi.org/10.1046/j.1469-8137.2000.00665.x.

Brown, JS; Bateson, TF; McDonnell, WF. (2008). Effects of exposure to 0.06 ppm ozone on FEV_1 in humans: A secondary analysis of existing data. Environ Health Perspect 116: 1023-1026. http://dx.doi.org/10.1289/ehp.11396.

Brunekreef, B; Hoek, G; Breugelmans, O; Leentvaar, M. (1994). Respiratory effects of low-level photochemical air pollution in amateur cyclists. Am J Respir Crit Care Med 150: 962-966.

Cakmak, S; Dales, RE; Angelica Rubio, M; Blanco Vidal, C. (2011). The risk of dying on days of higher air pollution among the socially disadvantaged elderly. Environ Res 111: 388-393. http://dx.doi.org/10.1016/j.envres.2011.01.003.

Cakmak, S; Dales, RE; Vidal, CB. (2007). Air pollution and mortality in Chile: Susceptibility among the elderly. Environ Health Perspect 115: 524-527.

Cakmak, S; Dales, RE; Judek, S. (2006). Respiratory health effects of air pollution gases: Modification by education and income. Arch Environ Occup Health 61: 5-10. http://dx.doi.org/10.3200/AEOH.61.1.5-10.

Campbell, SJ; Wanek, R; Coulston, JW. (2007). Ozone injury in west coast forests: 6 years of monitoring - Introduction. Portland, OR: U.S. Department of Agriculture.

Carey, SA; Minard, KR; Trease, LL; Wagner, JG; Garcia, GJ; Ballinger, CA; Kimbell, JS; Plopper, CG; Corley, RA; Postlethwait, EM; Harkema, JR; Einstein, DR. (2007). Three-dimensional mapping of ozone-induced injury in the nasal airways of monkeys using magnetic resonance imaging and morphometric techniques. Toxicol Pathol 35: 27-40. http://dx.doi.org/10.1080/01926230601072343.

Castillejos, M; Gold, DR; Damokosh, AI; Serrano, P; Allen, G; McDonnell, WF; Dockery, D; Velasco, SR; Hernandez, M; Hayes, C. (1995). Acute effects of ozone on the pulmonary function of exercising schoolchildren from Mexico City. Am J Respir Crit Care Med 152: 1501-1507.

Cavender, K. (2014). Network Design Considerations for the PAMS Network: Memorandum to the Ozone NAAQS Review Docket, EPA-HQ-OAR-2008-0699.

Cavender, K. (2013). Revisions to the PAMS Compound Target List: Memorandum to the Ozone NAAQS Review Docket, EPA-HQ-OAR-2008-0699.

Chen, J; Tan, M; Nemmar, A; Song, W; Dong, M; Zhang, G; Li, Y. (2006). Quantification of extrapulmonary translocation of intratracheal-instilled particles in vivo in rats: effect of lipopolysaccharide. Toxicology 222:195-201.

Chhabra, SK; Yasir, A; Chaudhry, K; Shah, B. (2010). Effect of ozone on response to ovalbumin & its modulation by vitamins C & E in sensitized guinea pigs. Indian J Med Res 132: 87-93.

Cockcroft, DW; Davis, BE; Todd, DC; Smycniuk, AJ. (2005). Methacholine challenge: Comparison of two methods. Chest 127: 839-844.

Cohen, MD; Sisco, M; Baker, K; Li, Y; Lawrence, D; Van Loveren, H; Zelikoff, JT; Schlesinger, RB. (2002). Effects of inhaled ozone on pulmonary immune cells critical to antibacterial responses in situ. Inhal Toxicol 14: 599-619. http://dx.doi.org/10.1080/08958370290084520.

Cordell, H.K., Betz, C.J., Fly, M., Mou, S., Green, G.T. (2008) How do Americans View Wilderness. A WILDERNESS Research Report in the Internet Research Information Series. National Survey on Recreation and the Environment. This research is a collaborative effort between the USDA Forest Service's Southern Research Station and its Forestry Sciences Laboratory in Athens, Georgia; the University of Georgia in Athens; and the University of Tennessee in Knoxville, Tennessee. http://warnell.forestry.uga.edu/nrrt/nsre/IRISWild/IrisWild1rptR.pdf

Dales, RE; Cakmak, S; Doiron, MS. (2006). Gaseous air pollutants and hospitalization for respiratory disease in the neonatal period. Environ Health Perspect 114: 1751-1754. http://dx.doi.org/10.1289/ehp.9044.

Darbah, JNT; Kubiske, ME; Nelson, N; Oksanen, E; Vapaavuori, E; Kamosky, DF. (2008). Effects of decadal exposure to interacting elevated CO2 and/or O-3 on paper birch (Betula papyrifera) reproduction. Environ Pollut 155: 446-452. http://dx.doi.org/10.1016/j.envpol.2008.01.033.

Davis, DD. (2007a). Ozone-induced symptoms on vegetation within the Moosehorn National Wildlife Refuge in 3 Maine. Northeast Nat 14: 403-414. http://dx.doi.org/10.1656/1092-6194(2007)14[403:OSOVWT]2.0.CO;2.

Davis, DD. (2007b). Ozone injury to plants within the Seney National Wildlife Refuge in northern Michigan. Northeast Nat 14: 415-424.

Davis, DD. (2009). Ozone-induced stipple on plants in the Cape Romain National Wildlife Refuge, South Carolina. Southeastern Naturalist 8: 471-478.

Davis, DD; Orendovici, T. (2006). Incidence of ozone symptoms on vegetation within a National Wildlife Refuge in New Jersey, USA. Environ Pollut 143: 555-564. http://dx.doi.org/10.1016/j.envpol.2005.10.051.

Delfino, RJ; Staimer, N; Tjoa, T; Arhami, M; Polidori, A; Gillen, DL; George, SC; Shafer, MM; Schauer, JJ; Sioutas, C. (2010). Associations of primary and secondary organic aerosols with airway and systemic inflammation in an elderly panel cohort. Epidemiology 21: 892-902. http://dx.doi.org/10.1097/EDE.0b013e3181f20e6c.

Depuydt, P; Joos, GF; Pauwels, RA. (1999). Ambient ozone concentrations induce airway hyperresponsiveness in some rat strains. Eur Respir J 14: 125-131.

Devlin, RB; Folinsbee, LJ; Biscardi, F; Hatch, G; Becker, S; Madden, MC; Robbins, M; Koren, HS. (1997). Inflammation and cell damage induced by repeated exposure of humans to ozone. Inhal Toxicol 9: 211-235.

Devlin, RB; Mcdonnell, WF; Mann, R; Becker, S; House, DE; Schreinemachers, D; Koren, HS. (1991). Exposure of humans to ambient levels of ozone for 6.6 hours causes cellular and biochemical changes in the lung. Am J Respir Cell Mol Biol 4: 72-81.

Dimeo, MJ; Glenn, MG; Holtzman, MJ; Sheller, JR; Nadel, JA; Boushey, HA. (1981). Threshold concentration of ozone causing an increase in bronchial reactivity in humans and adaptation with repeated exposures. Am Rev Respir Dis 124: 245-248.

Driscoll, KE; Vollmuth, TA; Schlesinger, RB. (1987). Acute and subchronic ozone inhalation in the rabbit: Response of alveolar macrophages. J Toxicol Environ Health 21: 27-43. http://dx.doi.org/10.1080/15287398709531000.

Dryden, DM; Spooner, CH; Stickland, MK; Vandermeer, B; Tjosvold, L; Bialy, L; Wong, K; Rowe, BH. (2010). Exercise-induced bronchoconstriction and asthma. (AHRQ Publication No. 10-E001). Rockville, MD: Agency for Healthcare Research and Quality.

Eresmaa, N., Karppinen, S.M., Joffre, S.M. Rasanene, J., Talvitie, H. (2006). Mixing Height Determination by Ceilometer, Atmospheric Chemistry and Physics, 6. 1485-1493.

Escamilla-Nuñez, MC; Barraza-Villarreal, A; Hernandez-Cadena, L; Moreno-Macias, H; Ramirez-Aguilar, M; Sienra-Monge, JJ; Cortez-Lugo, M; Texcalac, JL; del Rio-Navarro, B; Romieu, I. (2008). Traffic-related air pollution and respiratory symptoms among asthmatic children, resident in Mexico City: The EVA cohort study. Respir Res 9: 74. http://dx.doi.org/10.1186/1465-9921-9-74.

Fanucchi, MV; Plopper, CG; Evans, MJ; Hyde, DM; Van Winkle, LS; Gershwin, LJ; Schelegle, ES. (2006). Cyclic exposure to ozone alters distal airway development in infant rhesus monkeys. Am J Physiol Lung Cell Mol Physiol 291: L644-L650. http://dx.doi.org/10.1152/ajplung.00027.2006.

Federal Register (1979). Part 51 – Requirements for Preparation, Adoption, and Submittal of Implementation Plans: Emissions Offset Interpretative Ruling; Final Rule. 40 CFR 51. Federal Register 44:3274.

Federal Register (1980). Requirements for Preparation, Adoption, and Submittal of SIPS; Approval and Promulgation of State Implementation Plans; Final Rule. 40 CFR 51 and 52. Federal Register 45:31307.

Federal Register (1980). Requirements for Preparation, Adoption, and Submittal of Implementation Plans; Approval and Promulgation of Implementations Plans; Final Rule. 40 CFR 51, 52 and 124. Federal Register 45:52676.

Federal Register (1987). Regulations for Implementing Revised Particulate Matter Standards; Final Rule. 40 CFR 51 and 52; Federal Register 52:24672.

Federal Register (1997). National Ambient Air Quality Standards for Ozone; Final Rule. 40 CFR 50; Federal Register 62:38856.

Federal Register (1998). Indian Tribes: Air Quality Planning and Management; Final Rule. 40 CFR 9, 35, 49, 50, and 81; Federal Register 63:7254.

Federal Register (1998). Finding of Significant Contribution and Rulemaking for Certain States in the Ozone Transport Assessment Group Region for Purposes of Reducing Regional Transport of Ozone; Final Rule. 40 CFR 51, 72, 75, and 96; Federal Register 63: 57356.

Federal Register (2004). Approval and Promulgation of Implementation Plans for Texas; Approval of Section 179B Demonstration of Attainment, Volatile Organic Compounds and Nitrogen Oxides Motor Vehicle Emissions Budgets for Conformity for the El Paso Ozone Nonattainment Area; Direct Final Approval. 40 CFR 52; Federal Register 69:32450.

Federal Register (2005). Rule to Reduce Interstate Transport of Fine Particulate Matter and Ozone (Clean Air Interstate Rule); Revisions to Acid Rain Program; Revisions to the NOx SIP Call; Final Rule. 40 CFR 51, 72, 73, 74, 77, 78 and 96; Federal Register 70: 25162.

Federal Register (2007). Treatment of Data Influenced by Exceptional Events; Final Rule. 40 CFR 50 and 51; Federal Register 72:13560.

Federal Register (2007). National Ambient Air Quality Standards for Ozone; Proposed Rule. 40 CFR 50; Federal Register 72: 37818.

Federal Register (2008). National Ambient Air Quality Standards for Ozone; Final Rule. 40 CFR parts 50 and 58; Federal Register 73:16436.

Federal Register (2008). Implementation of the New Source Review (NSR) Program for Particulate Matter Less Than 2.5 Micrometers ($PM_{2.5}$); Final Rule. 40 CFR 51 and 52; Federal Register 73: 28321.

Federal Register (2010). Revisions to the General Conformity Regulations; Final Rule. 40 CFR 51 and 93; Federal Register 75:17254.

Federal Register (2010). National Ambient Air Quality Standards for Ozone; Proposed Rule. 40 CFR 50 and 58; Federal Register 75 FR: 2938.

Federal Register (2011). Federal Implementation Plans: Interstate Transport of Fine Particulate Matter and Ozone and Correction of SIP Approvals; Final Rule. 40 CFR 51, 52, 72, 78 and 97; Federal Register 76:48208.

Federal Register (2012). National Emission Standards for Hazardous Air Pollutants From Coal- and Oil-Fired Electric Utility Steam Generating Units and Standards of Performance for Fossil-Fuel-Fired Electric Utility, Industrial-Commercial-Institutional, and Small Industrial-Commercial-Institutional Steam Generating Units; Final Rule. 40 CFR 60 and 63; Federal Register 77:9304.

Federal Register (2012). Implementation of the 2008 National Ambient Air Quality Standards for Ozone: Nonattainment Area Classifications Approach, Attainment Deadlines and

Revocation of the 1997 Ozone Standards for Transportation Conformity Purposes; Final Rule. 40 CFR 50 and 51; Federal Register 77:30160.

Federal Register (2012). National Ambient Air Quality Standards for Particulate Matter; Proposed Rule. 40 CFR 50, 51, 52, 53 and 58; Federal Register 77:38890.

Federal Register (2012). National Ambient Air Quality Standards for Oxides of Nitrogen and Sulfur; Final Rule. 40 CFR 50; Federal Register 77:20218.

Federal Register (2013). National Ambient Air Quality Standards for Particulate Matter; Final Rule. 40 CFR 50, 51, 52, 53 and 58; Federal Register 78:3086.

Federal Register (2013). Implementation of the 2008 National Ambient Air Quality Standards for Ozone: State Implementation Plan Requirements; Proposed Rule. 40 CFR 50, 51, 70 and 71; Federal Register 78:34178.

Federal Register (2014). Control of Pollution from Motor Vehicles: Tier 3 Motor Vehicle Emission and Fuel Standards; Final Rule. 40 CFR 79, 80, 85, 86, 600, 1036, 1037, 1039, 1042, 1048, 1054, 1065 and 1066; Federal Register 79:23414.

Federal Register (2014). Carbon Pollution Guidelines for Existing Stationary Sources: Electric Utility Generating Units; Proposed Rule. 40 CFR 60; Federal Register 79:34830.

Feo Brito, F; Mur Gimeno, P; Martinez, C; Tobias, A; Suarez, L; Guerra, F; Borja, JM; Alonso, AM. (2007). Air pollution and seasonal asthma during the pollen season: A cohort study in Puertollano and Ciudad Real (Spain). Allergy 62: 1152-1157. http://dx.doi.org/10.1111/j.1398-9995.2007.01438.x.

Folinsbee, LJ; Hazucha, MJ. (2000). Time course of response to ozone exposure in healthy adult females. Inhal Toxicol 12: 151-167.

Folinsbee, LJ; Horstman, DH; Kehrl, HR; Harder, S; Abdul-Salaam, S; Ives, PJ. (1994). Respiratory responses to repeated prolonged exposure to 0.12 ppm ozone. Am J Respir Crit Care Med 149: 98-105.

Folinsbee, LJ; Hazucha, MJ. (1989). Persistence of ozone-induced changes in lung function and airway responsiveness. In Atmospheric ozone research and its policy implications. Amsterdam, The Netherlands: Elsevier.

Folinsbee, LJ; McDonnell, WF; Horstman, DH. (1988). Pulmonary function and symptom responses after 6.6-hour exposure to 0.12 ppm ozone with moderate exercise. J Air Waste Manag Assoc 38: 28-35.

Frampton, MW; Morrow, PE; Torres, A; Cox, C; Voter, KZ; Utell, MJ; Gibb, FR; Speers, DM. (1997). Ozone responsiveness in smokers and nonsmokers. Am J Respir Crit Care Med 155: 116-121.

Frey, H.C. and Samet, J.M. (2012a). CASAC Review of the EPA's Policy Assessment for the Review of the Ozone National Ambient Air Quality Standards (First External Review Draft – August 2012). EPA-CASAC-13-003. November 26, 2012.

Frey, H.C. and Samet, J.M. (2012b). CASAC Review of the EPA's Health Risk and Exposure Assessment for Ozone (First External Review Draft - Updated August 2012) and Welfare Risk and Exposure Assessment for Ozone (First External Review Draft - Updated August 2012). EPA-CASAC-13-002. November 19, 2012.

Frey, HC (2014a). Letter from CASAC Chairman H. Christopher Frey to EPA Administrator Gina McCarthy. CASAC Review of the EPA's *Health Risk and Exposure Assessment for Ozone (Second External Review Draft – February, 2014)*. July 1, 2014. EPA-CASAC-14-005.

Frey, HC (2014b). Letter from CASAC Chairman H. Christopher Frey to EPA Administrator Gina McCarthy. CASAC Review of the EPA's *Welfare Risk and Exposure Assessment for Ozone (Second External Review Draft)*. June 18, 2104. EPA-CASAC-14-003.

Frey, HC (2014c). Letter from CASAC Chairman H. Christopher Frey to EPA Administrator Gina McCarthy. CASAC Review of the EPA's *Second Draft Policy Assessment for the Review of the Ozone National Ambient Air Quality Standards*. June, 26, 2014. EPA-CASAC-14-004.

Gielen, MH; Van Der Zee, SC; Van Wijnen, JH; Van Steen, CJ; Brunekreef, B. (1997). Acute effects of summer air pollution on respiratory health of asthmatic children. Am J Respir Crit Care Med 155: 2105-2108.

Gold, DR; Damokosh, AI; III, PC; Dockery, DW; McDonnell, WF; Serrano, P; Retama, A; Castillejos, M. (1999). Particulate and ozone pollutant effects on the respiratory function of children in southwest Mexico City. Epidemiology 10: 8-16.

Gong, H, Jr; McManus, MS; Linn, WS. (1997). Attenuated response to repeated daily ozone exposures in asthmatic subjects. Arch Environ Occup Health 52: 34-41.

Greer, JR; Abbey, DE; Burchette, RJ. (1993). Asthma related to occupational and ambient air pollutants in nonsmokers. J Occup Environ Med 35: 909-915.

Grulke, NE; Johnson, R; Esperanza, A; Jones, D; Nguyen, T; Posch, S; Tausz, M. (2003). Canopy transpiration of Jeffrey pine in mesic and xeric microsites: O_3 uptake and injury response. Trees Struct Funct 17: 292-298.

Haefele, M., R.A. Kramer, and T.P. Holmes. (1991). Estimating the Total Value of a Forest Quality in High-Elevation Spruce-Fir Forests. The Economic Value of Wilderness: Proceedings of the Conference. Gen. Tech. Rep. SE-78 (pp. 91-96). Southeastern For. Exper. Station. Asheville, NC: USDA Forest Service.

Halonen, JI; Lanki, T; Tiittanen, P; Niemi, JV; Loh, M; Pekkanen, J. (2009). Ozone and cause-specific cardiorespiratory morbidity and mortality. J Epidemiol Community Health 64: 814-820. http://dx.doi.org/10.1136/jech.2009.087106.

Hatch, GE; Slade, R; Harris, LP; Mcdonnell, WF; Devlin, RB; Koren, HS; Costa, DL; Mckee, J. (1994). Ozone dose and effect in humans and rats: A comparison using oxygen-18 labeling and bronchoalveolar lavage. Am J Respir Crit Care Med 150: 676-683.

Heagle, AS. (1989). Ozone and crop yield*. Annu Rev Phytopathol 27: 397-423. http://dx.doi.org/10.1146/annurev.py.27.090189.002145.

Heck, WW; Cowling, EB. (1997).The need for a long term cumulative secondary ozone standard - An ecological perspective. EM January: 23-33.

Henderson, R. (2008). Letter from CASAC Chairman Rogene Henderson to EPA Administrator Stephen Johnson. April 7, 2008, EPA-CASAC-08-001.

Henderson, R. (2007). Letter from CASAC Chairman Rogene Henderson to EPA Administrator Stephen Johnson. March 26, 2007, EPA-CASAC-07-002.

Henderson, R. (2006). Letter from CASAC Chairman Rogene Henderson to EPA Administrator Stephen Johnson. October 24, 2006, EPA-CASAC-07-001.

Hernandez, ML; Lay, JC; Harris, B; Esther, CR; Brickey, WJ; Bromberg, PA; Diaz-Sanchez, D; Devlin, RB; Kleeberger, SR; Alexis, NE; Peden, DB. (2010). Atopic asthmatic subjects but not atopic subjects without asthma have enhanced inflammatory response to ozone. J Allergy Clin Immunol 126: 537-544. http://dx.doi.org/10.1016/j.jaci.2010.06.043.

Hiltermann, JTN; Lapperre, TS; Van Bree, L; Steerenberg, PA; Brahim, JJ; Sont, JK; Sterk, PJ; Hiemstra, PS; Stolk, J. (1999). Ozone-induced inflammation assessed in sputum and bronchial lavage fluid from asthmatics: A new noninvasive tool in epidemiologic studies on air pollution and asthma. Free Radic Biol Med 27: 1448-1454.

Hoek, G; Brunekreef, B; Kosterink, P; Van den Berg, R; Hofschreuder, P. (1993). Effect of ambient ozone on peak expiratory flow of exercising children in the Netherlands. Arch Environ Occup Health 48: 27-32. http://dx.doi.org/10.1080/00039896.1993.9938390

Holmes, T., and R. Kramer. (1995). "An Independent Sample Test of Yea-Saying and StartingPoint Bias in Dichotomous-Choice Contingent Valuation." Journal of Environmental Economics and Management 28:121-132.

Holz, O; Tal-Singer, R; Kanniess, F; Simpson, KJ; Gibson, A; Vessey, RSJ; Janicki, S; Magnussen, H; Jorres, RA; Richter, K. (2005). Validation of the human ozone challenge model as a tool for assessing antiinflammatory drugs in early development. J Clin Pharmacol 45: 498-503.

Holz, O; Mucke, M; Paasch, K; Bohme, S; Timm, P; Richter, K; Magnussen, H; Jorres, RA. (2002). Repeated ozone exposures enhance bronchial allergen responses in subjects with rhinitis or asthma. Clin Exp Allergy 32: 681-689.

Holz, O; Jorres, RA; Timm, P; Mucke, M; Richter, K; Koschyk, S; Magnussen, H. (1999). Ozone-induced airway inflammatory changes differ between individuals and are reproducible. Am J Respir Crit Care Med 159: 776-784.

Hoppe, P; Peters, A; Rabe, G; Praml, G; Lindner, J; Jakobi, G; Fruhmann, G; Nowak, D. (2003). Environmental ozone effects in different population subgroups. Int J Hyg Environ Health 206: 505-516. http://dx.doi.org/10.1078/1438-4639-00250.

Horstman, DH; Ball, BA; Brown, J; Gerrity, T; Folinsbee, LJ. (1995). Comparison of pulmonary responses of asthmatic and nonasthmatic subjects performing light exercise while exposed to a low level of ozone. Toxicol Ind Health 11: 369-385.

Horstman, DH; Folinsbee, LJ; Ives, PJ; Abdul-Salaam, S; McDonnell, WF. (1990). Ozone concentration and pulmonary response relationships for 6.6-hour exposures with five hours of moderate exercise to 0.08, 0.10, and 0.12 ppm. Am J Respir Crit Care Med 142: 1158-1163.

Howden, Lindsay M. and Meyer, Julie A. (2011). U.S. Census Bureau, 2010 Census Briefs, C2010BR-03, Age and Sex Composition: 2010, U.S. Department of Commerce, Economics and Statistics Administration, U.S. Census Bureau, Washington, DC 20233. http://www.census.gov/prod/cen2010/briefs/c2010br-03.pdf.

Hurst, DJ; Gardner, DE; Coffin, DL. (1970). Effect of ozone on acid hydrolases of the pulmonary alveolar macrophage. J Reticuloendothel Soc 8: 288-300.

Islam, T; Berhane, K; McConnell, R; Gauderman, WJ; Avol, E; Peters, JM; Gilliland, FD. (2009). Glutathione-S-transferase (GST) P1, GSTM1, exercise, ozone and asthma incidence in school children. Thorax 64: 197-202. http://dx.doi.org/10.1136/thx.2008.099366.

Islam, T; McConnell, R; Gauderman, WJ; Avol, E; Peters, JM; Gilliland, FD. (2008). Ozone, oxidant defense genes and risk of asthma during adolescence. Am J Respir Crit Care Med 177: 388-395. http://dx.doi.org/10.1164/rccm.200706-863OC.

Islam, T; Gauderman, WJ; Berhane, K; McConnell, R; Avol, E; Peters, JM; Gilliland, FD. (2007). The relationship between air pollution, lung function and asthma in adolescents. Thorax 62: 957-963.

Ito, K; Thurston, GD; Silverman, RA. (2007). Characterization of PM2.5, gaseous pollutants, and meteorological interactions in the context of time-series health effects models. J Expo Sci Environ Epidemiol 17: S45-S60.

Jalaludin, BB; O'Toole, BI; Leeder, S. R. (2004). Acute effects of urban ambient air pollution on respiratory symptoms, asthma medication use, and doctor visits for asthma in a cohort of

Australian children. Environ Res 95: 32-42. http://dx.doi.org/10.1016/S0013-9351 (03)00038-0.

Jerrett, M; Burnett, RT; Pope, CA, III; Ito, K; Thurston, G; Krewski, D; Shi, Y; Calle, E; Thun, M. (2009). Long-term ozone exposure and mortality. N Engl J Med 360: 1085-1095. http://dx.doi.org/10.1056/NEJMoa0803894.

Johnston, RA; Schwartzman, IN; Flynt, L; Shore, SA. (2005). Role of interleukin-6 in murine airway responses to ozone. Am J Physiol Lung Cell Mol Physiol 288: L390-L397.

Jorres, R; Nowak, D; Magnussen, H; Speckin, P; Koschyk, S. (1996). The effect of ozone exposure on allergen responsiveness in subjects with asthma or rhinitis. Am J Respir Crit Care Med 153: 56-64.

Just, J; Segala, C; Sahraoui, F; Priol, G; Grimfeld, A; Neukirch, F. (2002). Short-term health effects of particulate and photochemical air pollution in asthmatic children. Eur Respir J 20: 899-906. http://dx.doi.org/10.1183/09031936.02.00236902.

Kan, H; London, SJ; Chen, G; Zhang, Y; Song, G; Zhao, N; Jiang, L; Chen, B. (2008). Season, sex, age, and education as modifiers of the effects of outdoor air pollution on daily mortality in Shanghai, China: The Public Health and Air Pollution in Asia (PAPA) Study. Environ Health Perspect 116: 1183-1188. http://dx.doi.org/10.1289/ehp.10851.

Katsouyanni, K; Samet, JM; Anderson, HR; Atkinson, R; Le Tertre, A; Medina, S; Samoli, E; Touloumi, G; Burnett, RT; Krewski, D; Ramsay, T; Dominici, F; Peng, RD; Schwartz, J; Zanobetti, A. (2009). Air pollution and health: A European and North American approach (APHENA). (Research Report 142). Boston, MA: Health Effects Institute. http://pubs.healtheffects.org/view.php?id=327.

Kehrl, HR; Peden, DB; Ball, BA; Folinsbee, LJ; Horstman, DH. (1999). Increased specific airway reactivity of persons with mild allergic asthma after 7.6 hours of exposure to 0.16 ppm ozone. J Allergy Clin Immunol 104: 1198-1204.

Khatri, SB; Holguin, FC; Ryan, PB; Mannino, D; Erzurum, SC; Teague, WG. (2009). Association of ambient ozone exposure with airway inflammation and allergy in adults with asthma. J Asthma 46: 777-785. http://dx.doi.org/10.1080/02770900902779284.

Kim, CS; Alexis, NE; Rappold, AG; Kehrl, H; Hazucha, MJ; Lay, JC; Schmitt, MT; Case, M; Devlin, RB; Peden, DB; Diaz-Sanchez, D. (2011). Lung function and inflammatory responses in healthy young adults exposed to 0.06 ppm ozone for 6.6 hours. Am J Respir Crit Care Med 183: 1215-1221. http://dx.doi.org/10.1164/rccm.201011-1813OC.

King, JS; Kubiske, ME; Pregitzer, KS; Hendrey, GR; McDonald, EP; Giardina, CP; Quinn, VS; Karnosky, DF. (2005). Tropospheric O3 compromises net primary production in young stands of trembling aspen, paper birch and sugar maple in response to elevated atmospheric CO2. New Phytol 168: 623-635. http://dx.doi.org/10.1111/j.1469-8137.2005.01557.x.

Kline, LJ; Davis, DD; Skelly, JM; Savage, JE; Ferdinand, J. (2008). Ozone sensitivity of 28 plant selections exposed to ozone under controlled conditions. Northeast Nat 15: 57-66. http://dx.doi.org/10.1656/1092- 6194(2008)15[57:OSOPSE]2.0.CO;2.

Kohut, R. (2007). Assessing the risk of foliar injury from ozone on vegetation in parks in the US National Park Service's Vital Signs Network. Environ Pollut 149: 348-357.

Koren, HS, RB Devlin, DE Graham; R Mann; MP Mcgee; DH Horstman; WJ Kozumbo; S Becker; DE House; WF McDonnell; PA Bromberg. (1989). Ozone-induced inflammation in the lower airways of human subjects. Am. Rev. Respir. Dis. 139:407-415.

Kreit, JW; Gross, KB; Moore, TB; Lorenzen, TJ; D'Arcy, J; Eschenbacher, WL. (1989). Ozone-induced changes in pulmonary function and bronchial responsiveness in asthmatics. J Appl Physiol 66: 217-222.

Kubiske, ME; Quinn, VS; Heilman, WE; McDonald, EP; Marquardt, PE; Teclaw, RM; Friend, AL; Karnoskey, DF. (2006). Interannual climatic variation mediates elevated CO_2 and O_3 effects on forest growth. Global Change Biol 12: 1054-1068. http://dx.doi.org/10.1111/j.1365-2486.2006.01152.x.

Kubiske, ME; Quinn, VS; Marquardt, PE; Karnosky, DF. (2007). Effects of elevated atmospheric CO_2 and/or O_3 on intra- and interspecific competitive ability of aspen. Plant Biol (Stuttg) 9: 342-355. http://dx.doi.org/10.1055/s-2006-924760.

Kulle, TJ; Sauder, LR; Kerr, HD; Farrell, BP; Bermel, MS; Smith, DM. (1982). Duration of pulmonary function adaptation to ozone in humans. Am Ind Hyg Assoc J 43: 832-837.

Künzli, N. (2012). Is air pollution of the 20th century a cause of current asthma hospitalisations? [Editorial]. Thorax 67: 2-3. http://dx.doi.org/10.1136/thoraxjnl-2011-200919.

Larsen, ST; Matsubara, S; Mcconville, G; Poulsen, SS; Gelfand, EW. (2010). Ozone increases airway hyperreactivity and mucus hyperproduction in mice previously exposed to allergen. J Toxicol Environ Health A 73: 738-747. http://dx.doi.org/10.1080/15287391003614034.

Lee, EH; Hogsett, WE. (1996). Methodology for calculating inputs for ozone secondary standard benefits analysis: Part II. Research Triangle Park, NC: U.S. Environmental Protection Agency.

Lefohn, AS; Jackson, W; Shadwick, DS; Knudsen, HP. (1997). Effect of surface ozone exposures on vegetation grown in the southern Appalachian Mountains: Identification of possible areas of concern. Atmos Environ 31: 1695-1708. http://dx.doi.org/10.1016/S1352-2310(96)00258-0.

Lewis, TC; Robins, TG; Dvonch, JT; Keeler, GJ; Yip, FY; Mentz, GB; Lin, X; Parker, EA; Israel, BA; Gonzalez, L; Hill, Y. (2005). Air pollution-associated changes in lung function among asthmatic children in Detroit. Environ Health Perspect 113: 1068-1075.

Lin, S; Bell, EM; Liu, W; Walker, RJ; Kim, NK; Hwang, SA. (2008a). Ambient ozone concentration and hospital admissions due to childhood respiratory diseases in New York State, 1991-2001. Environ Res 108: 42-47. http://dx.doi.org/10.1016/j.envres.2008.06.007.

Lin, S; Liu, X; Le, LH; Hwang, SA. (2008b). Chronic exposure to ambient ozone and asthma hospital admissions among children. Environ Health Perspect 116: 1725-1730. http://dx.doi.org/10.1289/ehp.11184.

Linn, WS; Shamoo, DA; Anderson, KR; Peng, RC; Avol, EL; Hackney, JD; Gong, H, Jr. (1996). Short-term air pollution exposures and responses in Los Angeles area schoolchildren. J Expo Sci Environ Epidemiol 6: 449-472.

Liu, L; Poon, R; Chen, L; Frescura, AM; Montuschi, P; Ciabattoni, G; Wheeler, A; Dales, R. (2009). Acute effects of air pollution on pulmonary function, airway inflammation, and oxidative stress in asthmatic children. Environ Health Perspect 117: 668-674. http://dx.doi.org/10.1289/ehp11.

Low, M; Herbinger, K; Nunn, AJ; Haberle, KH; Leuchner, M; Heerdt, C; Werner, H; Wipfler, P; Pretzsch, H; Tausz, M; Matyssek, R. (2006). Extraordinary drought of 2003 overrules ozone impact on adult beech trees (Fagus sylvatica). Trees Struct Funct 20: 539-548. http://dx.doi.org/10.1007/s00468-006-0069-z.

Maier-Maercker, U. (1998). Predisposition of trees to drought stress by ozone. Tree Physiol 19: 71-78.

Mar, TF; Koenig, JQ. (2009). Relationship between visits to emergency departments for asthma and ozone exposure in greater Seattle, Washington. Ann Allergy Asthma Immunol 103: 474-479.

McCarthy, G. (2012). Letter from Gina McCarthy, Assistant Administrator, to Robert Ukeiley, (January 4, 2012). Available at http://www.epa.gov/scram001/10thmodconf/review_material/Sierra _Club_Petition_OAR-11-002-1093.pdf.

McConnell, R; Berhane, K; Gilliland, F; London, SJ; Islam, T; Gauderman, WJ; Avol, E; Margolis, HG; Peters, JM. (2002). Asthma in exercising children exposed to ozone: A cohort study. Lancet 359: 386-391.

McDonnell, WF; Stewart, PW; Smith, MV; Kim, CS; Schelegle, ES. (2012). Prediction of lung function response for populations exposed to a wide range of ozone conditions. Inhal Toxicol 24: 619-633.

McDonnell, WF; Abbey, DE; Nishino, N; Lebowitz, MD. (1999). Long-term ambient ozone concentration and the incidence of asthma in nonsmoking adults: the Ahsmog study. Environ Res 80: 110-121.

McDonnell, WF. (1996). Individual variability in human lung function responses to ozone exposure. Environ Toxicol Pharmacol 2: 171-175.

McDonnell, WF; Kehrl, HR; Abdul-Salaam, S; Ives, PJ; Folinsbee, LJ; Devlin, RB; O'Neil, JJ; Horstman, DH. (1991). Respiratory response of humans exposed to low levels of ozone for 6.6 hours. Arch Environ Occup Health 46: 145-150.

McDonnell, WF; Chapman, RS; Horstman, DH; Leigh, MW; Abdul-Salaam, S. (1985). A comparison of the responses of children and adults to acute ozone exposure.

McLaughlin, SB; Nosal, M; Wullschleger, SD; Sun, G. (2007a). Interactive effects of ozone and climate on tree growth and water use in a southern Appalachian forest in the USA. New Phytol 174: 109-124. http://dx.doi.org/10.1111/j.1469-8137.2007.02018.x.

McLaughlin, SB; Wullschleger, SD; Sun, G; Nosal, M. (2007b). Interactive effects of ozone and climate on water use, soil moisture content and streamflow in a southern Appalachian forest in the USA. New Phytol 174: 125-136. http://dx.doi.org/10.1111/j.1469-8137.2007.01970.x.

Medina-Ramón, M; Schwartz, J. (2008). Who is more vulnerable to die from ozone air pollution? Epidemiology 19: 672-679.

Medina-Ramon, M; Zanobetti, A; Schwartz, J. (2006). The effect of ozone and PM10 on hospital admissions for pneumonia and chronic obstructive pulmonary disease: A national multicity study. Am J Epidemiol 163: 579-588. http://dx.doi.org/10.1093/aje/kwj078.

Middleton, N; Yiallouros, P; Kleanthous, S; Kolokotroni, O; Schwartz, J; Dockery, DW; Demokritou, P; Koutrakis, P. (2008). A 10-year time-series analysis of respiratory and cardiovascular morbidity in Nicosia, Cyprus: The effect of short-term changes in air pollution and dust storms. Environ Health 7: 39.

Morgan, PB; Ainsworth, EA; Long, SP. (2003). How does elevated ozone impact soybean? Ameta-analysis of photosynthesis, growth and yield. Plant Cell Environ 26: 1317-1328.

Mortimer, KM; Neas, LM; Dockery, DW; Redline, S; Tager, IB. (2002). The effect of air pollution on inner-city children with asthma. Eur Respir J 19: 699-705. http://dx.doi.org/10.1183/09031936.02.00247102.

Mudway, IS; Kelly, FJ. (2004). An investigation of inhaled ozone dose and the magnitude of airway inflammation in healthy adults. Am J Respir Crit Care Med 169: 1089-1095.

Mudway, IS; Kelly, FJ. (2000). Ozone and the lung: A sensitive issue. Mol Aspects Med 21: 1-48.

Mudway, IS; Stenfors, N; Blomberg, A; Helleday, R; Dunster, C; Marklund, SL; Frew, AJ; Sandstrom, T; Kelly, FJ. (2001). Differences in basal airway antioxidant concentrations are not predictive of individual responsiveness to ozone: A comparison of healthy and mild asthmatic subjects. Free Radic Biol Med 31: 962-974.

NAS (National Academy of Sciences). (1991). Rethinking the Ozone Problem in Urban and Regional Air Pollution, Committee on Tropospheric Ozone, National Resource Council, National Academy Press, Washington, D.C. 20001. ISBN: 0-309-56037-3.

Neidell, M. (2009). Information, avoidance behavior, and health: The effect of ozone on asthma hospitalizations. Journal of Human Resources 44: 450-478.

Neidell, M; Kinney, PL. (2010). Estimates of the association between ozone and asthma hospitalizations that account for behavioral responses to air quality information. Environ Sci Pol 13: 97-103. http://dx.doi.org/10.1016/j.envsci.2009.12.006.

NHLBI (National Institutes of Health, National Heart Lung and Blood Institute). (2007). Expert panel report 3: guidelines for the diagnosis and management of asthma. (07-4051). Bethesda, MD: National Institute of Health.

NRC (2008). Estimating Mortality Risk Reduction and Economic Benefits from Controlling Ozone Air Pollution. Washington, DC: *The National Academies Press*.

O'Connor, GT; Neas, L; Vaughn, B; Kattan, M; Mitchell, H; Crain, EF; III, ER; Gruchalla, R; Morgan, W; Stout, J; Adams, GK; Lippmann, M. (2008). Acute respiratory health effects of air pollution on children with asthma in U.S. inner cities. J Allergy Clin Immunol 121: 1133-1139. http://dx.doi.org/10.1016/j.jaci.2008.02.020.

Ollison, W.M., Crow, W., Spicer, C.W. (2013). Field testing of new-technology ambient air ozone monitors. J. Air Waste Manage. Assoc., 63 (7), 855-863.

O*Net OnLine (2012). Work Context — Outdoors, Exposed to Weather. http://www.onetonline.org/find/descriptor/result/4.C.2.a.1.c?a=1.

Ostro, B; Lipsett, M; Mann, J; Braxton-Owens, H; White, M. (2001). Air pollution and exacerbation of asthma in African-American children in Los Angeles. Epidemiology 12: 200-208.

Page, S. (2010). Applicability of the Federal Prevention of Significant Deterioration Permit Requirements to New and Revised National Ambient Air Quality Standards, Memorandum from Stephen D. Page, Director, Office of Air Quality Planning & Standards, to Air Division Directors and Deputies, Regions I – X, (April 1, 2010).

Page, S. (2010). Guidance Concerning Implementation of the 1-hour SO2 NAAQS for the Prevention of Significant Deterioration Program, Memorandum from Stephen D. Page, Director, EPA Office of Air Quality Planning and Standards, to Regional Air Division Directors, (August 23, 2010).

Page, S. (2011). Guidance to Regions for Working with Tribes during the National Ambient Air Quality Standards (NAAQS) Designations Process, Memorandum from Stephen D. Page, Director, EPA Office of Air Quality Planning and Standards to Regional Air Directors, Regions I-X, December 20, 2011. Available: http://www.epa.gov/ttn/oarpg/t1/memoranda/20120117naaqsguidance.pdf.

Page, S. (2013). Guidance on Infrastructure State Implementation Plan (SIP) Elements under Clean Air Act Sections 110(a)(1) and 110(a)(2), Memorandum from Stephen D. Page, Director, EPA Office of Air Quality Planning and Standards to Regional Air Directors, Regions I-X, September 13, 2013. Available: http://www.epa.gov/oar/urbanair/sipstatus/infrastructure.html.

Parrish, D.D., Fehsenfeld, F.C., (2000). Methods for gas-phase measurements of ozone, ozone precursors and aerosol precursors. Atmos. Environ., 34 (12-14), 1921-1957.

Peden, DB; Boehlecke, B; Horstman, D; Devlin, R. (1997). Prolonged acute exposure to 0.16 ppm ozone induces eosinophilic airway inflammation in asthmatic subjects with allergies. J Allergy Clin Immunol 100: 802-808.

Peden, DB; Setzer, RW, Jr; Devlin, RB. (1995). Ozone exposure has both a priming effect on allergen-induced responses and an intrinsic inflammatory action in the nasal airways of perennially allergic asthmatics. Am J Respir Crit Care Med 151: 1336-1345.

Pellegrino, R; Viegi, G; Brusasco, V; Crapo, RO; Burgos, F; Casaburi, R; Coates, A; van der Grinten, CP; Gustafsson, P; Hankinson, J; Jensen, R; Johnson, DC; MacIntyre, N; McKay, R; Miller, MR; Navajas, D; Pedersen, OF; Wanger, J. (2005). Interpretative strategies for lung function tests. Eur Respir J 26: 948-968. http://dx.doi.org/10.1183/09031936.05.00035205.

Phillips, S.J., Comus, P. W.A (2000). Natural History of the Sonoran Desert. University of California Press, 628 pages.

Plopper, CG; Smiley-Jewell, SM; Miller, LA; Fanucchi, MV; Evans, MJ; Buckpitt, AR; Avdalovic, M; Gershwin, LJ; Joad, JP; Kajekar, R; Larson, S; Pinkerton, KE; Van Winkle, LS; Schelegle, ES; Pieczarka, EM; Wu, R; Hyde, DM. (2007). Asthma/allergic airways disease: Does postnatal exposure to environmental toxicants promote airway pathobiology? Toxicol Pathol 35: 97-110. http://dx.doi.org/10.1080/01926230601132030.

Pollastrini, M; Desotgiu, R; Cascio, C; Bussotti, F; Cherubini, P; Saurer, M; Gerosa, G; Marzuoli, R. (2010). Growth and physiological responses to ozone and mild drought stress of tree species with different ecological requirements. Trees Struct Funct 24: 695-704. http://dx.doi.org/10.1007/s00468-010-0439-4.

Pope, CA, III; Burnett, RT; Thun, MJ; Calle, EE; Krewski, D; Ito, K; Thurston, GD. (2002). Lung cancer, cardiopulmonary mortality, and long-term exposure to fine particulate air pollution. JAMA 287: 1132-1141.

Qian, Z; Lin, HM; Chinchilli, VM; Lehman, EB; Duan, Y; Craig, TJ; Wilson, WE; Liao, D; Lazarus, SC; Bascom, R. (2009). Interaction of ambient air pollution with asthma medication on exhaled nitric oxide among asthmatics. Arch Environ Occup Health 64: 168-176. http://dx.doi.org/10.1080/19338240903240616.

Que, LG; Stiles, JV; Sundy, JS; Foster, WM. (2011). Pulmonary function, bronchial reactivity, and epithelial permeability are response phenotypes to ozone and develop differentially in healthy humans. J Appl Physiol 111: 679-687. http://dx.doi.org/10.1152/japplphysiol.00337.2011.

Rabinovitch, N; Zhang, LN; Murphy, JR; Vedal, S; Dutton, SJ; Gelfand, EW. (2004). Effects of wintertime ambient air pollutants on asthma exacerbations in urban minority children with moderate to severe disease. J Allergy Clin Immunol 114: 1131-1137. http://dx.doi.org/10.1016/j.jaci.2004.08.026.

Rice, J. (2014a). Ozone Monitoring Season Analysis: Memorandum to the Ozone NAAQS Review Docket, EPA-HQ-OAR-2008-0699.

Richards, B.L., Middleton, J.T., and Hewitt, W.B. (1958). Air pollution with relation to agronomic crops. V. Oxidant stipple on grape. Agron. J. 50:559-561.

Ridley, B.A., Grahek, F.E., Walega, J.G. (1992). A small, high-sensitivity, medium-response ozone detector suitable for measurements from light aircraft. J. Atmos. Oceanic Technol., 9 (2), 142-148.

Riediker, M; Monn, C; Koller, T; Stahel, WA; Wuthrich, B. (2001). Air pollutants enhance rhinoconjunctivitis symptoms in pollen-allergic individuals. Ann Allergy Asthma Immunol 87: 311-318. http://dx.doi.org/10.1016/S1081-1206 (10)62246-6.

Riikonen, J; Kets, K; Darbah, J; Oksanen, E; Sober, A; Vapaavuori, E; Kubiske, ME; Nelson, N; Karnosky, DF. (2008). Carbon gain and bud physiology in Populus tremuloides and Betula papyrifera grown under longterm exposure to elevated concentrations of CO2 and O3. Tree Physiol 28: 243-254. http://dx.doi.org/10.1093/treephys/28.2.243.

Rojas-Martinez, R; Perez-Padilla, R; Olaiz-Fernandez, G; Mendoza-Alvarado, L; Moreno-Macias, H; Fortoul, T; Mcdonnell, W; Loomis, D; Romieu, I. (2007). Lung function growth in children with long-term exposure to air pollutants in Mexico City. Am J Respir Crit Care Med 176: 377-384.

Romieu, I; Barraza-Villarreal, A; Escamilla-Núñez, C; Texcalac-Sangrador, JL; Hernandez-Cadena, L; Díaz-Sánchez, D; De Batlle, J; Del Rio-Navarro, BE. (2009). Dietary intake, lung function and airway inflammation in Mexico City school children exposed to air pollutants. Respir Res 10: 122.

Romieu, I; Barraza-Villarreal, A; Escamilla-Nunez, C; Almstrand, AC; Diaz-Sanchez, D; Sly, PD; Olin, AC. (2008). Exhaled breath malondialdehyde as a marker of effect of exposure to air pollution in children with asthma. J Allergy Clin Immunol 121: 903-909. http://dx.doi.org/10.1016/j.jaci.2007.12.004.

Romieu, I; Ramirez-Aguilar, M; Sienra-Monge, JJ; Moreno-Macias, H; Del Rio-Navarro, BE; David, G; Marzec, J; Hernandez-Avila, M; London, S. (2006). GSTM1 and GSTP1 and respiratory health in asthmatic children exposed to ozone. Eur Respir J 28: 953-959. http://dx.doi.org/10.1183/09031936.06.00114905.

Romieu, I; Sienra-Monge, JJ; Ramirez-Aguilar, M; Tellez-Rojo, MM; Moreno-Macias, H; Reyes-Ruiz, NI; Del Rio-Navarro, BE; Ruiz-Navarro, MX; Hatch, G; Slade, R; Hernandez-Avila, M. (2002). Antioxidant supplementation and lung functions among children with asthma exposed to high levels of air pollutants. Am J Respir Crit Care Med 166: 703-709.

Romieu, I; Meneses, F; Ruiz, S; Huerta, J; Sienra, JJ; White, M; Etzel, R; Hernandez, M. (1997). Effects of intermittent ozone exposure on peak expiratory flow and respiratory symptoms among asthmatic children in Mexico City. Arch Environ Occup Health 52: 368-376.

Romieu, I; Meneses, F; Ruiz, S; Sienra, JJ; Huerta, J; White, MC; Etzel, RA. (1996). Effects of air pollution of the respiratory health of asthmatic children living in Mexico City. Am J Respir Crit Care Med 154: 300-307.

Ross, MA; Persky, VW; Scheff, PA; Chung, J; Curtis, L; Ramakrishnan, V; Wadden, RA; Hryhorczuk, DO. (2002). Effect of ozone and aeroallergens on the respiratory health of asthmatics. Arch Environ Occup Health 57: 568-578. http://dx.doi.org/10.1080/00039890209602090.

Ryerson, T.B., Williams, E.J., Fehsenfeld, F.C. (2000). An Efficient Photolysis System for Fast-Response NO2 Measurements, Journal of Geophysical Research, Volume 105, Issue D21.

Salam, MT; Islam, T; Gauderman, WJ; Gilliland, FD. (2009). Roles of arginase variants, atopy, and ozone in childhood asthma. J Allergy Clin Immunol 123: 596-602. http://dx.doi.org/10.1016/j.jaci.2008.12.020.

Samet, J.M. (2011). Clean Air Scientific Advisory Committee (CASAC) Response to Charge Questions on the Reconsideration of the 2008 Ozone National Ambient Air Quality Standards. EPA-CASAC-11-004. March 30, 2011. Available online at: http://yosemite.epa.gov/sab/sabproduct.nsf/0/F08BEB48C1139E2A8525785E006909AC/$File/EPA-CASAC-11-004-unsigned+.pdf.

Samet, J.M. (2010). Review of EPA's Proposed Ozone National Ambient Air Quality Standard (Federal Register, Vol. 75, Nov. 11, January 19, 2010). EPA-CASAC-10-007. February 19, 2010. Available online at: http://yosemite.epa.gov/sab/sabproduct.nsf/264cb1227d55e02c85257402007446a4/610BB57CFAC8A41C852576CF007076BD/$File/EPA-CASAC-10-007-unsigned.pdf.

Samoli, E; Zanobetti, A; Schwartz, J; Atkinson, R; Le Tertre, A; Schindler, C; Pérez, L; Cadum, E; Pekkanen, J; Paldy, A; Touloumi, G; Katsouyanni, K. (2009). The temporal pattern of mortality responses to ambient ozone in the APHEA project. J Epidemiol Community Health 63: 960-966. http://dx.doi.org/10.1136/jech.2008.084012.

Sasser, E. (2014). Memo Responding to Request for Revised Ozone HREA Chapter 7 Appendix Tables. May 9, 2014. Available at http://www.epa.gov/ttn/naaqs/standards/ozone/s_o3_2008_rea.html.

Scannell, C; Chen, L; Aris, RM; Tager, I; Christian, D; Ferrando, R; Welch, B; Kelly, T; Balmes, JR. (1996). Greater ozone-induced inflammatory responses in subjects with asthma. Am J Respir Crit Care Med 154: 24-29.

Schelegle, ES; Adams, WC; Walby, WF; Marion, MS. (2012). Modelling of individual subject ozone exposure response kinetics. Inhal Toxicol 24: 401-415. http://dx.doi.org/10.3109/08958378.2012.683891.

Schelegle, ES; Morales, CA; Walby, WF; Marion, S; Allen, RP. (2009). 6.6-hour inhalation of ozone concentrations from 60 to 87 parts per billion in healthy humans. Am J Respir Crit Care Med 180: 265-272. http://dx.doi.org/10.1164/rccm.200809-1484OC.

Schelegle, ES; Siefkin, AD; McDonald, RJ. (1991). Time course of ozone-induced neutrophilia in normal humans. Am J Respir Crit Care Med 143: 1353-1358.

Schildcrout, JS; Sheppard, L; Lumley, T; Slaughter, JC; Koenig, JQ; Shapiro, GG. (2006). Ambient air pollution and asthma exacerbations in children: An eight-city analysis. Am J Epidemiol 164: 505-517. http://dx.doi.org/10.1093/aje/kwj225.

Schiller JS, Lucas JW, Ward BW, Peregoy JA. (2012). Summary health statistics for U.S. adults: National Health Interview Survey, 2010. National Center for Health Statistics. Vital Health Stat 10(252). http://www.cdc.gov/nchs/data/series/sr_10/sr10_252.pdf.

Sienra-Monge, JJ; Ramirez-Aguilar, M; Moreno-Macias, H; Reyes-Ruiz, NI; Del Rio-Navarro, BE; Ruiz-Navarro, MX; Hatch, G; Crissman, K; Slade, R; Devlin, RB; Romieu, I. (2004). Antioxidant supplementation and nasal inflammatory responses among young asthmatics exposed to high levels of ozone. Clin Exp Immunol 138: 317-322. http://dx.doi.org/10.1111/j.1365-2249.2004.02606.x.

Silverman, RA; Ito, K. (2010). Age-related association of fine particles and ozone with severe acute asthma in New York City. J Allergy Clin Immunol 125: 367-373. http://dx.doi.org/10.1016/j.jaci.2009.10.061.

Smith, G; Coulston, J; Jepsen, E; Prichard, T. (2003). A national ozone biomonitoring program: Results from field surveys of ozone sensitive plants in northeastern forests (1994-2000). Environ Monit Assess 87: 271-291.

Smith, G. (2012). Ambient ozone injury to forest plants in Northeast and North Central USA: 16 years of biomonitoring. Environ Monit Assess 184: 4049-4065. http://dx.doi.org/10.1007/s10661-011-2243-z.

Smith, RL; Xu, B; Switzer, P. (2009). Reassessing the relationship between ozone and short-term mortality in U.S. urban communities. Inhal Toxicol 21: 37-61. http://dx.doi.org/10.1080/08958370903161612.

Spektor, DM; Lippmann, M; Lioy, PJ; Thurston, GD; Citak, K; James, DJ; Bock, N; Speizer, FE; Hayes, C. (1988a). Effects of ambient ozone on respiratory function in active, normal children. Am Rev Respir Dis 137: 313-320.

Spektor, DM; Lippmann, M; Thurston, GD; Lioy, PJ; Stecko, J; O'Connor, G; Garshick, E; Speizer, FE; Hayes, C. (1988b). Effects of ambient ozone on respiratory function in healthy adults exercising outdoors. Am Rev Respir Dis 138: 821-828.

Spicer, C.W., Joseph, D.W., Ollison, W.M. (2010). A re-examination of ambient air ozone monitor interferences. J. Air and Waste Management Association, 60: 1353-1364.

SSDAN CensusScope (Social Science Data Analysis Network, CensusScope). (2010). United States: Age distribution [Database]. Ann Arbor, Michigan: Social Science Data Analysis Network. Retrieved from http://www.censusscope.org/us/chart_age.html.

Stafoggia, M; Forastiere, F; Faustini, A; Biggeri, A; Bisanti, L; Cadum, E; Cernigliaro, A; Mallone, S; Pandolfi, P; Serinelli, M; Tessari, R; Vigotti, MA; Perucci, CA. (2010). Susceptibility factors to ozone-related mortality: A population-based case-crossover analysis. Am J Respir Crit Care Med 182: 376-384. http://dx.doi.org/10.1164/rccm.200908-1269OC.

Stenfors, N; Pourazar, J; Blomberg, A; Krishna, MT; Mudway, I; Helleday, R; Kelly, FJ; Frew, AJ; Sandstrom, T. (2002). Effect of ozone on bronchial mucosal inflammation in asthmatic and healthy subjects. Respir Med 96: 352-358.

Stieb, DM; Szyszkowicz, M; Rowe, BH; Leech, JA. (2009). Air pollution and emergency department visits for cardiac and respiratory conditions: A multi-city time-series analysis. Environ Health Global Access Sci Source 8: 25. http://dx.doi.org/10.1186/1476-069X-8-25.

Strickland, MJ; Darrow, LA; Klein, M; Flanders, WD; Sarnat, JA; Waller, LA; Sarnat, SE; Mulholland, JA; Tolbert, PE. (2010). Short-term associations between ambient air pollutants and pediatric asthma emergency department visits. Am J Respir Crit Care Med 182: 307-316. http://dx.doi.org/10.1164/rccm.200908-1201OC.

Stylianou, M; Nicolich, MJ. (2009). Cumulative effects and threshold levels in air pollution mortality: Data analysis of nine large US cities using the NMMAPS dataset. Environ Pollut 157: 2216-2223. http://dx.doi.org/10.1016/j.envpol.2009.04.011.

Thaller, EI; Petronella, SA; Hochman, D; Howard, S; Chhikara, RS; Brooks, EG. (2008). Moderate increases in ambient PM2.5 and ozone are associated with lung function decreases in beach lifeguards. J Occup Environ Med 50: 202-211. http://dx.doi.org/10.1097/JOM.0b013e31816386b4.

Thurston, GD; Lippmann, M; Scott, MB; Fine, JM. (1997). Summertime haze air pollution and children with asthma. Am J Respir Crit Care Med 155: 654-660.

Tolbert, PE; Klein, M; Peel, JL; Sarnat, SE; Sarnat, JA. (2007). Multipollutant modeling issues in a study of ambient air quality and emergency department visits in Atlanta. J Expo Sci Environ Epidemiol 17: S29-S35. http://dx.doi.org/10.1038/sj.jes.7500625.

Torres, A; Utell, MJ; Morow, PE; Voter, KZ; Whitin, JC; Cox, C; Looney, RJ; Speers, DM; Tsai, Y; Frampton, MW. (1997). Airway inflammation in smokers and nonsmokers with varying responsiveness to ozone. Am J Respir Crit Care Med 156: 728-736.

Trenga, CA; Koenig, JQ; Williams, PV. (2001). Dietary antioxidants and ozone-induced bronchial hyperresponsiveness in adults with asthma. Arch Environ Occup Health 56: 242-249.

UNEP (United Nations Environment Programme). (2003). Millennium Ecosystem Assessment: Ecosystems and human well-being: A framework for assessment. Washington, DC: Island Press.

U.S. Department of Agriculture, U.S. Forest Service (2014). Tree basal area data, http://www.fs.fed.us/foresthealth/technology/nidrm2012.shtml.

U.S. Department of Agriculture, National Resources Conservation Service (2014), The PLANTS Database (http://plants.usda.gov, 2014), National Plant Data Center, Baton Rouge, LA.USDA Agricultural Research Service. (2012). Effects of Ozone Air Pollution on Plants. Available at http://www.ars.usda.gov/Main/docs.htm?docid=12462.

U.S. Department of Agriculture, U.S. Forest Service. (2014). Environmental Justice. Available at http://www.fs.fed.us/research/urban/environmental-justice.php.

U.S. DHEW (Department of Health, Education, and Welfare) (1970). Air Quality Criteria for Photochemical Oxidants. Washington, D.C.: National Air Pollution Control Administration; publication no. AP-63. Available from: NTIS, Springfield, VA; PB-190262/BA.

U.S. Environmental Protection Agency. (2014a). Health Risk and Exposure Assessment for Ozone. Office of Air Quality Planning and Standards, Research Triangle Park, NC. EPA-452/P-14-004a. Available at: http://www.epa.gov/ttn/naaqs/standards/ozone/s_o3_index.html.

U.S. Environmental Protection Agency. (2014b). Welfare Risk and Exposure Assessment for Ozone. Office of Air Quality Planning and Standards, Research Triangle Park, NC. EPA-452/P-14-005a. Available at: http://www.epa.gov/ttn/naaqs/standards/ozone/s_o3_index.html.

U.S. Environmental Protection Agency. (2014c). Policy Assessment for Ozone. Office of Air Quality Planning and Standards, Research Triangle Park, NC. EPA-452/R-14-006. Available at: http://www.epa.gov/ttn/naaqs/standards/ozone/s_o3_index.html.

U.S. Environmental Protection Agency. (2014d). Technology Transfer Network (TTN) Air Quality System (AQS). Available at http://www.epa.gov/ttn/airs/airsaqs.

U.S. Environmental Protection Agency. (2014e). Technology Transfer Network (TTN) Air Quality System (AQS). Download Detailed AQS Data. Available at http://www.epa.gov/ttn/airs/airsaqs/detaildata/downloadaqsdata.htm.

U.S. Environmental Protection Agency. (2014f). Air Trends: Design Values. Available at http://www.epa.gov/airtrends/values.html.

U.S. Environmental Protection Agency (2014g). List of Designated Reference and Equivalent Methods. U.S. Environmental Protection Agency, Office of Research and Development, Research Triangle Park, NC 27711. Available at: http://epa.gov/ttn/amtic/files/ambient/criteria/reference-equivalent-methods-list.pdf.

U.S. Environmental Protection Agency (2014h). Performance of the Proposed New Federal Reference Method for Measuring Ozone Concentrations in Ambient Air. U.S. Environmental Protection Agency, Office of Research and Development, Research Triangle Park, NC. EPA/600/R-14/432.

U.S. Environmental Protection Agency (2014i). Treatment of Data Influenced by Exceptional Events: Examples of Reviewed Exceptional Event Submissions. U.S. Environmental Protection Agency, Research Triangle Park, NC. Available at http://www.epa.gov/ttn/analysis/exevents.htm.

U.S. Environmental Protection Agency. (2014j) Policy Assessment for Ozone, Second External Review Draft. Office of Air Quality Planning and Standards, Research Triangle Park, NC. EPA-452/P–14–002.

U.S. Environmental Protection Agency (2013a). Integrated Science Assessment of Ozone and Related Photochemical Oxidants (Final Report). U.S. Environmental Protection Agency, Washington, DC. EPA/600/R-10/076F. Available at: http://www.epa.gov/ttn/naaqs/standards/ozone/s_o3_2008_isa.html.

U.S. Environmental Protection Agency (2013b). QA Handbook for Air Pollution Measurement Systems—Volume II. Ambient Air Quality Monitoring Program. U.S. Environmental Protection Agency, Office of Air Quality Planning and Standards, Research Triangle Park, NC 27711. EPA-454/B-13-003.

U.S. Environmental Protection Agency (2013c). Transfer Standards for Calibration of Ambient Air Monitoring Analyzers for Ozone. U.S. Environmental Protection Agency, Office of Air Quality Planning and Standards, Research Triangle Park, NC 27711. EPA-454/B-13-004.

U.S. Environmental Protection Agency (2012a). Integrated Science Assessment of Ozone and Related Photochemical Oxidants (Third External Review Draft). U.S. Environmental Protection Agency, Washington, DC, EPA/600/R-10/076C, 2012.

U.S. Environmental Protection Agency (2012b). Roadmap for Incorporating Energy Efficiency/Renewable Energy Policies and Programs into State and Tribal Implementation Plans. July 2012. Available: http://epa.gov/airquality/eere/manual.html.

U.S. Environmental Protection Agency (2011a). Integrated Science Assessment for Ozone and Related Photochemical Oxidants: First External Review Draft, U.S. Environmental Protection Agency, Washington, D.C., EPA/600/R-10/076A.

U.S. Environmental Protection Agency (2011b). Integrated Science Assessment of Ozone and Related Photochemical Oxidants (Second External Review Draft). U.S. Environmental Protection Agency, Washington, D.C., EPA/600/R-10/076B.

U.S. Environmental Protection Agency (2011c). Review of EPA's Photochemical Assessment Monitoring Stations (PAMS) Network Re-engineering Project. U.S. Environmental Protection Agency, Office of the Administrator Science Advisory Board, Washington DC. 20460. EPA-CASAC-11-010.

U.S. Environmental Protection Agency (2009a). Integrated Science Assessment for Particulate Matter (Final Report). U.S. Environmental Protection Agency, Washington, DC, EPA/600/R-08/139F, 2009.

U.S. Environmental Protection Agency (2009b). Assessment of the Impacts of Global Change on Regional U.S. Air Quality: A Synthesis of Climate Change Impacts on Ground Level-Ozone. An Interim Report of the U.S. EPA Global Change Research Program. U.S Environmental Protection Agency, Washington, DC. EPA/600/R–07/094.

U.S. Environmental Protection Agency (2009c). Guidance for Developing Transportation Conformity State Implementation plans (SIPs). January 2009. Available: http://www.epa.gov/otaq/stateresources/transconf/policy/420b09001.pdf.

U.S. Environmental Protection Agency (2007). Review of the National Ambient Air Quality Standards for Ozone: Policy Assessment of Scientific and Technical Information, OAQPS Staff Paper. EPA-452/R-07-007.

U.S. Environmental Protection Agency (2006a). Air Quality Criteria for Ozone and Related Photochemical Oxidants (2006 Final). U.S. Environmental Protection Agency, Washington, DC. EPA/600/R-05/004aF-cF. March 2006. Available at: http://www.epa.gov/ttn/naaqs/standards/ozone/s_o3_cr_cd.html.

U.S. Environmental Protection Agency (2006b). Ecological Benefits Assessment Strategic Plan. EPA-240-R-06-001. Office of Administrator, Washington, D.C. Available at http://yosemite.epa.gov/ee/epa/eed.nsf/webpages/ecologbenefitsplan.html.

U.S. Environmental Protection Agency (2005). Criteria for Assessing Whether an Ozone Nonattainment Area is Affected by Overwhelming Transport [Draft EPA Guidance]. U.S. Environmental Protection Agency, Research Triangle Park, NC. Draft June 2005. Available at http://www.epa.gov/scram001/guidance/guide/owt_guidance_07-13-05.pdf.

U.S. Environmental Protection Agency (1999). Compendium Method TO-11A, Determination of Formaldehyde in Ambient Air using Adsorbent Cartridge Followed by High Performance Liquid Chromatography (HPLC). U.S. Environmental Protection Agency, Office of Research and Development, Cincinnati, OH 45268. EPA/625/R-96/010b.

U.S. Environmental Protection Agency (1998). Technical Assistance Document (TAD) for Sampling and Analysis of Ozone Precursors. U.S. Environmental Protection Agency, Office of Research and Development, Research Triangle Park, NC 27711. EPA/600-R-98/161.

U.S. Environmental Protection Agency (1996a). Air quality criteria for ozone and related photochemical oxidants [EPA Report]. (EPA/600/P-93/004aF, cF). U.S. Environmental Protection Agency, Research Triangle Park, NC.

U.S. Environmental Protection Agency (1996b). Review of national ambient air quality standards for ozone: Assessment of scientific and technical information: OAQPS staff paper [EPA Report]. (EPA/452/R-96/007). Research Triangle Park, NC. http://www.ntis.gov/search/product.aspx?ABBR=PB96203435

U.S. Environmental Protection Agency (1992). Summary of selected new information on effects of ozone on health and vegetation: supplement to 1986 air quality criteria for ozone and other photochemical oxidants. Research Triangle Park, NC: Office of Health and Environmental Assessment, Environmental Criteria and Assessment Office; EPA report no. EPA/600/8-88/105F. Available from: NTIS, Springfield, VA; PB92-235670.

U.S. Environmental Protection Agency (1991). Criteria for Assessing the Role of Transported Ozone/Precursors in Ozone Nonattainment Areas. EPA-450/4-91-015. U.S. Environmental Protection Agency, Office of Air Quality Planning and Standards, Research Triangle Park, NC. May 1991.

U.S. Environmental Protection Agency (1989). Review of the National Ambient Air Quality Standards for Ozone: Policy Assessment of Scientific and Technical Information. OAQPS Staff Paper. Office of Air Quality Planning and Standards, Research Triangle Park, NC.

U.S. Environmental Protection Agency (1986). Air quality criteria for ozone and other photochemical oxidants [EPA Report]. (EPA-600/8-84-020aF - EPA-600/8-84-020eF). Research Triangle Park, NC. http://www.ntis.gov/search/product.aspx?ABBR=PB87142949.

U.S. Environmental Protection Agency (1978). Air quality criteria for ozone and other photochemical oxidants [EPA Report]. (EPA/600/8-78/004). Washington, D.C.

U.S. Forest Service, National Park Service, and U.S. Fish and Wildlife Service. (2010). Federal land managers' air quality related values work group (FLAG): phase I report—revised (2010). Natural Resource Report NPS/NRPC/NRR—2010/232. National Park Service, Denver, Colorado. http://www.nature.nps.gov/air/Pubs/pdf/flag/FLAG_2010.pdf.

U.S. National Park Service (U.S. NPS). (2003). Ozone Sensitive Plant Species on National Park Service and U.S. Fish and Wildlife Service Lands: Results of a June 24-25, 2003 Workshop. Baltimore, MD. Available at http://www.nature.nps.gov/air/pubs/pdf/baltfinalreport1.pdf

U.S. National Park Service (U.S. NPS). (2006). Ozone Sensitive Plant Species, by Park, November 2006. Available at http://www.nature.nps.gov/air/Permits/ARIS/docs/Ozone_Sensitive_ByPark_3600.pdf

Ulmer, C; Kopp, M; Ihorst, G; Frischer, T; Forster, J; Kuehr, J. (1997). Effects of ambient ozone exposures during the spring and summer of 1994 on pulmonary function of schoolchildren. Pediatr Pulmonol 23: 344-353. http://dx.doi.org/10.1002/(SICI)1099-0496(199705)23:5<344::AID-PPUL6>3.0.CO;2-K.

Vagaggini, B; Cianchetti, S; Bartoli, M; Ricci, M; Bacci, E; Dente, FL; Di Franco, A; Paggiaro, P. (2007). Prednisone blunts airway neutrophilic inflammatory response due to ozone exposure in asthmatic subjects. Respiration 74: 61-58. http://dx.doi.org/10.1159/000096078.

Vagaggini, B; Taccola, M; Clanchetti, S; Carnevali, S; Bartoli, ML; Bacci, E; Dente, FL; Di Franco, A; Giannini, D; Paggiaro, PL. (2002). Ozone exposure increases eosinophilic airway response induced by previous allergen challenge. Am J Respir Crit Care Med 166: 1073-1077.

Vagaggini, B; Taccola, M; Conti, I; Carnevali, S; Cianchetti, S; Bartoli, ML; Bacci, E; Dente, FL; Di Franco, A; Giannini, D; Paggiaro, PL. (2001). Budesonide reduces neutrophilic but not functional airway response to ozone in mild asthmatics. Am J Respir Crit Care Med 164: 2172-2176.

Vedal, S.; Brauer, M.; White, R.; Petkau, J. (2003). Air pollution and daily mortality in a city with low levels of pollution. Environ. Health Perspect. 111: 45–51.

Villeneuve, PJ; Chen, L; Rowe, BH; Coates, F. (2007). Outdoor air pollution and emergency department visits for asthma among children and adults: A case-crossover study in northern Alberta, Canada. Environ Health Global Access Sci Source 6: 40. http://dx.doi.org/10.1186/1476-069X-6-40.

Ward, DJ; Roberts, KT; Jones, N; Harrison, RM; Ayres, JG; Hussain, S; Walters, S. (2002). Effects of daily variation in outdoor particulates and ambient acid species in normal and asthmatic children. Thorax 57: 489-502. http://dx.doi.org/10.1136/thorax.57.6.489.

Wells, B. (2014a). Comparison of Ozone Metrics Considered in Current NAAQS Review. Memorandum to the Ozone NAAQS Review Docket, EPA-HQ-OAR-2008-0699.

Wells, B. (2014b). Analysis of Overlapping 8-hour Daily Maximum Ozone Concentrations. Memorandum to the Ozone NAAQS Review Docket, EPA-HQ-OAR-2008-0699.

Wittig, VE; Ainsworth, EA; Long, SP. (2007). To what extent do current and projected increases in surface ozone affect photosynthesis and stomatal conductance of trees? A meta-analytic review of the last 3 decades of experiments [Review]. Plant Cell Environ 30: 1150-1162. http://dx.doi.org/10.1111/j.1365-3040.2007.01717.x.

Wittig, VE; Ainsworth, EA; Naidu, SL; Karnosky, DF; Long, SP. (2009). Quantifying the impact of current and future tropospheric ozone on tree biomass, growth, physiology and biochemistry: A quantitative meta-analysis. Global Change Biol 15: 396-424. http://dx.doi.org/10.1111/j.1365-2486.2008.01774.x.

Wolff, G.T. (1995). Letter to EPA Administrator Carol Browner: "CASAC Closure on the Primary Standard Portion of the Staff Paper for Ozone," EPA-SAB-CASAC-LTR-96-002, November 30, 1995.

Wong, CM; Vichit-Vadakan, N; Vajanapoom, N; Ostro, B; Thach, TQ; Chau, PY; Chan, EK; Chung, RY; Ou, CQ; Yang, L; Peiris, JS; Thomas, GN; Lam, TH; Wong, TW; Hedley, AJ; Kan, H; Chen, B; Zhao, N; London, SJ; Song, G; Chen, G; Zhang, Y; Jiang, L; Qian, Z; He, Q; Lin, HM; Kong, L; Zhou, D; Liang, S; Zhu, Z; Liao, D; Liu, W; Bentley, CM; Dan, J; Wang, B; Yang, N; Xu, S; Gong, J; Wei, H; Sun, H; Qin, Z. (2010). Part 5. Public health and air pollution in Asia (PAPA): A combined analysis of four studies of air pollution and mortality. In Public Health and Air Pollution in Asia (PAPA): Coordinated Studies of Short-Term Exposure to Air Pollution and Daily Mortality in Four Cities (pp. 377-418). Boston, MA: Health Effects Institute. http://pubs.healtheffects.org/view.php?id=348.

Wong, CM; Yang, L; Thach, TQ; Chau, PY; Chan, KP; Thomas, GN; Lam, TH; Wong, TW; Hedley, AJ; Peiris, JS. (2009). Modification by influenza on health effects of air pollution in Hong Kong. Environ Health Perspect 117: 248-253. http://dx.doi.org/10.1289/ehp.11605.

Woodwell, D. A.; Cherry, D. K. (2004). National Ambulatory Medical Care Survey: 2002 summary. Hyattsville, MD: National Center for Health Statistics; DHHS publication no. (PHS) 2004-1250. (Advance data from vital and health statistics; no. 346). Available: http://www.cdc.gov/nchs/data/ad/ad346.pdf [3 August, 2005].

Xia, Y; Tong, H. (2006). Cumulative effects of air pollution on public health. Stat Med 25: 3548-3559. http://dx.doi.org/10.1002/sim.2446.

Zanobetti, A; Schwartz, J. (2011). Ozone and survival in four cohorts with potentially predisposing diseases. Am J Respir Crit Care Med 184: 836-841. http://dx.doi.org/10.1164/rccm.201102-0227OC.

Zanobetti, A; Schwartz, J. (2008a). Is there adaptation in the ozone mortality relationship: A multi-city case-crossover analysis. Environ Health 7: 22. http://dx.doi.org/10.1186/1476-069X-7-22.

Zanobetti, A; Schwartz, J. (2008b). Mortality displacement in the association of ozone with mortality: An analysis of 48 cities in the United States. Am J Respir Crit Care Med 177: 184-189. http://dx.doi.org/10.1164/rccm.200706-823OC.

Zanobetti, A; Schwartz, J. (2006). Air pollution and emergency admissions in Boston, MA. J Epidemiol Community Health 60: 890-895. http://dx.doi.org/10.1136/jech.2005.039834.

List of Subjects

40 CFR Part 50

Environmental protection, Air pollution control, Carbon monoxide, Lead, Nitrogen dioxide, Ozone, Particulate matter, Sulfur oxides.

40 CFR Part 51

Environmental protection, Administrative practices and procedures, Air pollution control, Intergovernmental relations.

40 CFR Part 52

Environmental Protection, Administrative practices and procedures, Air pollution control, Incorporation by reference, Intergovernmental relations.

40 CFR Part 53

Environmental protection, Administrative practice and procedure, Air pollution control, Reporting and recordkeeping requirements.

40 CFR Part 58

Environmental protection, Administrative practice and procedure, Air pollution control, Intergovernmental relations, Reporting and recordkeeping requirements

Dated: November 25, 2014.

Gina McCarthy,
Administrator.

For the reasons set forth in the preamble, chapter I of title 40 of the Code of Federal Regulations is proposed to be amended as follows:

PART 50 – NATIONAL PRIMARY AND SECONDARY AMBIENT AIR QUALITY STANDARDS

1. The authority citation for part 50 continues to read as follows:

Authority: 42 U.S.C. 7401 et seq.

2. Amend §50.14 by:

a. Revising paragraph (c)(2)(iii);

b. Removing and reserving paragraphs (c)(2)(iv) and (v);

c. Revising paragraph (c)(2)(vi) introductory text and Table 1;

d. Revising paragraph (c)(3)(i); and

e. Removing and reserving paragraphs (c)(3)(ii) and (iii);

3. The revisions read as follows:

§ 50.14 Treatment of air quality monitoring data influenced by exceptional events.

* * * * *

(c) ***

(2) ***

(iii) Flags placed on data as being due to an exceptional event together with an initial description of the event shall be submitted to EPA not later than July 1st of the calendar year following the year in which the flagged measurement occurred, except as allowed under paragraph (c)(2)(vi) of this section.

* * * * *

(vi) Table 1 identifies the data submission process for new or revised NAAQS, beginning with the 2015 Ozone NAAQS. This process shall apply to those data that will or may influence the

initial designation of areas for any new or revised NAAQS.

Table 1. Schedule for Exceptional Event Flagging and Documentation Submission for Data to be Used in Initial Area Designations

Exceptional Event / Regulatory Action	Exceptional Event Deadline Schedule[d]
Exceptional event data flagging and initial description deadline for data years 1, 2 and 3.[a]	If state and tribal recommendations for the new/revised NAAQS are due August through January, then the flagging and initial description deadline will be the July 1 prior to the recommendation deadline. If state and tribal recommendations for the new/revised NAAQS are due February through July, then the flagging and initial description deadline will be the January 1 prior to the recommendation deadline.
Exceptional event demonstration submittal deadline for data years 1, 2 and 3.[a]	No later than the date that state and tribal recommendations are due to EPA.
Exceptional event data flagging, initial description, and exceptional event demonstration submittal deadline for data year 4[b] and potential data year 5.[c]	By the last day of the month that is 1 year and 7 months after promulgation of a new or revised NAAQS, unless either option a or b applies. a. If the EPA follows a 3-year designation schedule, the deadline is 2 years and 7 months after promulgation of a new or revised NAAQS. b. If the EPA notifies the state/tribe via *Federal Register* notice, letter or guidance that it intends to complete the initial area designations process according to a schedule other than a 2-year or 3-year timeline, the deadline is 5 months prior to the date specified for final designations decisions in such EPA notification.

[a] Where data years 1, 2, and 3 are those years expected to be considered in state and tribal recommendations.

[b] Where data year 4 is the additional year of data that the EPA may consider when it makes final area designations for the new/revised NAAQS under a 2-year designations schedule.

[c] Where data year 5 is the additional year of data that the EPA may consider when it makes final

area designations for the new/revised NAAQS under an extended designations schedule.

[d] The date by which air agencies must certify their ambient air quality monitoring data in AQS is annually on May 1 of the year following the year of data collection. The EPA cannot require air agencies to certify data prior to this date. In some cases, however, air agencies may choose to certify a prior year's data in advance of May 1 of the following year, particularly if the EPA has indicated its intent to promulgate final designations in the months of May, June, July or August. Exceptional event flagging, initial description, and demonstration deadlines for "early certified" data will follow the deadlines for "year 4" and "year 5" data.

(3) Submission of demonstrations. (i) Except as allowed under paragraph (c)(2)(vi) of this section, a State that has flagged data as being due to an exceptional event and is requesting exclusion of the affected measurement data shall, after notice and opportunity for public comment, submit a demonstration to justify data exclusion to EPA not later than the lesser of, 3 years following the end of the calendar quarter in which the flagged concentration was recorded or, 12 months prior to the date that a regulatory decision must be made by EPA. A State must submit the public comments it received along with its demonstration to EPA.

*****

3. Section 50.19 is added to read as follows:

§ 50.19 National primary and secondary ambient air quality standards for ozone.

(a) The level of the national 8-hour primary ambient air quality standard for ozone (O_3) is (0.065-0.070) parts per million (ppm), daily maximum 8-hour average, measured by a reference method based on appendix D to this part and designated in accordance with part 53 of this chapter or an equivalent method designated in accordance with part 53 of this chapter.

(b) The 8-hour primary O_3 ambient air quality standard is met at an ambient air quality monitoring site when the 3-year average of the annual fourth-highest daily maximum 8-hour average O_3 concentration is less than or equal to (0.065-0.070) ppm, as determined in accordance with appendix U to this part.

(c) The level of the national secondary ambient air quality standard for O_3 is (0.065-0.070) ppm, daily maximum 8-hour average, measured by a reference method based on appendix D to this part and designated in accordance with part 53 of this chapter or an equivalent method designated in accordance with part 53 of this chapter.

(d) The 8-hour secondary O_3 ambient air quality standard is met at an ambient air quality monitoring site when the 3-year average of the annual fourth-highest daily maximum 8-hour average O_3 concentration is less than or equal to (0.065-0.070) ppm, as determined in accordance with appendix U to this part.

4. Revise appendix D to part 50 under subchapter C to read as follows:

APPENDIX D TO PART 50 — REFERENCE MEASUREMENT PRINCIPLE AND CALIBRATION PROCEDURE FOR THE MEASUREMENT OF OZONE IN THE ATMOSPHERE (CHEMILUMINESCENCE METHOD)

1.0 Applicability.

1.1 This chemiluminescence method provides reference measurements of the concentration of ozone (O_3) in ambient air for determining compliance with the national primary and secondary ambient air quality standards for O_3 as specified in 40 CFR part 50. This automated method is applicable to the measurement of ambient O_3 concentrations using continuous (real-time) sampling and analysis. Additional quality assurance procedures and guidance are provided in 40 CFR part 58, appendix A, and in Reference 14.

2.0 Measurement Principle.

2.1 This reference method is based on continuous automated measurement of the intensity of the characteristic chemiluminescence released by the gas phase reaction of O_3 in sampled air with either ethylene (C_2H_4) or nitric oxide (NO) gas. An ambient air sample stream

and a specific flowing concentration of either C_2H_4 (ET-CL method) or NO (NO-CL method) are mixed in a measurement cell, where the resulting chemiluminescence is quantitatively measured by a sensitive photo-detector. References 8-11 describe the chemiluminescence measurement principle.

2.2 The measurement system is calibrated by referencing the instrumental chemiluminescence measurements to certified O_3 standard concentrations generated in a dynamic flow system and assayed by photometry to be traceable to a National Institute of Standards and Technology (NIST) standard reference photometer for O_3 (see Section 4, Calibration Procedure, below).

2.3 An analyzer implementing this measurement principle is shown schematically in Figure 1. Designs implementing this measurement principle must include: an appropriately designed mixing and measurement cell; a suitable quantitative photometric measurement system with adequate sensitivity and wave length specificity for O_3; a pump, flow control, and sample conditioning system for sampling and drying the ambient air and moving it into and through the measurement cell; a means to supply, meter, and mix a constant, flowing stream of either C_2H_4 or NO gas of fixed concentration with the sample air flow in the measurement cell; suitable electronic control and measurement processing capability; and other associated apparatus as may be necessary. The analyzer must be designed and constructed to provide accurate, repeatable, and continuous measurements of O_3 concentrations in ambient air, with measurement performance that meets the requirements specified in subpart B of part 53 of this chapter.

2.4 An analyzer implementing this measurement principle and calibration procedure will be considered a federal reference method (FRM) only if it has been designated as a reference method in accordance with part 53 of this chapter.

2.5 Sampling considerations. The use of a particle filter on the sample inlet line of a chemiluminescence O_3 FRM analyzer is required to prevent buildup of particulate matter in the measurement cell and inlet components. This filter must be changed weekly (or at least often as specified in the manufacturer's operation/instruction manual), and the sample inlet system used with the analyzer must be kept clean, to avoid loss of O_3 in the O_3 sample air prior to the concentration measurement.

3.0 Interferences.

3.1 Except as described in 3.2 below, the chemiluminescence measurement system is inherently free of significant interferences from other pollutant substances that may be present in ambient air.

3.2 A small sensitivity to variations in the humidity of the sample air is minimized by a sample air dryer. Potential loss of O_3 in the inlet air filter and in the air sample handling components of the analyzer and associated exterior air sampling components due to buildup of airborne particulate matter is minimized by filter replacement and cleaning of the other inlet components.

4.0 Calibration Procedure.

4.1 Principle. The calibration procedure is based on the photometric assay of O_3 concentrations in a dynamic flow system. The concentration of O_3 in an absorption cell is determined from a measurement of the amount of 254 nm light absorbed by the sample. This determination requires knowledge of (1) the absorption coefficient (α) of O_3 at 254 nm, (2) the optical path length (l) through the sample, (3) the transmittance of the sample at a nominal wavelength of 254 nm, and (4) the temperature (T) and pressure (P) of the sample. The transmittance is defined as the ratio I/I_0, where I is the intensity of light which passes through the

cell and is sensed by the detector when the cell contains an O_3 sample, and I_0 is the intensity of light which passes through the cell and is sensed by the detector when the cell contains zero air. It is assumed that all conditions of the system, except for the contents of the absorption cell, are identical during measurement of I and I_0. The quantities defined above are related by the Beer-Lambert absorption law,

$$\text{Transmitance} = \frac{I}{I_0} = e^{-\alpha c l} \qquad (1)$$

where:

α = absorption coefficient of O_3 at 254 nm = 308 ±4 atm−1 cm−1 at 0 °C and 760 torr,[1, 2, 3, 4, 5, 6, 7]

c = O_3 concentration in atmospheres, and

l = optical path length in cm.

A stable O_3 generator is used to produce O_3 concentrations over the required calibration concentration range. Each O_3 concentration is determined from the measurement of the transmittance (I/I_0) of the sample at 254 nm with a photometer of path length l and calculated from the equation,

$$c(\text{atm}) = -\frac{1}{\alpha l}\left(\ln\frac{I}{I_0}\right) \qquad (2a)$$

or

$$c(\text{ppm}) = -\frac{10^6}{\alpha l}\left(\ln\frac{I}{I_0}\right). \qquad (2b)$$

The calculated O_3 concentrations must be corrected for O_3 losses, which may occur in the photometer, and for the temperature and pressure of the sample.

4.2 Applicability. This procedure is applicable to the calibration of ambient air O_3 analyzers, either directly or by means of a transfer standard certified by this procedure. Transfer standards must meet the requirements and specifications set forth in Reference 12.

4.3 Apparatus. A complete UV calibration system consists of an O_3 generator, an output port or manifold, a photometer, an appropriate source of zero air, and other components as necessary. The configuration must provide a stable O_3 concentration at the system output and allow the photometer to accurately assay the output concentration to the precision specified for the photometer (4.3.1). Figure 2 shows a commonly used configuration and serves to illustrate the calibration procedure, which follows. Other configurations may require appropriate variations in the procedural steps. All connections between components in the calibration system downstream of the O_3 generator must be of glass, Teflon, or other relatively inert materials. Additional information regarding the assembly of a UV photometric calibration apparatus is given in Reference 13. For certification of transfer standards which provide their own source of O_3, the transfer standard may replace the O_3 generator and possibly other components shown in Figure 2; see Reference 12 for guidance.

4.3.1 UV photometer. The photometer consists of a low-pressure mercury discharge lamp, (optional) collimation optics, an absorption cell, a detector, and signal-processing electronics, as illustrated in Figure 2. It must be capable of measuring the transmittance, I/I_0, at a wavelength of 254 nm with sufficient precision such that the standard deviation of the concentration measurements does not exceed the greater of 0.005 ppm or 3% of the concentration. Because the low-pressure mercury lamp radiates at several wavelengths, the photometer must incorporate suitable means to assure that no O_3 is generated in the cell by the lamp, and that at least 99.5% of the radiation sensed by the detector is 254 nm radiation. (This

can be readily achieved by prudent selection of optical filter and detector response characteristics.) The length of the light path through the absorption cell must be known with an accuracy of at least 99.5%. In addition, the cell and associated plumbing must be designed to minimize loss of O_3 from contact with cell walls and gas handling components. See Reference 13 for additional information.

4.3.2 Air flow controllers. Air flow controllers are devices capable of regulating air flows as necessary to meet the output stability and photometer precision requirements.

4.3.3 Ozone generator. The ozone generator used must be capable of generating stable levels of O_3 over the required concentration range.

4.3.4 Output manifold. The output manifold must be constructed of glass, Teflon, or other relatively inert material, and should be of sufficient diameter to insure a negligible pressure drop at the photometer connection and other output ports. The system must have a vent designed to insure atmospheric pressure in the manifold and to prevent ambient air from entering the manifold.

4.3.5 Two-way valve. A manual or automatic two-way valve, or other means is used to switch the photometer flow between zero air and the O_3 concentration.

4.3.6 Temperature indicator. A device to indicate temperature must be used that is accurate to ±1 °C.

4.3.7 Barometer or pressure indicator. A device to indicate barometric pressure must be used that is accurate to ±2 torr.

4.4 Reagents.

4.4.1 Zero air. The zero air must be free of contaminants which would cause a detectable response from the O_3 analyzer, and it must be free of NO, C_2H_4, and other species which react

with O_3. A procedure for generating suitable zero air is given in Reference 13. As shown in Figure 2, the zero air supplied to the photometer cell for the I_0 reference measurement must be derived from the same source as the zero air used for generation of the O_3 concentration to be assayed (I measurement). When using the photometer to certify a transfer standard having its own source of O_3, see Reference 12 for guidance on meeting this requirement.

4.5 Procedure.

4.5.1 General operation. The calibration photometer must be dedicated exclusively to use as a calibration standard. It must always be used with clean, filtered calibration gases, and never used for ambient air sampling. A number of advantages are realized by locating the calibration photometer in a clean laboratory where it can be stationary, protected from the physical shock of transportation, operated by a responsible analyst, and used as a common standard for all field calibrations via transfer standards.

4.5.2 Preparation. Proper operation of the photometer is of critical importance to the accuracy of this procedure. Upon initial operation of the photometer, the following steps must be carried out with all quantitative results or indications recorded in a chronological record, either in tabular form or plotted on a graphical chart. As the performance and stability record of the photometer is established, the frequency of these steps may be reduced to be consistent with the documented stability of the photometer and the guidance provided in Reference 12.

4.5.2.1 Instruction manual. Carry out all set up and adjustment procedures or checks as described in the operation or instruction manual associated with the photometer.

4.5.2.2 System check. Check the photometer system for integrity, leaks, cleanliness, proper flow rates, etc. Service or replace filters and zero air scrubbers or other consumable materials, as necessary.

4.5.2.3 Linearity. Verify that the photometer manufacturer has adequately established that the linearity error of the photometer is less than 3%, or test the linearity by dilution as follows: Generate and assay an O_3 concentration near the upper range limit of the system or appropriate calibration scale for the instrument, then accurately dilute that concentration with zero air and re-assay it. Repeat at several different dilution ratios. Compare the assay of the original concentration with the assay of the diluted concentration divided by the dilution ratio, as follows

$$E = \frac{A_1 - A_2/R}{A_1} \times 100\% \qquad (3)$$

where:

E = linearity error, percent

A_1 = assay of the original concentration

A_2 = assay of the diluted concentration

R = dilution ratio = flow of original concentration divided by the total flow

The linearity error must be less than 5%. Since the accuracy of the measured flow-rates will affect the linearity error as measured this way, the test is not necessarily conclusive. Additional information on verifying linearity is contained in Reference 13.

4.5.2.4 Inter-comparison. The photometer must be inter-compared annually, either directly or via transfer standards, with a NIST standard reference photometer (SRP) or calibration photometers used by other agencies or laboratories.

4.5.2.5 Ozone losses. Some portion of the O_3 may be lost upon contact with the photometer cell walls and gas handling components. The magnitude of this loss must be determined and used to correct the calculated O_3 concentration. This loss must not exceed 5%. Some guidelines for quantitatively determining this loss are discussed in Reference 13.

4.5.3 Assay of O_3 concentrations. The operator must carry out the following steps to properly assay O_3 concentrations.

4.5.3.1 Allow the photometer system to warm up and stabilize.

4.5.3.2 Verify that the flow rate through the photometer absorption cell, F, allows the cell to be flushed in a reasonably short period of time (2 liter/min is a typical flow). The precision of the measurements is inversely related to the time required for flushing, since the photometer drift error increases with time.

4.5.3.3 Ensure that the flow rate into the output manifold is at least 1 liter/min greater than the total flow rate required by the photometer and any other flow demand connected to the manifold.

4.5.3.4 Ensure that the flow rate of zero air, Fz, is at least 1 liter/min greater than the flow rate required by the photometer.

4.5.3.5 With zero air flowing in the output manifold, actuate the two-way valve to allow the photometer to sample first the manifold zero air, then Fz. The two photometer readings must be equal ($I = I_0$).

NOTE: In some commercially available photometers, the operation of the two-way valve and various other operations in section 4.5.3 may be carried out automatically by the photometer.

4.5.3.6 Adjust the O_3 generator to produce an O_3 concentration as needed.

4.5.3.7 Actuate the two-way valve to allow the photometer to sample zero air until the absorption cell is thoroughly flushed and record the stable measured value of Io.

4.5.3.8 Actuate the two-way valve to allow the photometer to sample the O_3 concentration until the absorption cell is thoroughly flushed and record the stable measured value of I.

4.5.3.9 Record the temperature and pressure of the sample in the photometer absorption cell. (See Reference 13 for guidance.)

4.5.3.10 Calculate the O_3 concentration from equation 4. An average of several determinations will provide better precision.

$$[O_3]_{OUT} = \left(\frac{-1}{\alpha l}\ln\frac{I}{I_0}\right)\left(\frac{T}{273}\right)\left(\frac{760}{P}\right)\times\frac{10^6}{L} \qquad (4)$$

where:

$[O_3]_{OUT}$ = O_3 concentration, ppm

α = absorption coefficient of O_3 at 254 nm = 308 atm−1 cm−1 at 0° C and 760 torr

l = optical path length, cm

T = sample temperature, K

P = sample pressure, torr

L = correction factor for O_3 losses from 4.5.2.5 = (1−fraction of O_3 lost).

NOTE: Some commercial photometers may automatically evaluate all or part of equation 4. It is the operator's responsibility to verify that all of the information required for equation 4 is obtained, either automatically by the photometer or manually. For “automatic” photometers which evaluate the first term of equation 4 based on a linear approximation, a manual correction may be required, particularly at higher O_3 levels. See the photometer instruction manual and Reference 13 for guidance.

4.5.3.11 Obtain additional O_3 concentration standards as necessary by repeating steps 4.5.3.6 to 4.5.3.10 or by Option 1.

4.5.4 Certification of transfer standards. A transfer standard is certified by relating the output of the transfer standard to one or more O_3 calibration standards as determined according

to section 4.5.3. The exact procedure varies depending on the nature and design of the transfer standard. Consult Reference 12 for guidance.

4.5.5 Calibration of ozone analyzers. Ozone analyzers must be calibrated as follows, using O_3 standards obtained directly according to section 4.5.3 or by means of a certified transfer standard.

4.5.5.1 Allow sufficient time for the O_3 analyzer and the photometer or transfer standard to warm-up and stabilize.

4.5.5.2 Allow the O_3 analyzer to sample zero air until a stable response is obtained and then adjust the O_3 analyzer's zero control. Offsetting the analyzer's zero adjustment to +5% of scale is recommended to facilitate observing negative zero drift (if any). Record the stable zero air response as "Z".

4.5.5.3 Generate an O_3 concentration standard of approximately 80% of the desired upper range limit (URL) of the O_3 analyzer. Allow the O_3 analyzer to sample this O_3 concentration standard until a stable response is obtained.

4.5.5.4 Adjust the O_3 analyzer's span control to obtain the desired response equivalent to the calculated standard concentration. Record the O_3 concentration and the corresponding analyzer response. If substantial adjustment of the span control is necessary, recheck the zero and span adjustments by repeating steps 4.5.5.2 to 4.5.5.4.

4.5.5.5 Generate additional O_3 concentration standards (a minimum of 5 are recommended) over the calibration scale of the O_3 analyzer by adjusting the O_3 source or by Option 1. For each O_3 concentration standard, record the O_3 concentration and the corresponding analyzer response.

4.5.5.6 Plot the O_3 analyzer responses (vertical or Y-axis) versus the corresponding O_3 standard concentrations (horizontal or X-axis). Compute the linear regression slope and intercept and plot the regression line to verify that no point deviates from this line by more than 2 percent of the maximum concentration tested.

4.5.5.7 Option 1: The various O_3 concentrations required in steps 4.5.3.11 and 4.5.5.5 may be obtained by dilution of the O_3 concentration generated in steps 4.5.3.6 and 4.5.5.3. With this option, accurate flow measurements are required. The dynamic calibration system may be modified as shown in Figure 3 to allow for dilution air to be metered in downstream of the O_3 generator. A mixing chamber between the O_3 generator and the output manifold is also required. The flow rate through the O_3 generator (Fo) and the dilution air flow rate (FD) are measured with a flow or volume standard that is traceable to a NIST flow or volume calibration standard. Each O_3 concentration generated by dilution is calculated from:

$$[O_3]'_{OUT} = [O_3]_{OUT} \left(\frac{F_O}{F_O + F_D}\right) \qquad (5)$$

where:

$[O_3]'_{OUT}$ = diluted O_3 concentration, ppm

FO = flow rate through the O_3 generator, liter/min

FD = diluent air flow rate, liter/min

Note: Additional information on calibration and pollutant standards is provided in Section 12 of Reference 14.

5.0 Frequency of Calibration.

5.1 The frequency of calibration, as well as the number of points necessary to establish the calibration curve, and the frequency of other performance checking will vary by analyzer; however, the minimum frequency, acceptance criteria, and subsequent actions are specified in

Appendix D of Reference 14: Measurement Quality Objectives and Validation Templates. The user's quality control program shall provide guidelines for initial establishment of these variables and for subsequent alteration as operational experience is accumulated. Manufacturers of analyzers should include in their instruction/operation manuals information and guidance as to these variables and on other matters of operation, calibration, routine maintenance, and quality control.

6.0 References.

1. E.C.Y. Inn and Y. Tanaka, "Absorption coefficient of Ozone in the Ultraviolet and Visible Regions", J. Opt. Soc. Am., 43, 870 (1953).

2. A. G. Hearn, "Absorption of Ozone in the Ultraviolet and Visible Regions of the Spectrum", Proc. Phys. Soc. (London), 78, 932 (1961).

3. W. B. DeMore and O. Raper, "Hartley Band Extinction Coefficients of Ozone in the Gas Phase and in Liquid Nitrogen, Carbon Monoxide, and Argon", J. Phys. Chem., 68, 412 (1964).

4. M. Griggs, "Absorption Coefficients of Ozone in the Ultraviolet and Visible Regions", J. Chem. Phys., 49, 857 (1968).

5. K. H. Becker, U. Schurath, and H. Seitz, "Ozone Olefin Reactions in the Gas Phase. 1. Rate Constants and Activation Energies", Int'l Jour. of Chem. Kinetics, VI, 725 (1974).

6. M. A. A. Clyne and J. A. Coxom, "Kinetic Studies of Oxy-halogen Radical Systems", Proc. Roy. Soc., A303, 207 (1968).

7. J. W. Simons, R. J. Paur, H. A. Webster, and E. J. Bair, "Ozone Ultraviolet Photolysis. VI. The Ultraviolet Spectrum", J. Chem. Phys., 59, 1203 (1973).

8. Ollison, W.M.; Crow, W.; Spicer, C.W. “Field testing of new-technology ambient air ozone monitors.” J. Air Waste Manage. Assoc., 63 (7), 855-863 (2013).

9. Parrish, D.D.; Fehsenfeld, F.C. “Methods for gas-phase measurements of ozone, ozone precursors and aerosol precursors.” Atmos. Environ., 34 (12-14), 1921-1957(2000).

10. Ridley, B.A.; Grahek, F.E.; Walega, J.G. “A small, high-sensitivity, medium-response ozone detector suitable for measurements from light aircraft.” J. Atmos. Oceanic Technol., 9 (2), 142-148(1992).

11. Boylan, P., Helmig, D., and Park, J.H. “Characterization and mitigation of water vapor effects in the measurement of ozone by chemiluminescence with nitric oxide.” Atmos. Meas. Tech. 7, 1231-1244 (2014).

12. Transfer Standards for Calibration of Ambient Air Monitoring Analyzers for Ozone, EPA publication number EPA-454/B-13-004, October 2013. EPA, Office of Air Quality Planning and Standards, Research Triangle Park, NC 27711. [Available at www.epa.gov/ttnamti1/files/ambient/qaqc/OzoneTransferStandardGuidance.pdf.]

13. Technical Assistance Document for the Calibration of Ambient Ozone Monitors, EPA publication number EPA-600/4-79-057, September, 1979. [Available at www.epa.gov/ttnamti1/files/ambient/criteria/4-79-057.pdf.]

14. QA Handbook for Air Pollution Measurement Systems—Volume II. Ambient Air Quality Monitoring Program. EPA-454/B-13-003, May 2013. [Available at http://www.epa.gov/ttnamti1/files/ambient/pm25/qa/QA-Handbook-Vol-II.pdf.]

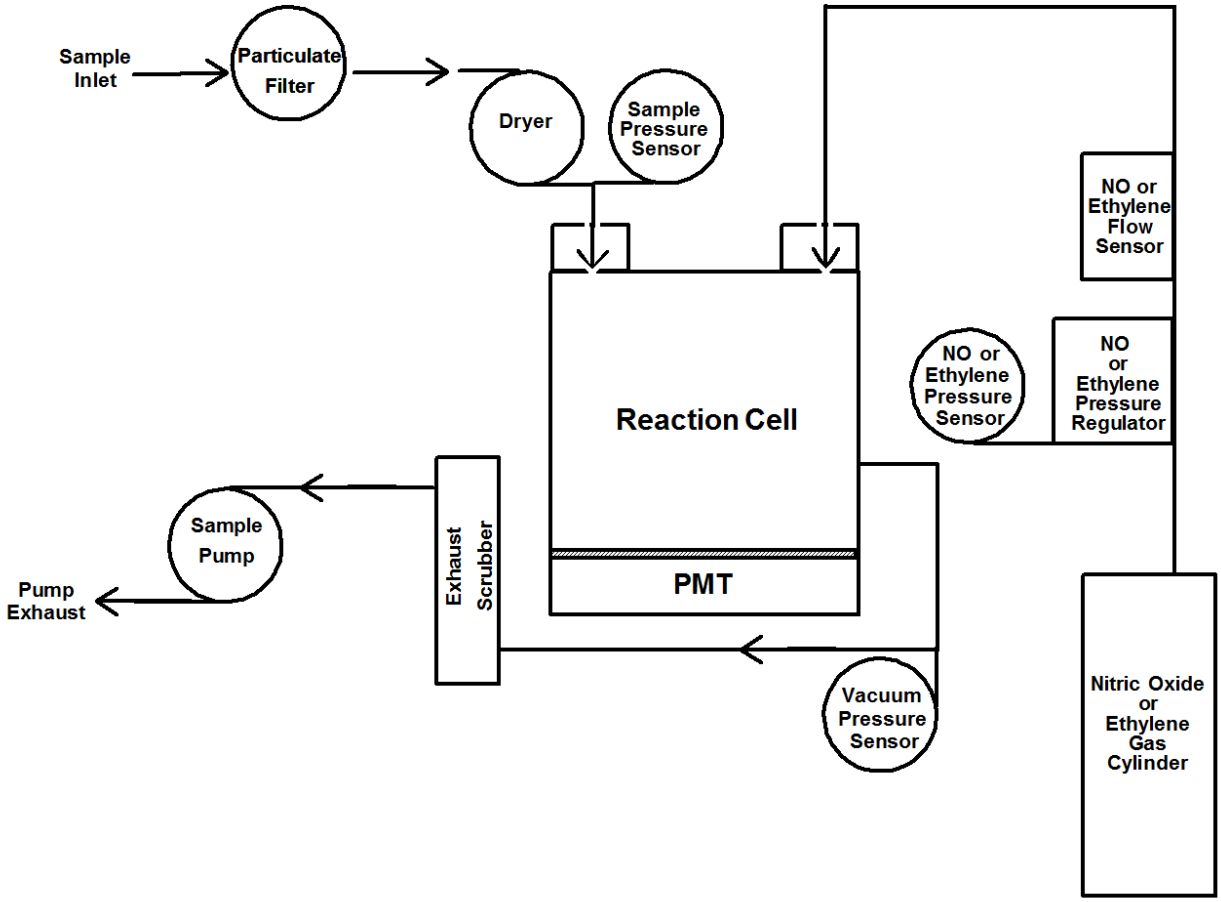

Figure 1. Gas-phase chemiluminescence analyzer schematic diagram, where PMT means photomultiplier tube.

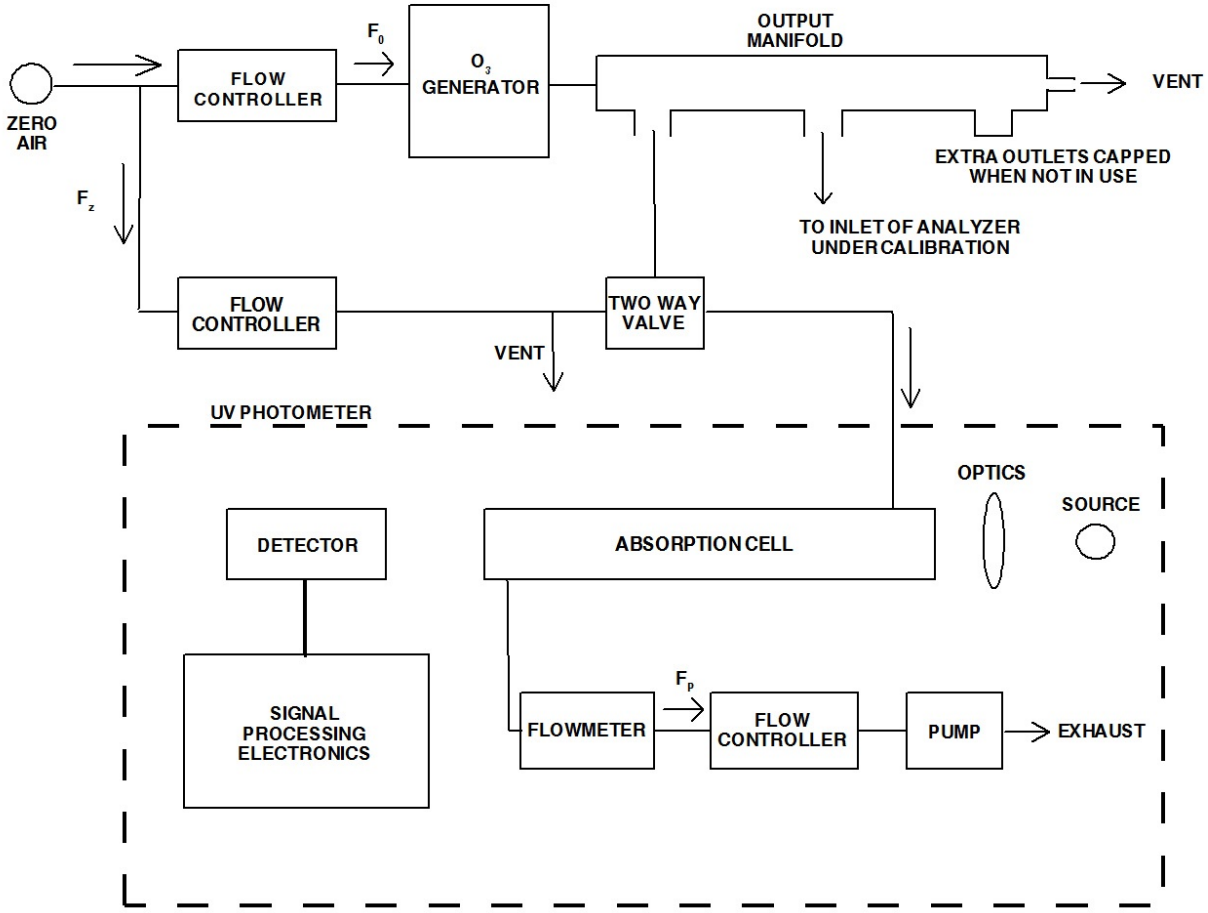

Figure 2. Schematic diagram of a typical UV photometric calibration system.

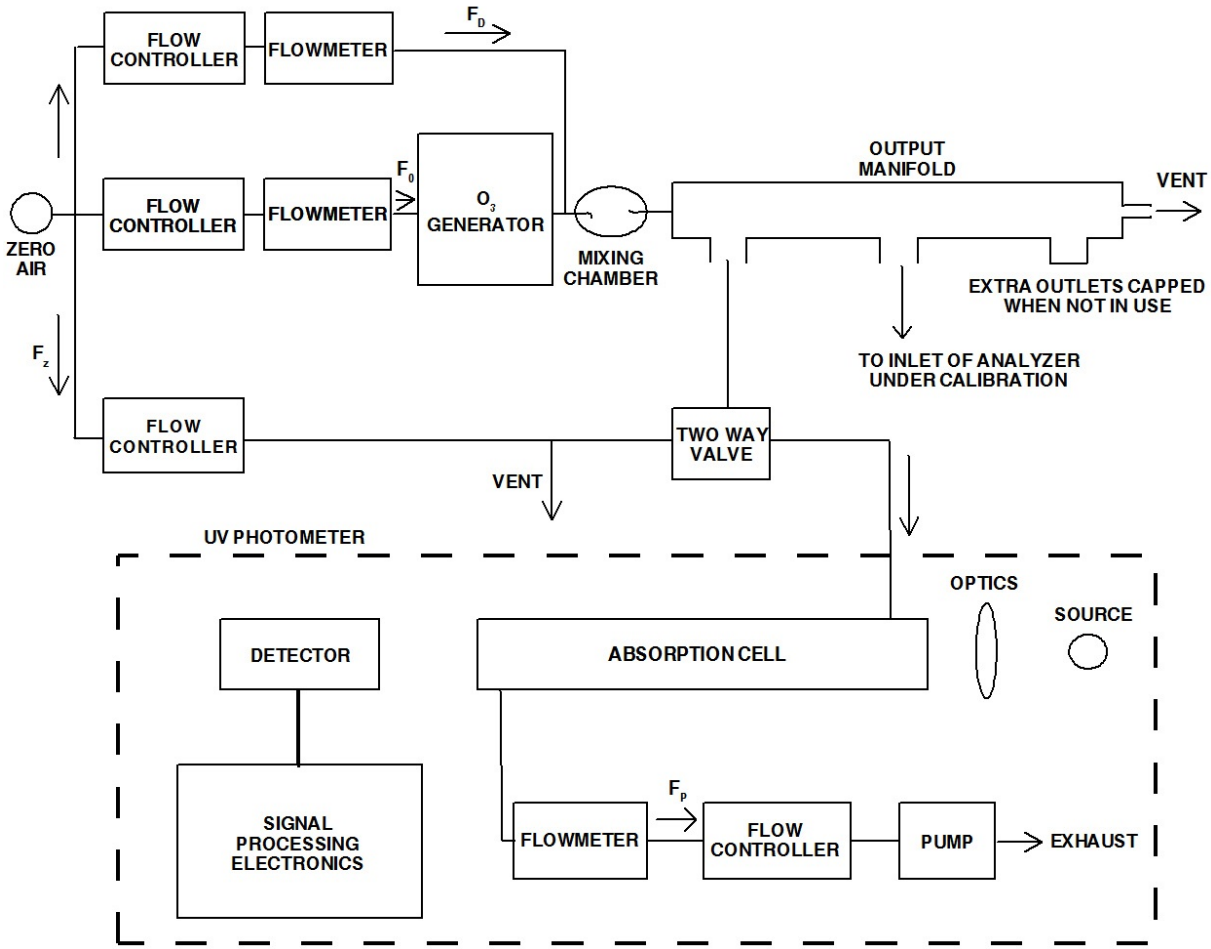

Figure 3. Schematic diagram of a typical UV photometric calibration system (Option 1).

5. Appendix U to Part 50 is added to read as follows:

Appendix U to Part 50 -- Interpretation of the Primary and Secondary National Ambient Air Quality Standards for Ozone

1. *General*

(a) This appendix explains the data handling conventions and computations necessary for determining whether the primary and secondary national ambient air quality standards (NAAQS) for ozone (O_3) specified in §50.19 are met at an ambient O_3 air quality monitoring site. Data reporting, data handling, and computation procedures to be used in making comparisons between

reported O_3 concentrations and the levels of the O_3 NAAQS are specified in the following sections.

(b) Whether to exclude or retain the data affected by exceptional events is determined by the requirements under §§50.1, 50.14 and 51.930.

(c) The terms used in this appendix are defined as follows:

8-hour average refers to the moving average of eight consecutive hourly O_3 concentrations measured at a site, as explained in section 3 of this appendix.

Annual fourth-highest daily maximum refers to the fourth highest value measured at a site during a particular year.

Collocated monitors refers to the instance of two or more O_3 monitors operating at the same site.

Daily maximum 8-hour average O_3 concentration refers to the maximum calculated 8-hour average value measured at a site on a particular day, as explained in section 3 of this appendix.

Design value refers to the metric (*i.e.*, statistic) that is used to compare ambient O_3 concentration data measured at a site to the NAAQS in order to determine compliance, as explained in section 4 of this appendix.

Minimum data completeness requirements refer to the amount of data that a site is required to collect in order to make a valid determination that the site is meeting the NAAQS.

Monitor refers to a physical instrument used to measure ambient O_3 concentrations.

O_3 *monitoring season* refers to the span of time within a year when individual states are required to measure ambient O_3 concentrations, as listed in Appendix D to part 58 of this chapter.

Site refers to an ambient O_3 air quality monitoring site.

Site data record refers to the set of hourly O_3 concentration data collected at a site for use in comparisons with the NAAQS.

Year refers to calendar year.

2. *Selection of Data for use in Comparisons with the Primary and Secondary Ozone NAAQS*

(a) All valid hourly O_3 concentration data collected using a federal reference method specified in Appendix D to this part, or an equivalent method designated in accordance with part 53 of this chapter, meeting all applicable requirements in part 58 of this chapter, and submitted to EPA's Air Quality System (AQS) database, or otherwise available to EPA, shall be used in design value calculations. Data not meeting these requirements shall not be used in design value calculations.

(b) All design value calculations shall be implemented on a site-level basis. If data are reported to EPA from collocated monitors, those data shall be combined into a single site data record as follows:

(i) The monitoring agency may designate one monitor as the primary monitor for the site. If a primary monitor has not been designated by the monitoring agency, the monitor with the largest number of hourly O_3 concentrations reported for the year shall be designated as the primary monitor.

(ii) Hourly O_3 concentration data from a collocated monitor shall be substituted into the site data record whenever a valid hourly O_3 concentration is not obtained from the primary monitor. In the event that hourly O_3 concentration data are available for two or more collocated monitors, the hourly concentration data for those monitors shall be averaged and substituted into the site data record.

(c) In certain circumstances, including but not limited to site closures or relocations, data from two nearby sites may be combined into a single site data record for the purpose of calculating a valid design value. The appropriate Regional Administrator may approve such combinations after taking into consideration factors such as distance between sites, spatial and temporal

patterns in air quality, local emissions and meteorology, jurisdictional boundaries, and terrain features.

3. *Data Reporting and Data Handling Conventions*

(a) Hourly average O_3 concentrations shall be reported in parts per million (ppm) to the third decimal place, with additional digits to the right of the third decimal place truncated. Each hour shall be identified using local standard time (LST).

(b) Moving 8-hour averages shall be computed from the hourly O_3 concentration data for each hour of the year and shall be stored in the first, or start, hour of the 8-hour period. An 8-hour average shall be considered valid if at least 6 of the hourly concentrations for the 8-hour period are available. In the event that only 6 or 7 hourly concentrations are available, the 8-hour average shall be computed on the basis of the hours available, using 6 or 7 as the divisor. In addition, in the event that 5 or fewer hourly concentrations are available, the 8-hour average shall be considered valid if, after substituting zero for the missing hourly concentrations, the resulting 8-hour average is greater than the level of the NAAQS. The 8-hour averages shall be reported to three decimal places, with additional digits to the right of the third decimal place truncated. Hourly O_3 concentrations that have been approved under §50.14 as having been affected by exceptional events shall be counted as missing or unavailable in the calculation of 8-hour averages.

(c) The daily maximum 8-hour average O_3 concentration for a given day is the highest of the 17 consecutive 8-hour averages beginning with the 8-hour period from 7:00 AM to 3:00 PM and ending with the 8-hour period from 11:00 PM to 7:00 AM (i.e., the 8-hour averages for 7:00 AM to 11:00 PM). Daily maximum 8-hour average O_3 concentrations shall be determined for each

day with ambient O_3 monitoring data, including days outside the O_3 monitoring season if those data are available.

(d) A daily maximum 8-hour average O_3 concentration shall be considered valid if valid 8-hour averages are available for at least 13 of the 17 consecutive 8-hour periods starting from 7:00 AM to 11:00 PM. In addition, in the event that fewer than 13 valid 8-hour averages are available, a daily maximum 8-hour average O_3 concentration shall also be considered valid if it is greater than the level of the NAAQS. Hourly O_3 concentrations that have been approved under §50.14 as having been affected by exceptional events shall be included when determining whether these criteria have been met.

(e) The primary and secondary O_3 design value statistic is the annual fourth-highest daily maximum 8-hour O_3 concentration, averaged over three years, expressed in parts per million. The fourth-highest daily maximum 8-hour O_3 concentration for each year shall be determined based only on days meeting the validity criteria in 3(d). The 3-year average shall be computed using the three most recent, consecutive years of ambient O_3 monitoring data. Design values shall be reported to three decimal places, with additional digits to the right of the third decimal place truncated.

4. *Comparisons with the Primary and Secondary Ozone NAAQS*

(a) The primary and secondary national ambient air quality standards for O_3 are met at an ambient air quality monitoring site when the 3-year average of the annual fourth-highest daily maximum 8-hour average O_3 concentration (i.e., the design value) is less than or equal to (0.065 – 0.070) ppm.

(b) A design value greater than the level of the NAAQS is always considered to be valid. A design value less than or equal to the level of the NAAQS must meet minimum data

completeness requirements in order to be considered valid. These requirements are met for a 3-year period at a site if valid daily maximum 8-hour average O_3 concentrations are available for at least 90% of the days within the O_3 monitoring season, on average, for the 3-year period, with a minimum of at least 75% of the days within the O_3 monitoring season in any one year.

(c) When computing whether the minimum data completeness requirements have been met, meteorological or ambient data may be sufficient to demonstrate that meteorological conditions on missing days were not conducive to concentrations above the level of the NAAQS. Missing days assumed less than the level of the NAAQS are counted for the purpose of meeting the minimum data completeness requirements, subject to the approval of the appropriate Regional Administrator.

(d) Comparisons with the primary and secondary O_3 NAAQS are demonstrated by examples 1 and 2 as follows:

Example 1: Site Meeting the Primary and Secondary O_3 NAAQS

Year	Percent valid days within O_3 monitoring season	1st highest daily max 8-hour O_3 (ppm)	2nd highest daily max 8-hour O_3 (ppm)	3rd highest daily max 8-hour O_3 (ppm)	4th highest daily max 8-hour O_3 (ppm)	5th highest daily max 8-hour O_3 (ppm)
2014	100	0.082	0.080	0.075	0.069	0.068
2015	96	0.074	0.073	0.065	0.062	0.060
2016	98	0.070	0.069	0.067	0.066	0.060
Average	98				0.065	

As shown in Example 1, this site meets the primary and secondary O_3 NAAQS because the 3-year average of the annual fourth-highest daily maximum 8-hour average O_3 concentrations (i.e.,

0.065666 ppm, truncated to 0.065 ppm) is less than or equal to (0.065 – 0.070) ppm. The minimum data completeness requirements are also met because the average percent of days within the O_3 monitoring season with valid ambient monitoring data is greater than 90%, and no single year has less than 75% data completeness.

Example 2: Site Failing to Meet the Primary and Secondary O3 O_3 NAAQS

Year	Percent valid days within O_3 monitoring season	1st highest daily max 8-hour O_3 (ppm)	2nd highest daily max 8-hour O_3 (ppm)	3rd highest daily max 8-hour O_3 (ppm)	4th highest daily max 8-hour O_3 (ppm)	5th highest daily max 8-hour O_3 (ppm)
2014	96	0.085	0.080	0.079	0.074	0.072
2015	74	0.084	0.083	0.072	0.071	0.068
2016	98	0.083	0.081	0.081	0.075	0.074
Average	89				0.073	

As shown in Example 2, this site fails to meet the primary and secondary O_3 NAAQS because the 3-year average of the annual fourth-highest daily maximum 8-hour average O_3 concentrations (i.e., 0.073333 ppm, truncated to 0.073 ppm) is greater than (0.065 – 0.070) ppm, even though the annual data completeness is less than 75% in one year and the 3-year average data completeness is less than 90%.

PART 51—REQUIREMENTS FOR PREPARATION, ADOPTION, AND SUBMITTAL OF IMPLEMENATION PLANS

6. The authority citation for part 51 continues to read as follows:

Authority: 23 U.S.C. 101; 42 U.S.C. 7401-7671q.

Subpart I——Review of New Sources and Modifications

7 Amend § 51.166 by adding paragraph (i)(11) to read as follows:

§ 51.166 Prevention of significant deterioration of air quality.

* * * * *

(i) * * *

(11) The plan may provide that the requirements of paragraph (k)(1) of this section shall not apply to a stationary source or modification with respect to the national ambient air quality standards for ozone in effect on [EFFECTIVE DATE OF FINAL RULE] if:

(i) The reviewing authority has determined a permit application subject to this section to be complete on or before [SIGNATURE DATE OF FINAL RULE]. Instead, the requirements in paragraph (k)(1) of this section shall apply with respect to the national ambient air quality standards for ozone in effect at the time the reviewing authority determined the permit application to be complete; or

(ii) The reviewing authority has first published before [EFFECTIVE DATE OF FINAL RULE] a public notice of a preliminary determination or draft permit for the permit application subject to this section. Instead, the requirements in paragraph (k)(1) of this section shall apply with respect to the national ambient air quality standards for ozone in effect at the time of first publication of a public notice of the preliminary determination or draft permit.

* * * * *

PART 52—APPROVAL AND PROMULGATION OF IMPLEMENTATION PLANS

8. The authority citation for part 52 continues to read as follows:

Authority: 42 U.S.C. 7401 *et seq*.

9. Amend § 52.21 by adding paragraph (i)(12) to read as follows:

§ 52.21 Prevention of significant deterioration of air quality.

* * * * *

(i) * * *

(12) The requirements of paragraph (k)(1) of this section shall not apply to a stationary source or modification with respect to the national ambient air quality standards for ozone in effect on [EFFECTIVE DATE OF FINAL RULE] if:

(i) The Administrator has determined a permit application subject to this section to be complete on or before [SIGNATURE DATE OF FINAL RULE]. Instead, the requirements in paragraph (k)(1) of this section shall apply with respect to the national ambient air quality standards for ozone in effect at the time the Administrator determined the permit application to be complete; or

(ii) The Administrator has first published before [EFFECTIVE DATE OF FINAL RULE] a public notice of a preliminary determination or draft permit subject to this section. Instead, the requirements in paragraph (k)(1) of this section shall apply with respect to the national ambient air quality standards for ozone in effect on the date the Administrator first published a public notice of a preliminary determination or draft permit.

* * * * *

PART 53—AMBIENT AIR MONITORING REFERENCE AND EQUIVALENT METHODS

10. The authority citation for part 53 continues to read as follows:

Authority: Sec. 301(a) of the Clean Air Act (42 U.S.C. sec. 1857g(a)), as amended by sec. 15(c)(2) of Pub. L. 91-604, 84 Stat. 1713, unless otherwise noted.

Subpart A — General Provisions

§ 53.9 [Amended]

11. Amend § 53.9 by removing paragraph (i).

12. Amend § 53.14 by revising paragraph (c) introductory text to read as follows:

§ 53.14 Modification of a reference or equivalent method.

* * * * *

(c) Within 90 calendar days after receiving a report under paragraph (a) of this section, the Administrator will take one or more of the following actions:

* * * * *

Subpart B—Procedures for Testing Performance Characteristics of Automated Methods for SO_2, CO, O_3, and NO_2

13. Amend § 53.23 by revising paragraph (e)(1)(vi) to read as follows:

§ 53.23 Test procedures.

* * * * *

(e) * * *

(1) * * *

(vi) Precision: Variation about the mean of repeated measurements of the same pollutant concentration, denoted as the standard deviation expressed as a percentage of the upper range limits.[282]

* * * * *

14. Revise Table B-1 to Subpart B of Part 53 to read as follows:

[282] NO_2 precision in Table B-1 is also changed to percent to agree with the calculation specified in 53.23(e)(10)(vi).

Table B-1 to Subpart B of Part 53—Performance Limit Specifications for Automated Methods

Performance parameter	Units[1]	SO_2		O_3		CO		NO_2 (Std. range)	Definitions and test procedures
		Std. range[3]	Lower range[2,3]	Std. range[3]	Lower range[2,3]	Std. range[3]	Lower range[2,3]		
1. Range	ppm	0-0.5	<0.5	0-0.5	<0.5	0-50	<50	0-0.5	Sec. 53.23(a).
2. Noise	ppm	0.001	0.0005	0.001	0.0005	0.2	0.1	0.005	Sec. 53.23(b).
3. Lower detectable limit	ppm	0.002	0.001	0.003	0.001	0.4	0.2	0.010	Sec. 53.23(c).
4. Interference equivalent Each interferent Total, all interferents	 ppm ppm	 ±0.005 ---	 4±0.005 ---	 ±0.005 ---	 ±0.005 ---	 ±1.0 ---	 ±0.5 ---	 ±0.02 0.04	 Sec. 53.23(d). Sec. 53.23(d).
5. Zero drift, 12 and 24 hour	ppm	±0.004	±0.002	±0.004	±0.002	±0.5	±0.3	±0.02	Sec. 53.23(e).
6. Span drift, 24 hour 20% of upper range limit 80% of upper range limit	 Percent Percent	 --- ±3.0	 --- ±3.0	 --- ±3.0	 --- ±3.0	 --- ±2.0	 --- ±2.0	 ±20.0 ±5.0	 Sec. 53.23(e) Sec. 53.23(e).
7. Lag time	Minutes	2	2	2	2	2.0	2.0	20	Sec. 53.23(e).
8. Rise time	Minutes	2	2	2	2	2.0	2.0	15	Sec. 53.23(e).
9. Fall time	Minutes	2	2	2	2	2.0	2.0	15	Sec. 53.23(e).
10. Precision 20 % of upper range limit 80 % of upper range limit	 Percent[5] Percent[5]	 --- 2 --- 2	 --- 2 --- 2	 --- 2 --- 2	 --- 2 --- 2	 -- 1.0 --- 1.0	 --- 1.0 --- 1.0	 4 6	 Sec. 53.23(e). Sec. 53.23(e). Sec. 53.23(e). Sec. 53.23(e).

[1.] To convert from parts per million (ppm) to μg/m^3 at 25 °C and 760 mm Hg, multiply by M/0.02447, where M is the molecular weight of the gas. Percent means percent of the upper measurement range limit.

[2.] Tests for interference equivalent and lag time do not need to be repeated for any lower range provided the test for the standard range shows that the lower range specification (if applicable) is met for each of these test parameters.
[3.] For candidate analyzers having automatic or adaptive time constants or smoothing filters, describe their functional nature, and describe and conduct suitable tests to demonstrate their function aspects and verify that performances for calibration, noise, lag, rise, fall times, and precision are within specifications under all applicable conditions. For candidate analyzers with operator-selectable time constants or smoothing filters, conduct calibration, noise, lag, rise, fall times, and precision tests at the highest and lowest settings that are to be included in the FRM or FEM designation.
[4.] For nitric oxide interference for the SO_2 UVF method, interference equivalent is ±0.0003 ppm for the lower range.
[5.] Standard deviation expressed as percent of the URL.

15. Revise table B-3 to subpart B of part 53 to read as follows:

Table B-3 to Subpart B of Part 53—Interferent Test Concentration,[1] Parts per Million

Pollutant	Analyzer type	Hydrochloric acid	Ammonia	Hydrogen sulfide	Sulfur dioxide	Nitrogen dioxide	Nitric oxide	Carbon dioxide	Ethylene	Ozone	m-Xylene	Water vapor	Carbon monoxide	Methane	Ethane	Naphthalene
SO_2	Ultraviolet fluorescence			[5]0.1	[4] 0.14	0.5	0.5			0.5	0.2	20,000				0.05
SO_2	Flame photometric			0.01	[4] 0.14			750				[3] 20,000	50			
SO_2	Gas chromatography			0.1	[4] 0.14			750				[3] 20,000	50			
SO_2	Spectrophotometric-wet chemical (pararosanaline)	0.2	0.1	0.1	[4] 0.14	0.5		750		0.5						
SO_2	Electrochemical	0.2	0.1	0.1	[4] 0.14	0.5	0.5		0.2	0.5		[3] 20,000				
SO_2	Conductivity	0.2	0.1		[4] 0.14	0.5		750								
SO_2	Spectrophotometric-gas phase, including DOAS				[4] 0.14	0.5				0.5	0.2					
O_3	Ethylene chemiluminescene			[3] 0.1				750		0.08		[3] 20,000				
O_3	NO-chemiluminescene			[3] 0.1		0.5		750		0.08		20,000				

O_3	Electrochemical		[3] 0.1		0.5	0.5				0.08						
O_3	Spectrophotometric-wet chemical (potassium iodide)		[3] 0.1		0.5	0.5	0.5			0.08						
O_3	Spectrophotometric-gas phase, including ultraviolet absorption and DOAS				0.5	0.5	0.5			0.08	0.02	20,000				
CO	Non-dispersive Infrared							750				20,000	[4] 10			
CO	Gas chromatography with flame ionization detector											20,000	[4] 10		0.5	
CO	Electrochemical						0.5		0.2			20,000	[4] 10			
CO	Catalytic combustion-thermal detection		0.1					750	0.2			20,000	[4] 10	5.0	0.5	
CO	IR fluorescence							750				20,000	[4] 10		0.5	
CO	Mercury replacement-UV photometric								0.2				[4] 10		0.5	
NO_2	Chemiluminescent		[3] 0.1		0.5	[4] 0.1	0.5					20,000				
NO_2	Spectrophotometric-wet chemical				0.5	[4] 0.1	0.5	750		0.5						

	(azo-dyereaction)															
NO_2	Electrochemical	0.2	[3] 0.1		0.5	[4] 0.1	0.5	750		0.5		20,000	50			
NO_2	Spectrophotometric-gas phase		[3] 0.1		0.5	[4] 0.1	0.5			0.5		20,000	50			

1. Concentrations of interferents listed must be prepared and controlled to ±10 percent of the stated value.
2. Analyzer types not listed will be considered by the Administrator as special cases.
3. Do not mix with the pollutant.
4. Concentration of pollutant used for test. These pollutant concentrations must be prepared to ±10 percent of the stated value.
5. If candidate method utilizes an elevated-temperature scrubber for removal of aromatic hydrocarbons, perform this interference test.
6. If naphthalene test concentration cannot be accurately quantified, remove the scrubber, use a test concentration that causes a full scale response, reattach the scrubber, and evaluate response for interference.

16. Amend appendix A to subpart B of part 53 by revising "Figure B-5" to read as follows:

Appendix A to Subpart B of Part 53—Optional Forms for Reporting Test Results

* * * * *

CALCULATION OF ZERO DRIFT, SPAN DRIFT, AND PRECISION

Applicant_____ Date_____

Analyzer_____ Pollutant_____

TEST PARAMETERS		CALCULATIONS	TEST DAY (n)														
			1	2	3	4	5	6	7	8	9	10	11	12	13	14	15
ZERO DRIFT	12 HOUR	$12ZD = C_{max} - C_{min}$															

	24 HOUR	$Z = (L_1 + L_2)/2$															
		$24ZD = Z_n - Z_{n-1}$															
		$24ZD = Z'_n - Z'_{n-1}$															
SPAN DRIFT	24 HOUR	$S_n = \frac{1}{6}\sum_{i=7}^{12} P_i$															
		$SD_n = \frac{S_n - S_{n-1}}{S_{n-1}} \times 100\%$															
		$SD_n = \frac{S_n - S'_{n-1}}{S'_{n-1}} \times 100\%$															
PREC-ISION	20% URL (P_{20})	P_{20} = % STANDARD DEVIATION OF (P_1…P_6)															
	80% URL (P_{80})	P_{80} = % STANDARD DEVIATION OF (P_7…P_{12})															

Figure B-5. Form for calculating zero drift, span drift, and precision (§ 53.23(e)).

* * * * *

Subpart C—Procedures for Determining Comparability Between Candidate Methods and Reference Methods

17. Amend §53.32 by revising paragraph (g)(1)(iii) to read as follows:

§53.32 Test procedures for methods for SO_2, CO, O_3, and NO_2.

* * * * *

(g) * * *

(1) * * *

(iii) The measurements shall be made in the sequence specified in table C-2 of this subpart.

* * * * *

Figure E-2 to Subpart E of Part 53 [Removed]

18. Amend subpart E by removing figure E-2 to subpart E of part 53.

PART 58—AMBIENT AIR QUALITY SURVEILLANCE

19. The authority citation for part 58 continues to read as follows:

AUTHORITY: 42 U.S.C. 7403, 7405, 7410, 7414, 7601, 7611, 7614, and 7619.

Subpart B—Monitoring Network

20. Amend §58.10 by adding paragraphs (a)(10) and (11) to read as follows:

§58.10 Annual monitoring network plan and periodic network assessment

(a) * * *

(10) The annual monitoring network plan shall provide for the required O_3 sites to be operating on the first day of the applicable required O_3 monitoring season in effect on January 1, 2017 as listed in Table D-3 of appendix D of this part.

(11) The annual monitoring network plan shall include the Enhanced Monitoring Plan (EMP) for areas designated as O_3 nonattainment, as required under 40 CFR part 58 Appendix D, section 5(f) beginning with the annual monitoring plans due on July 1, 2016.

* * * * *

21. Amend §58.13 by adding paragraphs (g) and (h) to read as follows:

§58.13 Monitoring network completion.

* * * * *

(g) The O_3 monitors required under appendix D, section 4.1 of this part must operate on the first day of the applicable required O_3 monitoring season in effect January 1, 2017.

(h) The Photochemical Assessment Monitoring sites required under 40 CFR part 58 Appendix D, section 5(a) must be physically established and operating under all of the requirements of this part, including the requirements of appendix A, C, D, and E of this part, no later than June 1, 2017, or two years following designation as O_3 nonattainment.

Subpart F—Air Quality Index Reporting

22. Amend § 58.50 by revising paragraph (c) to read as follows:

§ 58.50 Index reporting.

* * * * *

(c) The population of a metropolitan statistical area for purposes of index reporting is the latest available U.S. census population.

Subpart G—Federal Monitoring

23. Amend Appendix D to part 58, under section 4, by revising section 4.1(i) and Table D-3 to Appendix D of part 58 and by revising section 5 to read as follows:

Appendix D to part 58—Network Design Criteria for Ambient Air Quality Monitoring

* * * * *

4. POLLUTANT-SPECIFIC DESIGN CRITERIA FOR SLAMS SITES

4.1 Ozone (O_3) Design Criteria. * * *

(i) Since O_3 levels decrease significantly in the colder parts of the year in many areas, O_3 is required to be monitored at SLAMS monitoring sites only during the "ozone season" as described below in Table D–3 of this appendix. These ozone seasons are also identified in the AQS files on a state-by-state basis. Deviations from the O_3 monitoring season must be approved by the EPA Regional Administrator. These requests will be reviewed by Regional Administrators taking into consideration, at a minimum, the frequency of out-of-season O_3 NAAQS exceedances, as well as occurrences of the Moderate air quality index level and regional consistency. Any deviations based on the Regional Administrator's waiver of requirements must be described in the annual monitoring network plan and updated in AQS. Changes to the O_3 monitoring season requirements in Table D-3 revoke any previously approved Regional Administrator waivers for affected states. Requests for monitoring season waivers must be accompanied by relevant supporting information. Information on how to analyze O_3 data to support a change to the O_3 season in support of the 8-hour standard for a specific state can be found in reference 8 to this appendix. O_3 monitors at NCore stations are required to be operated year-round (January to December).

TABLE D-3[1] TO APPENDIX D OF PART 58. OZONE MONITORING SEASON BY STATE.

State	Begin Month	End Month
Alabama	March	October
Alaska	April	October

Arizona	January	December
Arkansas	March	November
California	January	December
Colorado	January	December
Connecticut	March	September
Delaware	March	October
District of Columbia	March	October
Florida	January	December
Georgia	March	October
Hawaii	January	December
Idaho	April	September
Illinois	March	October
Indiana	March	October
Iowa	March	October
Kansas	March	October
Kentucky	March	October
Louisiana (Northern) AQCR 019,022	March	October
Louisiana (Southern) AQCR 106	January	December
Maine	April	September
Maryland	March	October
Massachusetts	March	September
Michigan	March	October
Minnesota	March	October

Mississippi	March	October
Missouri	March	October
Montana	April	September
Nebraska	March	October
Nevada	January	December
New Hampshire	March	September
New Jersey	March	October
New Mexico	January	December
New York	March	October
North Carolina	March	October
North Dakota	March	September
Ohio	March	October
Oklahoma	March	November
Oregon	May	September
Pennsylvania	March	October
Puerto Rico	January	December
Rhode Island	March	September
South Carolina	March	October
South Dakota	March	October
Tennessee	March	October
Texas (Northern) AQCR 022, 210, 211, 212, 215, 217, 218	March	November
Texas (Southern) AQCR 106, 153, 213, 214, 216	January	December

Utah	January	December
Vermont	April	September
Virginia	March	October
Washington	May	September
West Virginia	March	October
Wisconsin	March	October 15
Wyoming	January	September
American Samoa	January	December
Guam	January	December
Virgin Islands	January	December
[1]The required O_3 monitoring season for NCore stations is January through December.		

* * * * *

5. NETWORK DESIGN FOR PHOTOCHEMICAL ASSESSMENT MONITORING STATIONS (PAMS) AND ENHANCED OZONE MONITORING

(a) State and local monitoring agencies are required to collect and report the following PAMS measurements at each NCore site required under paragraph 3(a) of this appendix located in an area designated as nonattainment for O_3.

(b) PAMS measurements include:

(1) Hourly averaged speciated volatile organic compounds (VOCs),

(2) 8 3-hour averaged carbonyls daily,

(3) Hourly averaged O_3,

(4) Hourly averaged nitrogen oxide (NO), nitrogen dioxide (NO_2), and total reactive nitrogen (NO_y),

(5) Hourly averaged 3 meter ambient temperature,

(6) Hourly vector-averaged 10 meter wind direction,

(7) Hourly averaged 10 meter wind speed,

(8) Hourly average atmospheric pressure,

(9) Hourly averaged relative humidity, and

(10) Hourly averaged mixing-height.

(c) The EPA Regional Administrator may grant a waiver to allow the collection of required PAMS measurements at an alternative location where the monitoring agency can demonstrate that the alternative location will provide representative data useful for regional or national scale modeling and the tracking of trends in O_3 precursors.

(d) The EPA Regional Administrator may also grant a waiver to allow representative meteorological data from nearby monitoring stations to be used to meet the requirements to collect temperature, wind direction, wind speed, atmospheric pressure, relative humidity, or hourly averaged mixing height where the monitoring agency can demonstrate the data is collected in a manner consistent with EPA quality requirements for these measurements.

(e) At a minimum, the monitoring agency shall collect the required PAMS measurements during the months of June, July, and August.

(f) States with O_3 nonattainment areas are required to develop and implement an Enhanced Monitoring Plan (EMP) detailing enhanced O_3 and O_3 precursor monitoring activities to be performed which is subject to review and approval by the EPA Regional Administrator. The EMP will include monitoring activities deemed important to understanding the O_3 problems in the state. Such activities may include, but are not limited to, the following:

(1) Additional O_3 monitors beyond the minimally required under paragraph 4.1 of this appendix,

(2) Additional NO_X or NO_y monitors beyond those required under 4.3 of this appendix,

(3) Additional speciated VOC measurements including data gathered during different periods other than required under paragraph 5(e) of this appendix, or locations other than those required under paragraph 5(a) of this appendix, and

(4) Enhanced upper air measurements of meteorology or pollution concentrations.

[FR Doc. 2014-28674 Filed 12/16/2014 at 8:45 am; Publication Date: 12/17/2014]