This document is scheduled to be published in the
Federal Register on 07/05/2012 and available online at
http://federalregister.gov/a/2012-15944, and on **FDsys.gov**

BILLING CODE 6717-01-P

DEPARTMENT OF ENERGY

FEDERAL ENERGY REGULATORY COMMISSION

18 CFR Part 40

Docket Nos. RM12-6-000 and RM12-7-000

Revisions to Electric Reliability Organization Definition of Bulk Electric System and Rules of Procedure

AGENCY: Federal Energy Regulatory Commission.

ACTION: Notice of Proposed Rulemaking.

SUMMARY: Under section 215 of the Federal Power Act, the Federal Energy Regulatory Commission (Commission) proposes to approve a modification to the currently-effective definition of "bulk electric system" developed by the North American Electric Reliability Corporation (NERC), the Commission-certified Electric Reliability Organization. The revised definition of "bulk electric system" removes language allowing for regional discretion in the currently-effective bulk electric system definition. The revised definition establishes a bright-line threshold that includes all facilities operated at or above 100 kV. The modified definition also identifies specific categories of facilities and configurations as inclusions and exclusions to provide clarity in the definition of "bulk electric system."

The Commission also proposes to approve: (1) NERC's contemporaneously filed revisions to its Rules of Procedure, which creates an exception procedure to add elements

to, or remove elements from, the definition of "bulk electric system" on a case-by-case basis; (2) NERC's proposed form entitled "Detailed Information to Support an Exception Request" that entities will use to support requests for exception from the "bulk electric system" definition; and (3) NERC's proposed implementation plan for the revised "bulk electric system" definition.

DATES: Comments are due [INSERT DATE 60 days after publication in the **FEDERAL REGISTER**]

ADDRESSES: Comments, identified by docket number, may be filed in the following ways:

- Electronic Filing through http://www.ferc.gov. Documents created electronically using word processing software should be filed in native applications or print-to-PDF format and not in a scanned format.
- Mail/Hand Delivery: Those unable to file electronically may mail or hand-deliver comments to: Federal Energy Regulatory Commission, Secretary of the Commission, 888 First Street, NE, Washington, DC 20426.

Instructions: For detailed instructions on submitting comments and additional information on the rulemaking process, see the Comment Procedures Section of this document.

FOR FURTHER INFORMATION CONTACT:

Susan Morris (Technical Information)
Office of Electric Reliability, Division of Reliability Standards
Federal Energy Regulatory Commission
888 First Street, NE
Washington, DC 20426
Telephone: (202) 502-6803

Nicholas Snyder (Technical Information)
Office of Electric Reliability, Division of Logistics & Security
Federal Energy Regulatory Commission
888 First Street, NE
Washington, DC 20426
Telephone: (202) 502-6408

Robert Stroh (Legal Information)
Office of the General Counsel
Federal Energy Regulatory Commission
888 First Street, NE
Washington, DC 20426
Telephone: (202) 502-8473

William Edwards (Legal Information)
Office of the General Counsel
Federal Energy Regulatory Commission
888 First Street, NE
Washington, DC 20426
Telephone: (202) 502-6669

SUPPLEMENTARY INFORMATION:

139 FERC ¶ 61,247
UNITED STATES OF AMERICA
FEDERAL ENERGY REGULATORY COMMISSION

Revisions to Electric Reliability Organization Definition of Bulk Electric System and Rules of Procedure	Docket Nos.	RM12-6-000 RM12-7-000

NOTICE OF PROPOSED RULEMAKING

(Issued June 22, 2012)

1. Under section 215 of the Federal Power Act (FPA),[1] the Federal Energy Regulatory Commission (Commission) proposes to approve a modification to the currently-effective definition of "bulk electric system" contained in NERC's *Glossary of Terms Used in Reliability Standards* (NERC Glossary) developed by the North American Electric Reliability Corporation (NERC), the Commission-certified Electric Reliability Organization. NERC submitted its petition in response to the Commission's directive in Order No. 743 that NERC develop a revised definition of "bulk electric system" using NERC's Reliability Standards development process.[2] The revised definition of bulk electric system:

[1] 16 U.S.C. § 824o (2006).

[2] *Revision to Electric Reliability Organization Definition of Bulk Electric System*, Order No. 743, 133 FERC ¶ 61,150, *order on reh'g*, Order No. 743-A, 134 FERC ¶ 61,210 (2011).

(a) removes the basis for regional discretion in the current bulk electric system definition;

(b) establishes a bright-line threshold so that the "bulk electric system" will be facilities operated at 100 kV or higher, if they are Transmission Elements, or connected at 100 kV or higher, if they are Real Power or Reactive Power resources; and

(c) contains specific inclusions (I1-I5) and exclusions (E1-E4) to provide clarity in the definition that the facilities described in these configurations are included in or excluded from the "bulk electric system."

2. The Commission also proposes to approve:

(a) NERC's contemporaneously filed revisions to its Rules of Procedure, which creates an exception procedure to add elements to, and remove elements from the definition of "bulk electric system" on a case-by-case basis;

(b) NERC's proposed form entitled "Detailed Information to Support an Exception Request" that entities will use to support requests for exceptions from the "bulk electric system" definition; and

(c) NERC's proposed implementation plan for the revised "bulk electric system" definition.

3. NERC's proposed revision to the definition of "bulk electric system" removes regional discretion and establishes a 100 kV bright-line threshold. Further, we believe that NERC's proposal offers additional clarity to the definition of bulk electric system by creating specific inclusions and exclusions within the definition, which provide

granularity with regard to common types of facilities and facility configurations and whether they are part of the bulk electric system.

4. We believe that the proposed "core" definition, including the inclusions and the exclusions, as well as the exception process should produce consistency in identifying bulk electric system elements across the reliability regions. In addition, it appears that NERC's proposed exception process to add elements to, and remove elements from, the definition of the bulk electric system adds transparency and uniformity to the process.

5. Although it is rare that the Commission would address Rules of Procedure changes in a rulemaking docket, we will do so in this instance because of the interplay between NERC's modified bulk electric system definition and the newly developed case-specific exception process set forth in NERC's proposed Rules of Procedure change. While we propose to approve NERC's petitions, we also seek comment from NERC and interested parties on certain aspects of NERC's petitions to understand the application of the proposed "core" definition, including the application of the inclusions and exclusions, and the proposed exception process to ensure consistent implementation.

I. Background

A. Section 215 of the FPA

6. Section 215 of the FPA requires a Commission-certified ERO to develop mandatory and enforceable Reliability Standards, subject to Commission review and approval. Once approved, the Reliability Standards may be enforced by the ERO, subject

to Commission oversight, or by the Commission independently.[3] The Commission established a process to select and certify an ERO[4] and, subsequently, certified NERC as the ERO.[5]

B. Order No. 693

7. On March 16, 2007, in Order No. 693, pursuant to section 215(d) of the FPA, the Commission approved 83 of 107 proposed Reliability Standards, six of the eight proposed regional differences, and the NERC Glossary, which includes NERC's definition of bulk electric system.[6] That definition provides:

> As defined by the Regional Reliability Organization, the electrical generation resources, transmission lines, interconnections with neighboring systems, and associated equipment, generally operated at voltages of 100 kV or higher. Radial transmission facilities serving only load with one transmission source are generally not included in this definition.[7]

---

[3] *See* 16 U.S.C. § 824o(e)(3) (2006).

[4] *Rules Concerning Certification of the Electric Reliability Organization; and Procedures for the Establishment, Approval and Enforcement of Electric Reliability Standards*, Order No. 672, FERC Stats. & Regs. ¶ 31,204, *order on reh'g*, Order No. 672-A, FERC Stats. & Regs. ¶ 31,212 (2006).

[5] *North American Electric Reliability Corp.*, 116 FERC ¶ 61,062, *order on reh'g and compliance*, 117 FERC ¶ 61,126 (2006) (certifying NERC as the ERO responsible for the development and enforcement of mandatory Reliability Standards), *aff'd sub nom. Alcoa Inc. v. FERC*, 564 F.3d 1342 (D.C. Cir. 2009).

[6] *See Mandatory Reliability Standards for the Bulk-Power System*, Order No. 693, FERC Stats. & Regs. ¶ 31,242, *order on reh'g*, Order No. 693-A, 120 FERC ¶ 61,053 (2007).

[7] Order No. 693, FERC Stats. & Regs. ¶ 31,242 at P 75 n.47 (quoting NERC's definition of "bulk electric system").

8. In approving NERC's definition of bulk electric system, the Commission stated that "at least for an initial period, the Commission will rely on the NERC definition of bulk electric system and NERC's registration process to provide as much certainty as possible regarding the applicability to and the responsibility of specific entities to comply with the Reliability Standards."[8] The Commission also stated that "[it] remains concerned about the need to address the potential for gaps in coverage of facilities."[9]

C. Order Nos. 743 and 743-A

9. On November 18, 2010, the Commission revisited the definition of "bulk electric system" in Order No. 743, which directed NERC, through NERC's Reliability Standards Development Process, to revise its definition of the term "bulk electric system" to ensure that the definition encompasses all facilities necessary for operating an interconnected transmission network. The Commission also directed NERC to address the Commission's technical and policy concerns. Among the concerns were inconsistency in application of the definition and a lack of oversight and exclusion of facilities from the bulk electric system that are required for the operation of the interconnected transmission network. In Order No. 743, the Commission stated that the best way to address these concerns is to eliminate the Regional Entity discretion to define bulk electric system

---

[8] *Id*. P 75; *see also* Order No. 693-A, 120 FERC ¶ 61,053 at P 19 ("the Commission will continue to rely on NERC's definition of bulk electric system, with the appropriate regional differences, and the registration process until the Commission determines in future proceedings the extent of the Bulk-Power System").

[9] Order No. 693, FERC Stats. & Regs. ¶ 31,242 at P 77 (footnotes omitted).

without NERC or Commission review, maintain a bright-line threshold that includes all facilities operated at or above 100 kV except defined radial facilities, and adopt an exemption process and criteria for removing from the bulk electric system facilities that are not necessary for operating the interconnected transmission network.[10] However, Order No. 743 did not require NERC to adopt these recommendations as the sole means to address the Commission's concerns. Instead, the Commission allowed NERC to "propose a different solution that is as effective as, or superior to, the Commission's proposed approach in addressing the Commission's technical and other concerns so as to ensure that all necessary facilities are included within the scope of the definition."[11] The Commission directed NERC to file the revised definition of bulk electric system and its process to exempt facilities from inclusion in the bulk electric system within one year following the effective date of the final rule.[12]

10. In Order No. 743-A the Commission reaffirmed its determinations in Order No. 743. In addition, the Commission clarified that the issue the Commission directed NERC to rectify was the discretion the Regional Entities have under the current definition to define the bulk electric system in their regions without any oversight from

---

[10] Order No. 743, 133 FERC ¶ 61,150 at P 16.

[11] *Id.*

[12] *Id.* P 113.

the Commission or NERC.[13] The Commission also clarified that it was not the Commission's intent through its determination regarding "impact-based methodologies" to disrupt the NERC Rules of Procedure or the Statement of Compliance Registry Criteria (Registry Criteria).[14] Nor did the Commission intend to rule out using any form of a material impact test that can be shown to identify facilities needed for reliable operation.[15] The Commission also clarified that the 100 kV threshold was a "first step or proxy" for determining which facilities should be included in the bulk electric system.[16]

11. The Commission further clarified that the statement in Order No. 743, "determining where the line between 'transmission' and 'local distribution' lies … should be part of the exemption process the ERO develops" was intended to grant discretion to NERC, as the entity with technical expertise, to develop criteria to determine how to differentiate between local distribution and transmission facilities in an objective, consistent, and transparent manner.[17] The Commission stated that the "seven factor test" adopted in Order No. 888 could be relevant and possibly is a logical starting point for determining which facilities are local distribution for reliability purposes.[18] However, the

---

[13] Order No. 743-A, 134 FERC ¶ 61,210 at P 11.

[14] *Id.* P 47.

[15] *Id.*

[16] *See* Order No. 743-A, 134 FERC ¶ 61,210 at PP 40, 67, 102-103.

[17] *Id.* P 68.

[18] *Id.* P 69.

Commission left it to NERC in the first instance to determine if and how the seven factor test should be considered in differentiating between local distribution and transmission facilities for purposes of determining whether a facility should be classified as part of the bulk electric system.[19] Order No. 743-A re-emphasized that local distribution facilities are excluded from the definition of Bulk-Power System and, therefore, must be excluded from the definition of bulk electric system.[20]

D. NERC's Petitions

12. On January 25, 2012, NERC submitted two petitions pursuant to the directives in Order No. 743: (1) NERC's proposed revision to the definition of "bulk electric system" which includes provisions to include and exclude facilities from the "core" definition and (2) revisions to NERC's Rules of Procedure to add a procedure creating an exception process to classify or de-classify a facility as part of the "bulk electric system." In this NOPR, we address both petitions.[21]

---

[19] *Id.* P 70.

[20] *Id.* PP 25, 58.

[21] "Exclusion" refers to configurations of elements NERC has identified within the revised definition of bulk electric system that should not be included in the bulk electric system. In contrast, an "exception" refers to an element that falls within the bulk electric system definition but is found not to be necessary for the operation of the grid through the proposed exception process, or an element that an element that falls outside of the bulk electric system definition but is found through the exception process should be part of the bulk electric system. Thus, an "exception" may result in adding elements to, or removing elements from, the definition of bulk electric system. Also, NERC uses the term "exception" rather than the term "exemption" used in Order No. 743. *See* Order No. 743, 133 FERC ¶ 61,150 at P 115.

1. Revised Definition of Bulk Electric System

13. In Docket No. RM12-06-000, NERC filed a petition requesting Commission approval of a revised definition of "bulk electric system" in the NERC Glossary (NERC BES Petition). As explained below, the definition consists of a "core" definition and a list of facilities configurations that will be included or excluded from the "core" definition. NERC also requests approval of the proposed "Detailed Information to Support an Exception Request" form as satisfying the requirement in Order No. 743 that NERC develop "technical criteria" to address exception requests.[22] Finally, NERC requests Commission approval of its plan for implementation of the revised definition of "bulk electric system."

a. "Core" Definition of Bulk Electric System

14. NERC proposes the following "core" definition of bulk electric system:

> Unless modified by the [inclusion and exclusion] lists shown below, all Transmission Elements operated at 100 kV or higher and Real Power and Reactive Power resources connected at 100 kV or higher. This does not include facilities used in the local distribution of electric energy.[23]

15. NERC states that the core definition eliminates regional discretion and establishes a clear, bright-line based on a 100 kV threshold. NERC states that the core definition

---

[22] The Detailed Information to Support an Exception Request is part of the exception process even though NERC filed it as part of the BES Petition. *See* NERC BES Petition at 25-26. Thus, the Commission will address the Detailed Information in the context of the NERC BES Petition rather than in the section of this NOPR addressing the exception procedure petition.

[23] *Id*. at 13.

places within the bulk electric system "all Transmission Elements operated at 100 kV or above, and all Real Power and Reactive Power resources connected at 100 kV or above," while establishing an express exclusion for facilities used in the local distribution of electrical energy.[24] NERC states that the revised definition deletes the phrase "[a]s defined by the Regional Reliability Organization" that is included in the current definition, eliminating the express basis for regional discretion.[25] NERC explains that the core definition includes the 100 kV criterion as a bright-line threshold, rather than as a general guideline, by eliminating the phrase "generally operated at" found in the current definition.[26]

16. NERC also explains that, while the current definition includes the phrase "associated equipment," and the revised definition does not, "associated equipment" is included in the revised definition by the use of the term "Transmission Elements" included in the revised core definition. NERC states that the NERC Glossary defines "Transmission" as "[a]n interconnected group of lines and associated equipment for the movement or transfer of electric energy between points of supply and points at which it is transformed for delivery to customers or is delivered to other electric systems;"[27] and

---

[24] *Id.* at 16. The current definition and Order No. 743 use the term "facility." NERC proposes to use the term "Element" as used in the NERC Glossary.

[25] *Id.* at 15.

[26] *Id.* at 16.

[27] *Id.* at 15 n.13.

defines "Elements" as, "[a]ny electrical device with terminals that may be connected to other electrical devices such as a generator, transformer, circuit breaker, bus section, or transmission line. An element may be comprised of one or more components."[28]

17. NERC states that the revised definition satisfies the Commission's directives and addresses the technical and policy concerns expressed in Order Nos. 743 and 743-A. According to NERC, the explicit basis of authority for Regional Entity discretion in the current definition is eliminated. In addition, NERC states that the core definition establishes specific threshold criteria rather than general guidelines of facilities operated or connected at or above 100 kV. Further, NERC states that the core definition in combination with the specific inclusions and exclusions provides a detailed set of criteria that can be applied on a uniform, consistent basis across all regions, eliminates ambiguity, and eliminates the potential for discretion and subjectivity in determining what facilities are part of or not part of the bulk electric system.

b. Inclusions and Exclusions to the Definition of Bulk Electric System

18. NERC states that, as part of the revised definition, NERC developed inclusions and exclusions to eliminate discretion in application of the revised "bulk electric system" definition. NERC states that the inclusions address five specific facilities configurations to provide clarity that the facilities described in these configurations are included in the

[28] *Id.*

bulk electric system (unless the facilities are excluded based on one of the specific exclusions).[29] The five inclusions are:

> **Inclusions:**
>
> **I1** - Transformers with the primary terminal and at least one secondary terminal operated at 100 kV or higher unless excluded under Exclusion E1 or E3.
>
> **I2** - Generating resource(s) with gross individual nameplate rating greater than 20 MVA or gross plant/facility aggregate nameplate rating greater than 75 MVA including the generator terminals through the high-side of the step-up transformer(s) connected at a voltage of 100 kV or above.
>
> **I3** - Blackstart Resources identified in the Transmission Operator's restoration plan.
>
> **I4** - Dispersed power producing resources with aggregate capacity greater than 75 MVA (gross aggregate nameplate rating) utilizing a system designed primarily for aggregating capacity, connected at a common point at a voltage of 100 kV or above.
>
> **I5** - Static or dynamic devices (excluding generators) dedicated to supplying or absorbing Reactive Power that are connected at 100 kV or higher, or through a dedicated transformer with a high-side voltage of 100 kV or higher, or through a transformer that is designated in Inclusion I1.

19. NERC explains that the facilities described in inclusions I1, I2, I4, and I5 are each operated or connected at or above 100 kV. NERC states that inclusion I3 encompasses blackstart resources identified in a transmission operator's restoration plan, which are necessary for the operation of the interconnection transmission system and should be

---

[29] *Id.* at 16.

included in the bulk electric system regardless of their size (MVA) or the voltage at which they are connected. NERC states that the inclusions will further reduce the potential for the exercise of discretion and subjectivity to exclude such configurations from the bulk electric system.

20. According to NERC, inclusion I1 includes transformers with the primary terminal and at least one secondary terminal operated at 100 kV or higher unless excluded under exclusion E1 or E3 (discussed later). NERC states that transformers operating at 100 kV or higher are part of the existing definition, but since transformers have windings operating at different voltages, and multiple windings in some circumstances, clarification was required to explicitly identify which transformers are included in the bulk electric system.

21. Inclusion I2 addresses generating resources with a gross individual nameplate rating greater than 20 MVA or a gross plant/facility aggregate nameplate rating greater than 75 MVA. According to NERC, inclusion I2 includes in the bulk electric system the generator terminals through the high-side of the step-up transformers connected at a voltage of 100 kV or above. NERC states that this inclusion mirrors the text of the NERC Registry Criteria (Appendix 5B of the NERC Rules of Procedure) for generating units.[30] NERC states that a "basic tenet that was followed in developing the [revised

[30] *Id.* at 17 (citing section III.c.1 and III.c.2 of Appendix 5B of the Rules of Procedure).

definition] was to avoid changes to Registrations…if such changes are not technically required for the [revised definition] to be complete."[31]

22. As noted above, inclusion I3 includes blackstart resources identified in the transmission operator's restoration plan in the bulk electric system.

23. Inclusion I4 includes dispersed power producing resources with gross aggregate capacity nameplate rating greater than 75 MVA which utilize a system designed primarily for aggregating capacity, connected at a common point at a voltage of 100 kV or above. NERC states that this inclusion was added to accommodate the effects of variable generation on the bulk electric system.

24. Inclusion I5 addresses static or dynamic devices (excluding generators) dedicated to supplying or absorbing reactive power that are connected at 100 kV or higher, or through a dedicated transformer with a high-side voltage of 100 kV or higher, or through a transformer that is designated in inclusion I1. NERC states that this inclusion is the technical equivalent of inclusion I2 for reactive power devices.

25. NERC states that the four exclusions identify facilities configurations that should not be included in the bulk electric system.[32] Generally, the exclusions address radial systems, behind-the-meter generation and local networks that distribute power to load. The four exclusions are:

---

[31] *Id.* at 17.

[32] *Id.* at 18.

Exclusions:

E1 - Radial systems: A group of contiguous transmission Elements that emanates from a single point of connection of 100 kV or higher and:

a) Only serves Load. Or,

b) Only includes generation resources, not identified in Inclusion I3, with an aggregate capacity less than or equal to 75 MVA (gross nameplate rating). Or,

c) Where the radial system serves Load and includes generation resources, not identified in Inclusion I3, with an aggregate capacity of non-retail generation less than or equal to 75 MVA (gross nameplate rating).

Note – A normally open switching device between radial systems, as depicted on prints or one-line diagrams for example, does not affect this exclusion.

E2 - A generating unit or multiple generating units on the customer's side of the retail meter that serve all or part of the retail Load with electric energy if: (i) the net capacity provided to the BES does not exceed 75 MVA, and (ii) standby, back-up, and maintenance power services are provided to the generating unit or multiple generating units or to the retail Load by a Balancing Authority, or provided pursuant to a binding obligation with a Generator Owner or Generator Operator, or under terms approved by the applicable regulatory authority.

E3 - Local networks (LN): A group of contiguous transmission Elements operated at or above 100 kV but less than 300 kV that distribute power to Load rather than transfer bulk-power across the interconnected system. LN's emanate from multiple points of connection at 100 kV or higher to improve the level of service to retail customer Load and not to accommodate bulk-power transfer across the interconnected system. The LN is characterized by all of the following:

a) Limits on connected generation: The LN and its underlying Elements do not include generation resources identified in Inclusion I3 and do not have an aggregate capacity of non-retail generation greater than 75 MVA (gross nameplate rating);

b) Power flows only into the LN and the LN does not transfer energy originating outside the LN for delivery through the LN; and

c) Not part of a Flowgate or transfer path: The LN does not contain a monitored Facility of a permanent Flowgate in the Eastern Interconnection, a major transfer path within the Western Interconnection, or a comparable monitored Facility in the ERCOT or Quebec Interconnections, and is not a monitored Facility included in an Interconnection Reliability Operating Limit (IROL).

E4 – Reactive Power devices owned and operated by the retail customer solely for its own use.
Note - Elements may be included or excluded on a case-by-case basis through the Rules of Procedure exception process.

26. Exclusion E1 provides detailed criteria for determining which facilities are properly excluded from the bulk electric system as radial facilities, which NERC states is intended to enhance the clarity of the radial facilities exclusion. NERC explains that criteria "b" and "c" of exclusion E1 identify the maximum amount of generation allowed on the radial facility while still qualifying for the radial facilities exclusion (aggregate capacity less than or equal to 75 MVA). NERC indicates that this exclusion addresses the circumstances of small utilities (including municipal utilities and cooperatives). According to NERC, "the maximum amount of generation allowed on the radial facility is sufficient to allow small utilities to continue to provide service options that support reliability of the interconnected transmission network, while not operating to exclude larger generators from the [bulk electric system]."[33] Further, NERC states, that the maximum amount of generation allowed on the radial facility per criteria "b" and "c" is

[33] *Id*. at 19.

consistent with the aggregate capacity threshold presently provided in the Registry Criteria for registration as a generator owner or generator operator (75 MVA gross nameplate rating).

27. With respect to the "normally open switch" note at the end of exclusion E1, NERC explains that this note is intended to address a common network configuration "in which two separate sets of facilities that, each standing alone, would be recognized as radial systems and not included in the bulk electric system are connected by a 'normally open switch' – *i.e.*, a switch that is set to the open position – for reliability purposes."[34] NERC states that a switch in this configuration is installed by entities to provide greater reliability to their end-use customers. According to NERC, scheduled maintenance activities on a radial line, or an unscheduled outage impacting the single point of supply to the radial line, could cause the disruption of power supply to the end-use customers served by the line, unless the entity has the ability to temporarily switch to another feed.[35] NERC states that the entity's operating procedures dictate how and when to operate such a normally open switch. NERC explains that an entity does not arbitrarily close the normally open switch placed in this configuration. Rather, the entity closes the "normally open" switch to maintain reliability of service to its end-use customers served

---

[34] *Id*.

[35] As explained below, the switch, though normally open, could be closed in such circumstances to allow the affected radial line to serve load by relying on another line through the closed switch.

from the affected radial line. NERC believes that facilities that otherwise meet the criteria for the radial system exclusion in exclusion E1 should not be included in the bulk electric system solely because the entity maintains a switch of this type, which is normally open, between sets of radial facilities. NERC states that for a set of radial facilities that are connected by a switch to qualify for the radial exclusion under exclusion E1, the switch must be identified as "normally open" on "source documents such as, prints or one-line diagrams and must in fact be normally set in the open position."[36]

28. NERC states that subjecting two sets of radial facilities that are normally unconnected to each other because the switch between them is open to the Reliability Standards during the limited time periods when the switch is closed for maintenance-related or outage-related circumstances would be fundamentally impractical and unworkable (from both the entity's perspective and the ERO's perspective).[37] NERC explains that this note will prevent numerous exception requests because this configuration is common.

29. According to NERC, exclusion E2 excludes a generating unit or units on the customer's side of the retail meter that serves all or part of the retail load subject to two conditions. First, the net capacity provided by the generating unit does not exceed 75 MVA. Second, standby, back-up, and maintenance power services are provided to the

---

[36] *Id*. at 20 n. 26. NERC provides other examples of source documents such as diagrams displayed within an energy management system or a SCADA system.

[37] *Id*. at 20-21.

generating unit or the retail load by a balancing authority, or pursuant to a binding obligation with a generator owner or generator operator, or under terms approved by the applicable regulatory authority. NERC states that these generating units are not necessary for the operation of the interconnected transmission network and, therefore, do not need to be included in the definition because they serve a single retail load, provide a limited amount of capacity to the bulk electric system, and are fully backed up by other resources.[38]

30. NERC explains that exclusion E3, the "local network" exclusion, encompasses local networks of transmission elements operated at between 100 kV and 300 kV "that distribute power to load rather than transfer bulk power across the interconnected system."[39] NERC explains that "[t]he purpose of local networks is to provide local distribution service, not to provide transfer capacity for the interconnected transmission network."[40] According to NERC, a network that supports distribution and does not accommodate bulk-power transfers across the interconnected system should not be included in the bulk electric system. NERC also states that the "detailed conditions established in exclusion E3 are sufficient to ensure that such qualifying local networks

[38] *Id*. at 21.

[39] *Id*. at 22.

[40] *Id*.

are being used exclusively for local distribution purposes."[41] NERC adds that facilities used for the local distribution of electric energy are expressly excluded from the bulk electric system by the core definition as well as by the local network exclusion.

31. Exclusion E4 encompasses reactive power devices owned and operated by a retail customer solely for its own use. NERC explains that exclusion E4 is the technical equivalent of exclusion E2 for reactive power devices.

c. Detailed Information to Support an Exception Request

32. In Order No. 743, the Commission directed NERC to develop a set of technical criteria to use in addressing requests for exceptions to the definition of the bulk electric system.[42] NERC states that it would be "more feasible to develop a common set of data and information that could be used by the Regional Entities and NERC to evaluate exception requests" than to develop the detailed criteria.[43] The Detailed Information Form contains the common set of data that entities seeking an exception must submit with every exception request. NERC indicates that the Detailed Information Form represents an equal and effective alternative approach to developing a substantive set of technical criteria for granting and rejecting exception requests required in Order

---

[41] *Id*. at 23. *See also id*. at Exh. G (Technical Justification Paper for "Local Network Exclusion") at 2 (LN Technical Paper).

[42] Order No. 743, 133 FERC ¶ 61,150 at P 115 (stating "NERC should develop an exemption process that includes clear, objective, transparent and uniformly applicable criteria for the exemption of facilities that are not necessary for operating the grid.").

[43] NERC BES Petition at 26.

No. 743.[44] Thus, NERC asks the Commission to approve the Detailed Information Form as satisfying the Commission's technical concerns expressed in Order No. 743 with respect to the need for criteria to approve or disapprove exception requests.

33. The Detailed Information Form specifies that all exception requests include a one-line breaker diagram identifying the element for which the exception is requested and data and studies to support the submittal. NERC states that the studies should be based on an Interconnection-wide base case to reflect the electrical characteristics and system topology. The studies should clearly document all assumptions used, address key performance measures of bulk electric system reliability through steady state power flow, and contain a transient stability analysis as necessary to support the entity's request. NERC notes that the applicant remains responsible for providing sufficient information and argument to justify the exception request.[45]

34. According to NERC, the information that an applicant may submit in support of an exception request is not limited to the Detailed Information Form. Rather, an applicant is expected to submit all relevant data, studies and other information that supports the exception request. Further, the Regional Entity and NERC may ask an applicant to provide other data and studies in addition to the Detailed Information Form.[46]

---

[44] *Id.* at 26, 32 (citing Order No. 743, 133 FERC ¶ 61,150 at P 115).

[45] *Id.* at 30.

[46] *Id.* at 27 n.32.

d. Proposed Implementation Plan for Revised Definition of "Bulk Electric System"

35. NERC requests that the revised definition "should be effective on the first day of the second calendar quarter after receiving applicable regulatory approval, or, in those jurisdictions where no regulatory approval is required, the revised [bulk electric system definition] should go into effect on the first day of the second calendar quarter after its adoption by the NERC Board.[47] The existing definition would be retired at midnight of the day immediately prior to the effective date of the revised definition in the jurisdiction in which the revised definition is becoming effective. NERC states that the proposed effective date is appropriate to provide a reasonable time between the date of regulatory approval, which is not under the control of NERC or the industry, and the effective date of the revised BES definition.[48]

36. NERC also requests that compliance obligations for all elements newly-identified to be included in the bulk electric system based on the revised definition should begin twenty-four months after the applicable effective date of the revised definition. NERC notes that the Commission stated in Order Nos. 743 and 743-A that the transition period should not exceed 18 months from the date of Commission approval of the revised definition, unless the Commission approved a longer transition period based on specific justification. NERC believes that a "somewhat longer transition period" is necessary in

[47] *Id.* at 34.

[48] *Id.*

light of the actions that will need to be completed in connection with the revised definition. NERC notes that in the United States, the proposed transition period will be between a minimum of approximately twenty-seven months and a maximum of thirty months from the date of Commission approval, depending on the date of Commission approval."[49] NERC states that sufficient time is needed: (1) to implement transition plans to accommodate any changes resulting from the revised definition; (2) for entities to file for exceptions, and for the Regional Entities and NERC to process those exceptions to a final determination, pursuant to the proposed exception process; and (3) for owners of facilities and elements that are newly-included in the bulk electric system based on the definition to train their personnel on compliance with the Reliability Standards applicable to the newly-included facilities and elements, so that these entities can achieve compliance with applicable Reliability Standards by the end of the transition period.

2. NERC Petition for Approval of Revisions to Rules of Procedure to Adopt a Bulk Electric System Exception Process

a. Changes to NERC's Rules of Procedure

37. In Docket No. RM12-7-000, NERC filed proposed revisions to its Rules of Procedure for the purpose of adopting a procedure for entities to obtain an exception from the definition of bulk electric system (NERC ROP Petition). NERC states that the proposed exception process, which is a mechanism to add elements to, and remove

[49] *Id.* at 35.

elements from, the bulk electric system, addresses the concerns raised in Order No. 743 with respect to the current processes for determining what facilities are part of the bulk electric system and what facilities are not.[50] NERC also states that the exception process "provides for decisions to approve or disapprove exception requests to be made by NERC, rather than by the Regional Entities, thereby eliminating the potential for inconsistency and subjectivity that the Commission was concerned [about, which] was created by having decisions as to what facilities are included in or excluded from the BES made at the Regional Entity level."[51] NERC proposes to add section 509 (Exceptions to the Definition of the Bulk Electric System), section 1703 (Challenges to NERC Determinations of BES Exception Requests) and Appendix 5C (Procedure for Requesting and Receiving an Exception to the NERC Definition of Bulk Electric System) to NERC's Rules of Procedure. The NERC ROP Petition also includes proposed conforming revisions to other Rules of Procedure, including revisions to sections 302.2, 501.1.4.4, 804, 1102.2, and 1701 and appendices 2, 3D, 4B, 5B, 6, and 8, which NERC states are necessary in light of the revised definition and the exception process.

Section 509 of the Rules of Procedure

38. NERC states that proposed section 509 establishes a procedure, which is contained in a new Appendix 5C to the Rules of Procedure, for an entity to request that an element

[50] NERC ROP Petition at 4.

[51] *Id.* (footnote omitted).

that falls outside of the definition of the bulk electric system be treated as part of the bulk electric system and for an entity to request that an element that falls within the definition of the bulk electric system not be treated as part of the bulk electric system:

> An Element is considered to be (or not be) part of the Bulk Electric System by applying the BES Definition to the Element (including the inclusions and exclusions set forth therein). Appendix 5C sets forth the procedures by which (i) an entity may request a determination that an Element that falls within the definition of Bulk Electric System should be exempted from being considered a part of the Bulk Electric System, or (ii) an entity may request that an Element that falls outside the definition of the Bulk Electric System should be considered a part of the Bulk Electric System.[52]

NERC explains that the exception process is "not intended to be used to resolve ambiguous situations," i.e. the exception process is only available after an initial determination has been made regarding whether an element is part of or not part of the bulk electric system through the application of the definition to the element.[53]

Appendix 5C to the Rules of Procedure

39. NERC explains that proposed Appendix 5C sets forth the detailed procedures for obtaining an exception to include an element in, or remove an element from, the bulk electric system.[54] The exception process involves three steps.[55] First, an entity applies the bulk electric system definition to a transmission element to determine its status. If the

---

[52] *Id.* at 10.

[53] *Id.* at 10-11.

[54] *Id.* at 11. *See* also section D.1.c above.

[55] *Id.* at 13-14.

entity believes that the element, contrary to its characterization based on the definition, should either be treated, or not be treated, as part of the bulk electric system, the entity may submit an exception request to the Regional Entity in which the element is located. Second, the Regional Entity screens the request to determine whether the application meets the filing criteria and, if so, reviews the application and makes a recommendation to NERC whether to approve or deny the request. Third, the NERC President decides whether to approve or deny the exception request after considering the opinion provided by a NERC review panel.[56] If the entity does not agree with the NERC President's decision, it may appeal the decision to the NERC Board of Trustees Compliance Committee (Compliance Committee) who is the final arbiter of the request.

40. According to NERC, if the Regional Entity denies the exception request based on the initial screening but the applicant believes the exception request is proper and complete, the applicant may appeal the rejection directly to NERC.

41. NERC explains that the proposed exception process will allow NERC to provide consistent determinations on exception requests submitted from different regions involving the same or similar facts and circumstances, and will allow NERC to take into account the aggregate impact on the bulk electric system of approving or disapproving all of the exception requests. Finally, the exception process includes provisions for reporting information that may alter the status of an approved exception, verifying whether an

[56] The panel will have at least three members. NERC ROP Petition at 14.

exception continues to be warranted, and revoking an exception that is no longer warranted.

42. The proposed exception process includes provisions for obtaining exceptions both for inclusion in and exclusion from the bulk electric system. NERC identifies the entities that are eligible to submit exception requests. Specifically, the owner of an element may submit a request to include the element in, or remove it from, the bulk electric system.[57] A Regional Entity, planning authority, reliability coordinator, transmission operator, transmission planner, or balancing authority that has (or will have upon inclusion in the bulk electric system) the elements covered by an exception request within its scope of responsibility may submit an exception request for the inclusion in the bulk electric system of an element or elements owned by a registered entity. NERC states that only a Regional Entity may submit an exception request for the inclusion in the bulk electric system of an element owned by an owner that is not a registered entity.

43. Finally, NERC states that an exception request will be subject to review to verify continuing justification for the exception.[58] According to NERC, the proposed exception process requires an entity to notify the Regional Entity and NERC within 90 days after

---

[57] Section 5C of NERC's Rules of Procedure defines "owner" as "the owner(s) of an [e]lement or [e]lements that is or may be determined to be part of the [bulk electric system] as a result of either the application of the [bulk electric system] [d]efinition or an [e]xception, or another entity, such as an operator, authorized to act on behalf of the owner of the [e]lement or [e]lements in the context of an [e]xception [r]equest."

[58] *Id.* at 34 and Att. 1 at 17.

learning of any change of condition which would affect the basis for approving the exception request. NERC will then review the information and determine whether to direct the Regional Entity to perform a substantive review to verify continuing justification and issue a recommendation to NERC.[59] NERC also states that an entity must certify every 36 months to the appropriate Regional Entity that the basis for the exception request remains valid. In addition, the proposed exception process states that if the Regional Entity obtains information through means other than the submitting entity that indicates an exception may no longer be warranted, the Regional Entity must provide NERC with the information. NERC will review the information and determine whether to direct the Regional Entity to perform a substantive review to verify continuing justification and issue a recommendation to NERC.[60]

44. NERC states that the exception process establishes a process that (1) balances the need for effective and efficient administration with due process and clarity of expectations; (2) promotes consistency in determinations and eliminates Regional discretion by having all decisions on Exception Requests made at NERC; (3) provides for involvement of persons with applicable technical expertise in making decisions on ception Requests; and (4) should alleviate concerns about a "one-size-fits-all" approach.[61]

---

[59] *Id.* at 34-35 and Att. 1 at 17.

[60] *Id.* at 35 and Att. 1 at 17.

[61] *Id.* at 17.

Section 1703 of the Rules of Procedure

45. NERC has also proposed to modify its Rules of Procedure to add a procedure for an entity to challenge the NERC decision on an exception request. The entity must file the challenge with the Compliance Committee within 30 days of the date of the NERC decision. The Compliance Committee must issue its decision within 90 days after the submission of the challenge, which the Compliance Committee may extend. NERC states that the Compliance Committee decision will be the final NERC decision on the exception request. In addition, the entity may appeal the final NERC decision to the Commission within 30 days following the date of the Compliance Committee's decision, or within such time period as the Commission's legal authority permits.

b. NERC's List of Facilities Granted Exceptions

46. In Order No. 743, the Commission stated that NERC should maintain a list of exempted facilities that can be made available to the Commission upon request.[62] NERC states that the proposed exception process does not include provisions for NERC to maintain a list of facilities that have received exceptions, as requested in Order No. 743, as this is an internal administrative matter for NERC to implement that does not need to be embedded in the Rules of Procedure.[63] NERC states it will develop a specific internal plan and procedures for maintaining a list of facilities for which exceptions have been granted.

---

[62] Order No. 743, 133 FERC ¶ 61,150 at P 117.

[63] NERC ROP Petition at 49.

47. NERC also notes that Regional Entities will maintain lists of elements within their regions for which exceptions have been granted, in order to monitor compliance with the requirement to submit periodic certifications pursuant to section 11.3 of Appendix 5C.[64]

II. Discussion

48. Pursuant to section 215(d) of the FPA we propose to approve NERC's revised definition of bulk electric system, including the specific inclusions and exclusions set forth in the definition, as just, reasonable, not unduly discriminatory or preferential, and in the public interest. As discussed below, we believe that NERC's proposal satisfies the directives of Order No. 743 to develop modifications to the currently-effective definition of bulk electric system to ensure that the definition encompasses all facilities necessary for operating an interconnected transmission network and remove the Regional Entity discretion that currently allows for regional variations without review or oversight. We also believe NERC's proposed definition satisfies the Commission's technical concerns in Order No. 743 through the use of a bright-line 100 kV threshold, with specific inclusions and exclusions within the definition, for identifying bulk electric system elements and the establishment of an exception process for facilities that are not necessary for operating the interconnected transmission network. Further, we believe NERC's proposed definition improves clarity and transparency. Below, we discuss the

[64] *Id.*

proposed "core" bulk electric system definition as well as each bright-line inclusion and exclusion of the proposed definition.

49. While proposing to approve NERC's modified definition, we also seek additional explanation and comments regarding potential applications of the "core" definition, as well as the inclusions and exclusions. We believe that a common understanding of the proposed bulk electric system definition (1) promotes consistent application of the definition in identifying bulk electric system elements and facilities and (2) provides up-front clarity so as to minimize the need for future clarifications either formally through NERC's standards clarification process or case-specific in a compliance setting. Thus, we seek comment from NERC and other interested persons regarding the scenarios and applications of the NERC proposal, discussed below. Although we propose to approve the definition in this rulemaking, the responses to our questions are also intended to guide the Commission as to whether other action may be necessary, for example, directing NERC to develop a further modification to the core definition, inclusions or exclusions pursuant to section 215(d)(5) of the FPA.

50. Further, pursuant to section 215(f) of the FPA, we propose to approve the revisions to the NERC Rules of Procedure that establish an exception process to determine case-specific exceptions to the bulk electric system definition. NERC's proposal meets the section 215(f) standard of review for changes to the Rules of Procedure. The Detailed Information Form in the proposed rules identifies "base-line" information and data that any applicant must submit. Further, after Regional Entity input,

NERC makes the final decision on whether to grant an exception request, which better assures consistency of decisions across all regions.

51. In Order No. 743, the Commission stated that NERC should maintain a list of facilities included or excluded from the bulk electric system pursuant to the exception process.[65] NERC indicates that, while it plans to maintain such a list, maintaining the list is an internal NERC function and, thus, not included in NERC's proposed Rules of Procedure. To understand how NERC intends to comply with the directive from Order No. 743, we propose to require that NERC submit a compliance filing detailing its internal process for tracking exception requests.

52. Below, the Commission discusses (A) the "core" bulk electric system definition; (B) proposed inclusions and exclusions in the definition; (C) the case-specific exception process; (D) the Detailed Information Form; and (E) NERC's implementation plan.

A. The Commission Proposes to Approve the Core Definition of Bulk Electric System

53. The bulk electric system "core" definition developed by NERC states as follows:

> Unless modified by the lists shown below, all Transmission Elements operated at 100 kV or higher and Real Power and Reactive Power resources connected at 100 kV or higher. This does not include facilities used in the local distribution of electric energy.

54. In Order No. 743, the Commission found that "the current definition of bulk electric system is insufficient to ensure that all facilities necessary for operating an

[65] Order No. 743, 133 FERC ¶ 61,150 at P 117.

interconnected electric energy transmission network are included under the 'bulk electric system' rubric."[66] The Commission also stated that the "aim" of the final rule was to "eliminate inconsistencies across regions, eliminate the ambiguity created by the current discretion in NERC's definition of bulk electric system, provide a backstop review to ensure that any variations do not compromise reliability, and ensure that facilities that could significantly affect reliability are subject to mandatory rules."[67] The Commission stated that the one way to accomplish these goals is to eliminate the regional discretion in the current definition, and maintain the bright-line threshold that includes all facilities operated at or above 100 kV and establish an exception process and criteria for excluding facilities that are not necessary for the operation of the interconnected transmission network.[68]

55. It appears that NERC's proposal satisfies the objectives set forth in Order No. 743. The "core" definition, quoted above, establishes the fundamental threshold for inclusion of facilities in the bulk electric system as those that are operated at 100 kV or higher, if they are transmission elements, or are connected at 100 kV or higher, if they are real power or reactive power resources. The core definition also establishes a 100 kV criterion as a bright-line threshold, rather than as a general guideline as in the current

---

[66] Order No. 743, 133 FERC ¶ 61,150 at P 30.

[67] *Id.* P 2.

[68] *Id.*

definition, i.e., the phrase "generally operated at" in the current definition is eliminated. As NERC explains, the core definition also continues to capture equipment associated with the facilities included in the bulk electric system.[69]

56. Further, consistent with Order No. 743, NERC's proposed "bulk electric system" definition eliminates the phrase "as defined by the Regional Reliability Organization…." As a result, NERC's proposed definition will apply nation-wide. Thus, we believe NERC's proposal adequately addresses the concerns articulated in Order No. 743 regarding unfettered regional discretion and the need for a consistent approach satisfies the concerns regarding the elimination of inconsistencies across regions. The Commission seeks comment on whether the revised definition adequately eliminates subjectivity and regional variation as required in Order No. 743.[70]

---

[69] The core definition includes all "Transmission Elements operated at or above 100 kV." As NERC explains in its petition, the NERC-defined term "Transmission" includes the phrase "associated equipment." The NERC Glossary defines "Transmission" as "[a]n interconnected group of lines and associated equipment for the movement or transfer of electric energy between points of supply and points at which it is transformed for delivery to customers or is delivered to other electric systems." Additionally, the Glossary defines "Elements" as "[a]ny electrical device with terminals that may be connected to other electrical devices such as a generator, transformer, circuit breaker, bus section, or transmission line. An element may be comprised of one or more components." We agree with NERC that while the new definition does not use the term "associated equipment," the phrase is included in the definition through the defined term "Transmission Elements."

[70] *Id.* PP 11-12, 57. The Commission notes that nothing in the immediate rulemaking proceeding should impact the application of available transmission capability (ATC) calculations as set for in Order No. 890. *See Preventing Undue Discrimination and Preference in Transmission Service*, Order No. 890, FERC Stats. & Regs. ¶ 31,241, at P 196, *order on reh'g*, Order No. 890-A, FERC Stats. & Regs. ¶ 31,261 (2007), *order on*

(continued…)

57. Below, we seek comment regarding the exclusion of facilities used in local distribution.

Local Distribution

58. In Order No. 743, the Commission acknowledged that "Congress has specifically exempted 'facilities used in the local distribution of electric energy'" from the Bulk-Power System definition and that, because such facilities are exempted from the Bulk-Power System, they also are excluded from the bulk electric system.[71] The Commission also stated that, although local distribution facilities are excluded from the definition, it still is necessary to determine which facilities are local distribution, and which are transmission.[72] As the Commission stated in order No. 743-A, "[w]hether facilities are used in local distribution will in certain instances raise a question of fact, which the Commission has jurisdiction to determine." In Order No. 743, the Commission also recognized that NERC would need to establish whether a particular facility is local distribution or transmission, and directed NERC to develop a means, subject to

---

reh'g, Order No. 890-B, 123 FERC ¶ 61,299 (2008), *order on reh'g*, Order No. 890-C, 126 FERC ¶ 61,228 (2009), *order on clarification*, Order No. 890-D, 129 FERC ¶ 61,126 (2009). Public utility transmission service providers (or their designate) have the obligation to comply in all respects with their Commission approved tariff. This requires that they must continue to use the applicable Reliability Standards to plan and operate both their bulk electric system and non-bulk electric system facilities included in their tariffs.

[71] Order No. 743, 133 FERC ¶ 61,150 at P 37.

[72] Order No. 743-A, 134 FERC ¶ 61,210 at P 67.

Commission approval, to make such a determination.[73] In Order No. 743-A the Commission clarified that

> the statement in Order No. 743, "determining where the line between 'transmission' and 'local distribution' lies … should be part of the exemption process the ERO develops" was intended to grant discretion to the ERO, as the entity with technical expertise, to develop criteria to determine how to differentiate between local distribution and transmission facilities in an objective, consistent, and transparent manner. … Once NERC develops and submits its proposal to the Commission, the Commission will, as part of its evaluation of the proposal, determine whether the process developed adequately differentiates between local distribution and transmission.
>
> We agree … that the Seven Factor Test could be relevant and possibly is a logical starting point for determining which facilities are local distribution for reliability purposes, while also allowing NERC flexibility in applying the test or developing an alternative approach as it deems necessary.[74]

59. In addressing what constitutes local distribution, NERC explains that the second sentence in the core definition, which excludes "facilities used in the local distribution of electric energy," is consistent with section 215(a)(1)(B) of the FPA and the Commission's regulations at 18 C.F.R. § 39.1 and as recognized in Order No. 743-A."[75] NERC states that "the core definition… establish[es] an express carve out for facilities used in the local distribution of electrical energy."[76] NERC also states that facilities for the local distribution of electric energy are expressly excluded from the bulk electric

---

[73] Order No. 743, 133 FERC ¶ 61,150 at P 37.

[74] Order No. 743-A, 134 FERC ¶ 61,210 at PP 68-69 (footnotes omitted).

[75] NERC BES Petition at 16.

[76] *Id.* at 22-23.

system by the core definition as well as by the local network exclusion, exclusion E3.[77] NERC adds that, while some stakeholders suggested that the Commission's seven-factor test should be employed to determine distribution facilities, the NERC drafting team "rejected this approach as the sole determination of distribution facilities, … [but] pointed out that such a test could be utilized by a Submitting Entity making an Exception Request but that other information should be supplied to support the request."[78]

60. The Commission seeks comment from NERC and the public regarding how the proposed definition is responsive to the Commission's directives in Order Nos. 743 and 743-A. Specifically, the Commission seeks comment on how NERC's proposal

---

[77] NERC's LN Technical Paper, Exhibit G of NERC's Petition, provides:

> In Order 743a, the Commission made it clear that facilities that are used in the local distribution of electric energy will be excluded from the Bulk Electric System. … In response to this facet of the Order, in developing the BES definition, the SDT has followed this guidance. Exclusion E3 was specifically designed to capture for exclusion those high voltage non-radial facilities being used for the local distribution of energy.
>
> The exclusion characteristics in items a, b, and c … serve to ensure that facilities excluded under the local network exclusion (E3) are not necessary for the reliable operation of the interconnected electric transmission network and are instead used in the local distribution of energy.

Id., Ex. G, at 2.

[78] NERC BES Petition at 49.

adequately differentiates between local distribution and transmission facilities in an objective, consistent, and transparent manner.[79]

B. The Commission Proposes to Approve the List of Inclusions and Exclusions in the Definition of Bulk Electric System

61. Along with the core definition, NERC's proposal provides specific inclusions and exclusions. The inclusions and exclusions provide added clarity regarding which elements are part of the bulk electric system as compared to the existing definition. For example, the inclusion of generating resources, blackstart resources and dispersed power producing resources provide additional information and granularity that assist in the identification of bulk electric system facilities or elements. However, we also have questions about how some of the inclusions and exclusions will be applied by NERC, Regional Entities and users, owners and operators of the Bulk-Power System. Through the responses to these questions we seek to better understand potential applications of the inclusions and exclusions, their effect on identifying the facilities or elements for bulk electric system reliability, and whether possible gaps exist.

[79] We note that an element that falls outside of the definition of bulk electric system is not necessarily local distribution.

1. Inclusions

a. Inclusion I1 (Transformers)

62. Inclusion I1 provides "[t]ransformers with the primary terminal and at least one secondary terminal operated at 100 kV or higher unless excluded under [the radial system or local network exclusion]." NERC explains that:

> Transformers operating at 100 kV or higher are part of the existing definition, but since transformers have windings operating at different voltages, and multiple windings in some circumstances, clarification was required to explicitly identify which transformers are included in the BES. Inclusion I1 includes in the BES those transformers operating at 100 kV or higher on the primary winding and at least one secondary winding, so as to be in concert with the core definition.[80]

63. We believe that inclusion I1, with NERC's explanation, is a reasonable approach to identifying transformers that are appropriately included as part of the bulk electric system. However, circumstances may warrant inclusion of a particular transformer – through the proposed case-specific exception process - where a transformer is operated at 100 kV or higher on the primary winding but all secondary terminals are operated below 100 kV. The joint NERC and Commission staff report on the September 8, 2011, Arizona-Southern California blackout discusses how a 92 kV networked system experienced parallel flows from bulk electric system elements through two 230/92 kV

[80] NERC BES Petition at 17.

transformers.[81] The report explains that the reliability coordinator, transmission operators and balancing authorities did not consider certain sub-100 kV facilities, including two 230/92 kV transformers as bulk electric system elements. Consequently, when contingencies occurred on the bulk electric system on September 8, 2011, the reliability coordinator, transmission operators and balancing authorities were unaware that the contingencies adversely impacted the 230/92 kV transformers or how the loss of the transformers impacted system reliability.[82] The Commission seeks comment on whether these types of transformers, i.e., those that have a terminal operated at 100 kV or above on the high side and below 100 kV on the low side should be designated as part of the bulk electric system. If answered in the affirmative, the Commission seeks further comment whether the case-by-case exception process suffices, or a generic inclusion is appropriate to address the concerns identified in Order No. 743.

b. <u>Inclusion I2 (Generating Resources)</u>

64. Inclusion I2 provides:

> Generating resource(s) with gross individual nameplate rating greater than 20 MVA or gross plant/facility aggregate nameplate rating greater than 75 MVA including the generator terminals through the high-side of the step-up transformer(s) connected at a voltage of 100 kV or above.

---

[81] Arizona-Southern California Outages on September 8, 2011 – Causes and Recommendations at 96 (September 2011 Blackout Report), *available at* http://www.ferc.gov/legal/staff-reports/04-27-2012-ferc-nerc-report.pdf.

[82] *Id*. at 96-97.

According to NERC, this inclusion "mirrors" the text of the NERC *Registry Criteria* for generating units. NERC explains that the drafting team "found no technical rationale for changing at this time from the thresholds for generating resources presently specified in the … *Registry Criteria*."[83] Further, NERC states that, to provide clarity, the revised definition specifies that the bulk electric system "includes the generator terminals through the high-side of the step-up transformer connected at a voltage of 100 kV or above."[84]

65. We believe that Inclusion I2 provides useful granularity regarding the inclusion of generation resources as part of the bulk electric system. However, we seek comment regarding several aspects of inclusion I2. NERC's Registry Criteria thresholds for generators provides for the registration of "[i]ndividual generating unit > 20 MVA (gross nameplate rating) and is directly connected to the Bulk Power System" or "[g]enerating plant/facility > 75 MVA (gross aggregate nameplate rating) or when the entity has responsibility for any facility consisting of one or more units that are connected to the Bulk Power System at a common bus with total generation above 75 MVA gross nameplate rating."[85] We agree that proposed inclusion I2 is consistent with the individual and aggregate nameplate rating thresholds set forth in the Registry Criteria. We note,

---

[83] NERC BES Petition at 17. NERC states "A basic tenet that was followed in developing the revised BES Definition was to avoid changes to Registrations due to the revised BES Definition if such changes are not technically required for the BES Definition to be complete." *Id.* (citing Order No. 743-A, 134 FERC ¶ 61,210 at P 102).

[84] NERC BES Petition at 17.

[85] Registry Criteria, III.c.1 and c.2 (Generator Owner/Operator).

however, that the Registry Criteria and the proposed definition differ regarding the description of the connection point of the generating units and plants. While inclusion I2 specifies "generator terminals through the high-side of the step-up transformer(s) connected at a voltage of 100 kV or above," the Registry Criteria specifies a "direct connection" to the Bulk-Power System. We seek comment whether inclusion I2 will result in a material change to registration of existing generating units due to the difference in the language regarding the connection point. In addition, we seek comment if, pursuant to inclusion I2, the following circumstances are included in the bulk electric system: a generating unit, with a gross individual nameplate rating greater 20 MVA connected through the high-side of the step-up transformer connected at a voltage of 100 kV or above *when the low side of the transformer is less than 100 kV*. How does this result differ for a generation resource with two or more step-up transformers where the last transformer in the series operates at 100 kV or above, for example, a 50 MVA generator first steps up through a 23 kV transformer on the low side and 69 kV on the high side and then immediately steps up through a second transformer at the same site with less than 100 kV on the low side and above 100 kV on the high side?

c. Inclusion I3 (Blackstart Resources Identified in the Transmission Operator's Restoration Plan)

66. Inclusion I3 identifies as part of the bulk electric system "Blackstart Resources identified in a Transmission Operator's restoration plan." NERC explains that blackstart resources are "vital" for the reliable operation of the bulk electric system and are included

"regardless of their size (MVA) or the voltage at which they are connected."[86] NERC further states that including blackstart resources is consistent with the *Registry Criteria,* which provide that *"any generator, regardless* of size, that is a blackstart unit material to and designated as part of a transmission operator entity's restoration plan" is eligible for registration.[87]

67. We agree with NERC that inclusion of blackstart resources in the definition is vital to reliability and is an improvement to the definition. We seek clarification whether the term "restoration plan" refers to the system restoration plans required in the Emergency Preparedness and Operations (EOP) Reliability Standards or included in a Commission approved tariff.[88]

68. NERC states that first posting of the revised definition included "cranking paths" for blackstart resources due to a concern about "the possibility of having Blackstart Resources without a 'guaranteed' path" to the [bulk electric system]."[89] NERC explains

---

[86] NERC BES Petition at 18.

[87] *Id.* (emphasis added).

[88] Reliability Standard EOP-005-1, System Restoration Plans, requires a transmission operator to create "a restoration plan to reestablish its electric system in a stable and orderly manner in the event of a partial or total shutdown of its system."

[89] NERC BES Petition at 47. The NERC Glossary defines "Cranking Path" as "[a] portion of the electric system that can be isolated and then energized to deliver electric power from a generation source to enable the startup of one or more other generating units." *See also* the Regional Bulk Electric System Definition Coordination Group concept paper that recommends including the designated cranking paths for the blackstart

(continued…)

that "a number of commenters complained that this was improperly bringing distribution level Elements into the [bulk electric system], as many Cranking Paths are at the distribution level" and "also pointed out that this was an illusory proposition as intended Cranking Paths are not always the ones used in actual restoration."[90] As a result of the industry feedback, NERC deleted cranking paths from the revised definition with the understanding that the issue would be revisited in Phase 2 of the BES project. According to NERC, "this approach would maintain status quo on this topic, consistent with Order Nos. 743 and 743-A, while providing for a full discussion and consideration of the issue in a less time constrained environment."[91] ."[92] Subsequently, however, the topic of cranking paths was deleted from the scope of the Phase 2 BES project.[93] In light of the

---

resources available at http://www.nerc.com/docs/standards/sar/Project_2010-17_Concept_Paper.pdf.

[90] *Id*.

[91] *Id*. NERC's Project 2010-17, the "Phase 2 BES Project."

[92] *Id*. NERC's Project 2010-17, the "Phase 2 BES Project."

[93] The February 21-23, 2012 meeting notes from the Project 2010-17 Definition of Bulk Electric System Phase 2 Standard Drafting Team states that "the SDT decided to delete the Cranking Path reference in the [Phase 2] SAR." The reasons for the deletion included "that Cranking Paths reach down into distribution and thus shouldn't be included in the definition," and "that this issue was debated in Phase 1 and resolution was obtained," and "that Cranking Paths were only needed when an entity was in restoration mode so it wasn't needed in the definition." However, the same document states some commenters believe "that Cranking Paths were only needed when an entity was in restoration …and…that this was a reason to have it in the definition." *See* Meeting Notes from the Project 2010-17 Definition of Bulk Electric System Phase 2 Standard Drafting Team, February 21-23, 2012, at Page 5, *available at*

(continued…)

decision not to further pursue a possible revision to the bulk electric system definition pertaining to cranking paths, the Commission is concerned whether a reliability gap exists with regard to cranking paths. Cranking paths constitute a basic element of system restoration, and it is unclear whether reliability can be adequately maintained when blackstart generators are defined as part of the bulk electric system but not the transmission paths that are used to deliver the energy from blackstart generators to the integrated transmission system. We also recognize that cranking paths may implicate facilities used in local distribution. Accordingly, we seek comment on whether a reliability gap may exist with regard to cranking paths and, if so, what potential approaches are appropriate to remove the gap. We also seek comment on the appropriate role, if any, of state regulators in ensuring that energy from blackstart generation is reliably delivered through cranking paths to restart the system after an event.

d. <u>Inclusion I4 (Dispersed Power Producing Resources)</u>

69. Inclusion I4 identifies as part of the bulk electric system:

> Dispersed power producing resources with aggregate capacity greater than 75 MVA (gross aggregate nameplate rating) utilizing a system designed primarily for aggregating capacity, connected at a common point at a voltage of 100 kV or above.

---

http://www.nerc.com/docs/standards/dt/Meeting_Notes-Project_2010-17_DBES-February_21-23,_2012.pdf.

70. NERC explains that this inclusion is intended "to accommodate the effects of variable generation" on the bulk electric system.[94] NERC further states that even though inclusion I4 could be considered subsumed in Inclusion I2 (generating resources), NERC believes it is appropriate "to expressly cover dispersed power producing resources utilizing a system designed primarily for aggregating capacity."[95]

71. We believe that inclusion I4 provides useful granularity in the bulk electric system definition. To better understand the application of inclusion I4, we seek comment whether this provision includes as part of the bulk electric system the individual elements (from each energy-producing resource at the site through the collector system to the common point at a voltage of 100 kV or above) used to aggregate the capacity and any step-up transformers used to connect the system to a common point at a voltage of 100 kV or above.

e. <u>Inclusion I5 (Static or Dynamic Reactive Power Devices)</u>

72. Inclusion I5 identifies as part of the bulk electric system:

> Static or dynamic devices (excluding generators) dedicated to supplying or absorbing Reactive Power that are connected at 100 kV or higher, or through a dedicated transformer with a high-side voltage of 100 kV or higher, or through a transformer that is designated in Inclusion I1.

---

[94] NERC BES Petition at 18.

[95] *Id*.

NERC explains that this inclusion is the technical equivalent of inclusion I2 (generating resources), for reactive power devices and points out that the existing definition is unclear as to how these devices are treated.[96] NERC states inclusion I5 provides clarity by "providing specific criteria for Reactive Power devices, thereby further limiting subjectivity and the potential for discretion" in the application of the revised definition.[97]

73. The Commission agrees with NERC that this inclusion adds clarity to the application of the bulk electric system definition by providing specific criteria for reactive power devices. For cases where the reactive power device is connected through a transformer designated in inclusion I1, we seek comment on whether both the reactive power device and the transmission elements connecting the reactive power device to the transformer are included as part of the bulk electric system pursuant to inclusion I5.

2. Exclusions

74. NERC states that the proposed definition identifies four facilities configurations that should not be included in the bulk electric system: (1) radial systems, (2) behind-the-meter generating units, (3) local networks, and (4) retail customer reactive power devices.

75. We agree that the proposed definition's exclusions provide clarity and granularity. For example, the exclusion of generating units on the customer's side of the retail meter that serves all or part of the retail load (exclusion E2) and the exclusion for reactive power devices owned and operated by a retail customer for its own use (exclusion E4)

---

[96] *Id.*

[97] *Id.*

provide reasonable limitations on bulk electric system elements. While we believe that the exclusions provide added clarity, we also seek comment on certain aspects of exclusions E1 and E3 to ensure a more complete understanding of their application.

a. Exclusion E1 (Radial Systems)

76. Exclusion E1 provides as follows:

> Radial systems: A group of contiguous transmission Elements that emanates from a single point of connection of 100 kV or higher and:
>
> a) Only serves Load. Or,
> b) Only includes generation resources, not identified in Inclusion I3,
> with an aggregate capacity less than or equal to 75 MVA (gross nameplate rating). Or,
> c) Where the radial system serves Load and includes generation resources, not identified in Inclusion I3, with an aggregate capacity of non-retail generation less than or equal to 75 MVA (gross nameplate rating).
>
> Note – A normally open switching device between radial systems, as depicted on prints or one-line diagrams for example, does not affect this exclusion.

NERC states that radial facilities are excluded under the currently effective bulk electric system definition, and the detailed criteria in the revised definition provide enhanced clarity.[98] We seek comment on our understanding and NERC's explanation of exclusion E1 in order for the Commission to ensure application of exclusion E1 is consistent. Also, we seek comment to determine if the configurations covered by Conditions (a), (b), or (c) of exclusion E1 remove from the bulk electric system generation connected to a radial

[98] *Id.*

system that otherwise satisfies inclusion I2. The Commission would like to ensure that the conditions in exclusion E1 will not lead to conflicting results when applying inclusion I2 and exclusion E1.

77. As stated above, the radial exclusion applies to "a group of contiguous *transmission* Elements that emanates from a single point of connection of 100 kV or higher…." While the term "Elements" includes the term generator,[99] the use of the term "transmission" before "Elements" indicates that exclusion E1 applies only to transmission elements. The phrase "transmission Elements" in this provision does not apply to generating resources that are bulk electric system resources pursuant to inclusion I2 (generating resources), connected to a radial line operated at 100 kV above.[100]

---

[99] "Element" is defined in the NERC Glossary as "[a]ny electrical device with terminals that may be connected to other electrical devices *such as a generator*, transformer, circuit breaker, bus section, or transmission line. An element may be comprised of one or more components." (emphasis added).

[100] Our understanding comports with the NERC standard drafting team's explanation in response to industry comments that generation resources connected within the radial system are not excluded pursuant to exclusion E1. *See* NERC BES Petition, Exh. D, Consideration of Comments Report, at 223 (stating that "Exclusion E1 is an exclusion for the contiguous transmission Elements connected at or above 100 kV. Generation resources connected within the radial system are qualifiers for this exclusion.").

i. Definition of 'Radial Systems' and Condition (a) - Radials only Serving Load

78. NERC stated that it developed exclusion E1 to provide enhanced clarity as compared to the existing definition.[101] Exclusion E1 defines the term 'radial systems' as "a group of contiguous transmission Elements that emanates from a single point of connection of 100 kV or higher." The Commission seeks comment on how NERC's proposal would be applied in the three scenarios described below.

79. Figure 1 below depicts facilities configurations in which all of the 230 kV and 69 kV transmission elements emanate from a single point of connection of 100 kV or higher. The Commission seeks comment on whether each of the radial systems shown in figure 1, the 230 kV elements above each transformer to the point of connection to each 230 kV line, respectively, are excluded from the bulk electric system pursuant to exclusion E1.

[101] NERC BES Petition at 18.

Figure 1

Two Radial Systems Eligible for Exclusion E1

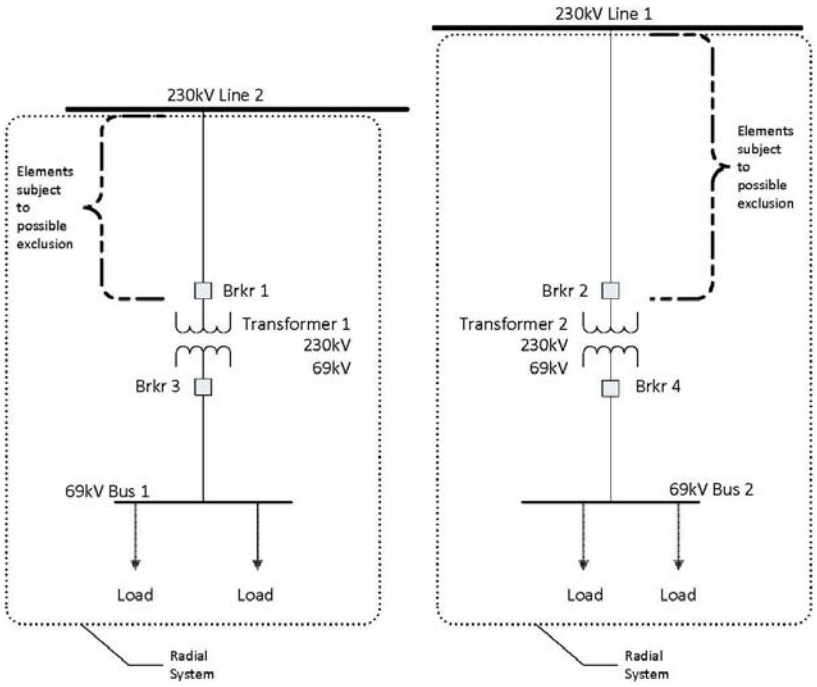

80. Another scenario shown in figure 2 below depicts a configuration containing a 115 kV loop, with the configuration emanating from two points of connection of 100 kV or higher. We seek comment whether, in this configuration, the 115 kV and 230 kV elements above Transformers 1 and 2 to the points of connection to the two 230 kV lines would be excluded from the bulk electric system pursuant to exclusion E1. Is the configuration shown in figure 2 more appropriately analyzed pursuant to the "local network" exclusion E3 and, if so, what if any elements operated at or above 100 kV would be excluded pursuant to exclusion E3?

Figure 2

Networked Configuration w/115 kV Loop

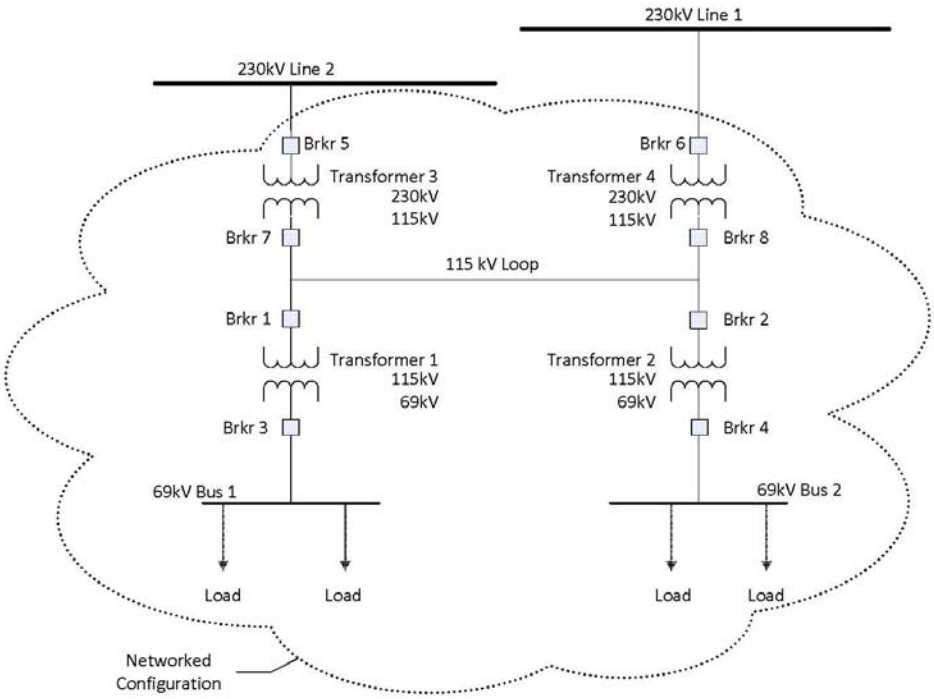

81. The Commission agrees with NERC that 'radial systems' only serving load and emanating from a single point of connection of 100 kV or higher should be excluded from the bulk electric system. The Commission is concerned that the exclusion could allow elements operating at 100 kV or higher in a configuration that emanates from two or more points of connection to be deemed "radial" even though the configuration remains contiguous through elements that are operated below 100 kV. For example, figure 3 below depicts a configuration with two points of connection of 100 kV or higher that are contiguous through a 69 kV loop. We seek comment on how to evaluate the configuration in figure 3 vis-à-vis the radial system definition and whether it is appropriate to examine the elements below 100 kV to determine if the configuration

meets the exclusion E1 definition for radial systems. In other words, does figure 3 depict a system emanating from two points of connection at 230 kV and, therefore, the 230 kV elements above the transformers to the points of connection to the two 230 kV lines would not be eligible for the exclusion E1 notwithstanding the connection below 100 kV?

Figure 3

Networked Configuration w/69 kV Loop

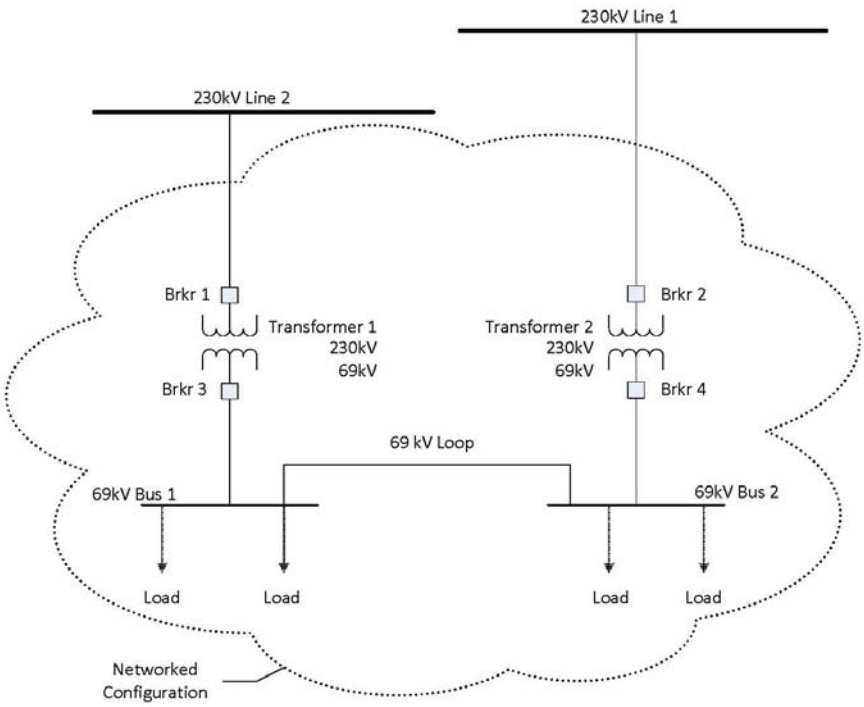

ii. <u>Condition (b) – Radials With Limited Generation and Condition (c) – Radials With Limited Generation and Load</u>

Condition (b) of exclusion E1 provides that a radial system is excluded if it "[o]nly includes generation resources, not identified in Inclusion I3, with an aggregate capacity less than or equal to 75 MVA (gross nameplate rating)." Proposed Condition (c) of exclusion E1, excludes radial systems "[w]here the radial system serves Load and

includes generation resources, not identified in Inclusion I3, with an aggregate capacity of non-retail generation less than or equal to 75 MVA (gross nameplate rating)."

82. NERC states that Conditions (b) and (c) are "intended to address the circumstances of small utilities (including municipal utilities and cooperatives)."[102] The NERC BES Petition, including the Exhibit E record of development, does not further explain the need for, or the impact of, these proposed provisions. Accordingly, we seek comment regarding the specific circumstances that Conditions (b) and (c) are intended to address.

83. Because Condition (b) describes generation connected to a radial system with no load and Condition (c) describes generation connected to a radial system with generation and load, it appears that the power generated on these radial systems would, by design, be delivered or injected to the bulk electric system and transported to other markets. In this circumstance, it appears that a line 100 kV or above connected to a generator with a capacity 75 MVA or below would not be included in the bulk electric system. The Commission seeks comment on the appropriateness of excluding such radials.

iii. <u>Normally Open Switches</u>

84. Proposed exclusion E1 includes a "note" stating that a "normally open switching device between radial systems, as depicted on prints or one-line diagrams for example, does not affect this exclusion." NERC states that this note is intended to address a

[102] NERC BES Petition at 19.

common network configuration in which two separate sets of facilities that, each standing alone, would be recognized as radial systems but are connected by a switch that is set to the open position for reliability purposes.[103]

85. NERC explains that these switches are installed by entities to provide greater reliability to their end-use customers. For example, when the entity schedules maintenance activities on a radial line or an unscheduled outage occurs that impacts a single point of supply to the radial line which could cause the disruption of power supply to the end-use customers served by the line, the switch allows the entity to use another feed on the connected radial line.

86. Figure 4 below illustrates a configuration with a normally open switch.

[103] NERC BES Petition at 19-20.

Figure 4
69 kV Networked Configuration with Normally Open Switch

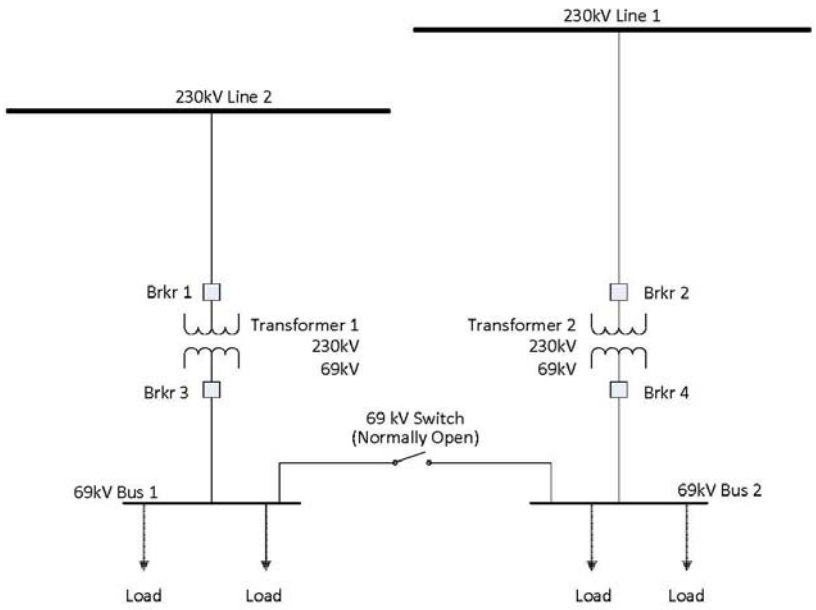

NERC states that "[t]he concept that two sets of radial facilities that are normally unconnected to each other should be subject to…applicable Reliability Standards during the limited time periods when they are connected by the closing of the normally open switch in the maintenance-related or outage-related circumstances described above would be fundamentally impractical and unworkable (from both the entity's perspective and the ERO's perspective), and would misapprehend this very common, reliability-driven facilities configuration."[104]

87. NERC states that "a normally open switch" will be identified in documents such as prints or one-line diagrams and that "[t]he concept and usage of the 'normally open

[104] *Id*. at 20-21.

switch' in such configuration is well understood in the electric utility industry."[105] We seek comment on NERC's characterization and whether the phrase "normally open" is subject to interpretation or misunderstanding, or whether a "normally open" configuration is potentially difficult to oversee. Further, we seek comment on the need of transmission operators or other functional entities to study the system impacts of the closing of a "normally open" switch, or to take other steps to ensure awareness of the impacts of the loop that is created by the closing of the switch if the closed loop is not included as part of the bulk electric system.

b. Exclusion E2 (Behind the Meter Generation)

88. Exclusion E2 excludes "[a] generating unit or multiple generating units on the customer's side of the retail meter…." The Commission believes that this is an appropriate exclusion that provides additional clarity and granularity to the definition of bulk electric system.

c. Exclusion E3 (Local Networks)

89. As noted above, we believe that a common understanding of the exclusions promotes consistent application of the definition in identifying bulk electric system elements. In particular, as discussed in greater detail below, we seek comment on the following issues with respect to the application of exclusion E3: (1) whether generation resources are excluded by this exclusion; (2) how the exclusion applies to a looped lower

[105] *Id*. at 19.

voltage system; (3) whether the 300 kV ceiling is appropriate for the application of the exclusion; (4) whether the prohibition for generation produced inside a local network is not transporting power to other markets outside the local network applies in both normal and emergency operating conditions.

90. Exclusion E3 defines the term local networks as:

> A group of contiguous transmission Elements operated at or above 100 kV but less than 300 kV that distribute power to Load rather than transfer bulk-power across the interconnected system. LN's emanate from multiple points of connection at 100 kV or higher to improve the level of service to retail customer Load and not to accommodate bulk-power transfer across the interconnected system.

Exclusion E3 also identifies three conditions that must be satisfied for the exclusion to apply: (a) limit on connected generation to 75 MVA aggregate capacity of non-retail generation (gross nameplate rating); (b) power flows only into the local network and does not transfer through the 'local network'; and (c) the local network is not part of a flowgate or transfer path.

91. NERC states the design and operation of local networks is such that at the point of connection with the interconnected transmission network is similar to that of a radial facility, in particular that power always flows in a direction from the interconnected transmission network into the local network.[106] Further, according to NERC, "[l]ocal

[106] NERC BES Petition at 22.

networks provide local electrical distribution service and are not planned, designed or operated to benefit or support the balance of the interconnected transmission network."[107]

92. Similar to our discussion of the definition of 'radial systems' in exclusion E1, the exclusion E3 local network exclusion applies to transmission Elements, but does not apply to generation resources connected to a local network that otherwise satisfy inclusion I2.

93. NERC states in the LN Technical Paper, that "Exclusion E3 was specifically designed to capture for exclusion those high voltage non-radial facilities being used for the local distribution of energy."[108] The paper further provides:

> Their [local network] design and operation is such that at the point of connection with the interconnected electric transmission network, their effect on that network is similar to that of a radial facility, particularly in that flow always moves in a direction that is from the BES into the facility. Any distribution of parallel flows into the local network from the BES, as governed by the fundamentals of parallel electric circuits, is negligible, and, more importantly, is overcome by the Load served by the local network, thereby ensuring that the net actual power flow direction will always be into the local network at all interface points. The presence of a local network is not for the operability of the interconnected electric transmission network; neither will the local network's separation or retirement diminish the reliability of the interconnected electric transmission network."[109]

---

[107] *Id*.

[108] NERC BES Petition, Exhibit G at 2.

[109] *Id*.

94. We seek further explanation and comment on the statement above that "neither will the local network's separation or retirement diminish the reliability of the interconnected electric transmission network." While a radial facility emanates from one point of connection to the interconnected transmission network, a local network by definition has multiple points of connection to the interconnected transmission network. Thus, regarding a local network, a contingency situation may arise where one of the multiple connections to the interconnected transmission network separates, while other local network connections maintain connectivity with the bulk electric system. We seek comments to better understand how an entity with a candidate local network would analyze such contingencies to determine potential impacts to the reliable operation of the interconnected transmission network.

i. Contiguous Transmission Elements and the 100 kV Lower Limit/300 kV Cap

95. As stated above, exclusion E3 defines local networks as "[a] group of *contiguous* transmission Elements *operated at or above 100 kV but less than 300 kV* that distribute power to Load rather than transfer bulk-power across the interconnected system." While the local network exclusion applies to contiguous transmission elements operating at a minimum of 100 kV, it is unclear how the exclusion applies to a looped lower voltage system. For example, figure 5 depicts a 69 kV looped system emanating from two points of connection at 100 kV or higher.

Figure 5

Networked Configuration w/69 kV Loop

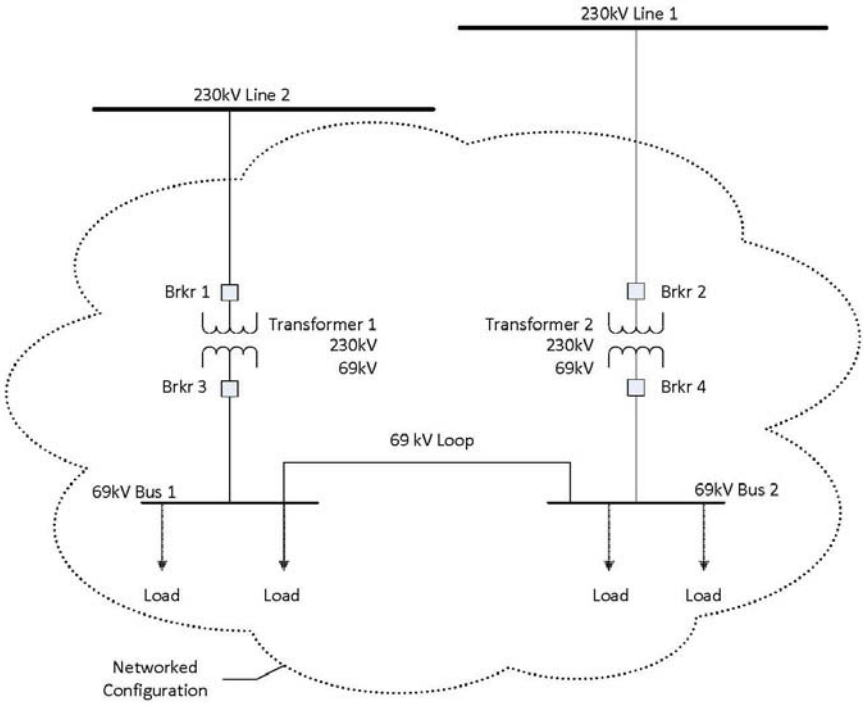

The configuration in figure 5 depicts a group of elements that are contiguous through a 69 kV loop. We seek comment whether the configuration in figure 5 qualifies as a local network and, in particular, whether the configuration satisfies the condition that a local network consists of "a group of *contiguous* transmission Elements *operated at or above 100 kV*…."

96. NERC states the selection of a 300 kV cap for the applicability of an exclusion for a local network was based upon recent NERC standards development work in Project 2006-02 "Assess Transmission Future Needs and Develop Transmission Plans" which sets a voltage level of 300 kV to differentiate extra high voltage (EHV) facilities from high voltage facilities acting as a threshold to distinguish between expected system

performance criteria.[110] NERC states that it seeks to establish consistency in the limitations placed on the exclusion applicability for local network facilities, and has therefore adopted this 300 kV level to ensure that EHV facilities are not subject to this exclusion.[111] NERC provides a "realistic example of the electrical interaction between a typical local network and the [bulk electric system]" in the LN Technical Paper.[112] The example depicted in Appendix 1 of the Technical Paper shows a local network operating at 115 kV. The NERC Technical Paper does not provide examples of a local network operating within the 200 to 300 kV range, for example showing 230 kV facilities operating in a local network. We are concerned whether the 300 kV ceiling is appropriate and reflects actual system configurations that serve local distribution, the stated purpose of the local network exclusion.[113] Accordingly, we seek comment whether (and why or why not) the 300 kV ceiling is appropriate for the application of exclusion E3 and requests examples of systems between 200 and 300 kV that would qualify for this exclusion.[114]

---

[110] NERC BES Petition at 23.

[111] *Id.* at 23 and Exh. G at 4.

[112] *Id.,* Exh. G at 5.

[113] The Commission notes additional differentiations may directly address this concern, such as applying a load limit, which was raised by the NERC System Analysis and Modeling Subcommittee (SAMS) in its effort to support Phase 2 of the bulk electric system definition project as a criterion to limit the exclusion of large cities and regions.

[114] To the extent the information requested is confidential, commenters may provide the information pursuant to 18 C.F.R § 388.112 of the Commission's regulations.

ii. Criterion (a) – Limits on Connected Generation

97. Exclusion E3 criterion (a) provides that the local network and its underlying elements do not include the blackstart resources identified in inclusion I3 and do not have an aggregate capacity of non-retail generation greater than 75 MVA gross nameplate rating. In addition, criterion (a) does not limit the amount of generation besides "non-retail generation" connected to the local network. The Commission agrees with NERC that "local networks" do not include blackstart resources and agrees with the limits on the connected generation imposed by this exclusion.

iii. Criterion (b) – Power Flows only into the Local Network

98. Exclusion E3 criterion (b) specifies that to be eligible for the exclusion, power can only flow into the local network and the local network does not transfer energy originating outside the local network for delivery through the local network. Thus, it appears that, pursuant to criterion (b), generation produced inside a local network is not transporting power to other markets outside the local network. The Commission understands that criterion (b) applies in both normal and emergency operating conditions.[115]

---

[115] *See* NERC BES Petition, Exh. E at 59 ("The Commission directed NERC to revise its BES definition to ensure that the definition encompasses all Facilities necessary for operating an interconnected electric Transmission network. The SDT interprets this to include operation under both normal and Emergency conditions….").

iv. Criterion (c) – Not Part of a Flowgate or Transfer Path

99. Exclusion E3 criterion (c) specifies a "local network" does not contain a monitored facility of a permanent flowgate in the Eastern Interconnection, a major transfer path within the Western Interconnection, or a comparable monitored facility in the ERCOT or Quebec Interconnections, and is not a monitored facility included in an interconnection reliability operating limit. The Commission believes that this is an appropriate criterion.

d. Exclusion E4 (Reactive Power Devices)

100. Exclusion E4 excludes from the bulk electric system "Reactive Power devices owned and operated by the retail customer solely for its own use." NERC explains that exclusion E4 is the technical equivalent of Exclusion E2 for reactive power devices and that the currently effective bulk electric system definition is unclear as to how these devices are to be treated. We believe that this is an appropriate exclusion that provides additional clarity and granularity to the definition of bulk electric system.

Summary

101. In sum, we propose to approve NERC's revised definition of the term bulk electric system, including the specific inclusions and exclusions. We believe that NERC's proposal provides a reasonable basis for the identification of bulk electric system elements and appears to improve upon the currently effective definition by: (1) removing the language that provides for regional discretion, (2) removing the language "generally operated at…" so as to create a clear 100 kV threshold; and (3) providing additional clarity and granularity. Above, we have asked for comment on a series of questions

regarding the applicability of the "core" definition and specific inclusions and exclusions. We believe that comments on these questions will assist in providing further clarity and understanding of the NERC proposal. We further note that although we propose to approve the definition in this rulemaking, the responses to our questions are intended to guide the Commission as to whether other action is necessary, for example, by directing NERC to develop a further modification to the definition or inclusions/exclusions pursuant to section 215(d)(5) of the FPA.

C. The Commission Proposes to Approve the NERC Rules of Procedure that Provide a Case-Specific Exception Process

102. As described above, in Docket No. RM12-7-000, NERC submitted proposed revisions to its Rules of Procedure that provide procedures for requesting and receiving case-specific exception from the definition of bulk electric system.[116]

103. Pursuant to FPA section 215(f), we propose to find that the exception process is just, reasonable, not unduly discriminatory or preferential, and in the public interest and satisfies the requirements of section 215(c). Further, we believe that the proposal satisfies the statement in Order No. 743 that NERC establish an exception process for excluding facilities that are not necessary for the reliable operation of the interconnected transmission network from the definition of the bulk electric system.[117]

---

[116] *See* Section I.D.2 above for further description of NERC's proposed revisions to the NERC Rules of Procedure.

[117] *See* Order No. 743, 133 FERC ¶ 61,150 at P 16.

104. NERC explains that it was not feasible to develop a single set of technical criteria that would be applicable to all exception requests so it developed the Detailed Information Form to ensure that a consistent baseline of technical information is provided for NERC to make a decision on all exception requests. This information and the proposed exception process allows NERC to provide consistent determinations on exception requests submitted from different regions involving the same or similar facts and circumstances, and allows NERC to take into account the aggregate impact on the bulk electric system of approving or denying all the exception requests. Finally, the exception process includes provisions for reporting information that may alter the status of an approved exception, verifying whether an exception continues to be warranted, and revoking an exception that is no longer warranted.[118] Thus, we believe that this process is equally efficient and effective as the Order No. 743 directive to establish an exception process for excluding facilities that are not necessary for the reliable operation of the interconnected transmission network. In addition, we believe that NERC's proposal appears to be clear, transparent, and uniformly applicable..

105. NERC and the industry should be commended for the development of the 100 kV threshold, the identified inclusions and exclusions, and the exception process. Together, this package of important reforms will bring valuable improvements to the process of identifying those facilities that are necessary for the operation of the interconnected

[118] NERC ROP Petition at 16.

transmission network, and thus should be included in the definition of bulk electric system. For these reasons, we propose to approve NERC's proposals, as discussed above.

106. The Commission seeks input from NERC and the industry, however, as to additional reforms that may be needed to the definition or to the Rules of Procedure to ensure that, over the long term, the facilities necessary to the reliability of the interconnected transmission network are captured in its definition. In particular, we note that while establishing a "bright-line" threshold of 100 kV has significant advantages, it may not capture all facilities that are necessary for the operation of the interconnected transmission network that fall below that threshold. As the Commission indicated in Order No. 743 and Order No. 743-A, its goal is that the definition of bulk electric system should include all facilities necessary for the operation of the interconnected transmission network, except for local distribution. Although the Commission indicated that one way to meet this goal was to establish a 100 kV "bright-line" threshold, the Commission also made clear that the "bright-line" threshold would be a "first step or proxy" in determining which facilities should be included in the bulk electric system.[119] Indeed, the Commission, agreeing with commenters, held that NERC should not necessarily stop at 100 kV and should, through the development of the exception process, ensure that "critical" facilities operated at less than 100 kV, and that the Regional Entities determine

[119] Order No. 743-A, 134 FERC ¶ 61,210 at P 40.

are necessary for operating the interconnection network.[120] The Commission clarified that including sub-100 kV facilities should be done in an "appropriate and consistent" manner.[121]

107. Recent events reinforce the Commission's statements in Order Nos. 743 and 743-A with respect to ensuring that sub-100 kV facilities, as appropriate, are included in the bulk electric system. The September 2011 Blackout Report concluded that certain sub-100 kV facilities, which were not designated as bulk electric system facilities, contributed to the cascading blackout affecting San Diego, California.[122] The September 2011 Blackout Report makes clear that, while certain sub-100 kV facilities can affect bulk electric system reliability, entities may not study or communicate their impacts and take appropriate action unless they are properly designated as part of the bulk electric system.[123] Thus, the September 2011 Blackout Report recommended that "WECC, as the [Regional Entity], should lead other entities, including [transmission operators] and [balancing authorities], to ensure that all facilities that can adversely impact [Bulk-Power System] reliability are either designated as part of the [bulk electric system] or otherwise incorporated into planning and operations studies and actively monitored and alarmed in

---

[120] Order No. 743, 133 FERC ¶ 61,150 at P 121.

[121] Order No. 743-A, 134 FERC ¶ 61,210 at P 103.

[122] *See* September 2011 Blackout Report at 96-97.

[123] *Id.* at 7-8.

[real-time contingency analysis] systems."[124] Although the Blackout Report addressed an event in WECC, the recommendations in the Blackout Report should not be limited only to the Western interconnection. Indeed, as explained above, the recommendation in the September 2011 Blackout Report that sub-100 kV facilities be reviewed for inclusion in the bulk electric system is consistent with the Commission's findings in Order Nos. 743 and 743-A.

108. The NERC proposals at issue in this NOPR take steps to address the treatment of sub-100 kV facilities, as well as other facilities, necessary for the operation of the interconnected transmission network, through the exception process, which provides an avenue for Regional Entities, planning authorities, reliability coordinators, transmission operators, transmission planners, balancing authorities, and owners of system elements to submit a request to include a facility in the bulk electric system. We believe that regional entities, reliability coordinators, transmission owners, transmission operators, balancing authorities and other registered entities need to evaluate their sub-100 kV facilities, as well as other facilities, that are necessary to operate the interconnected transmission network in an "appropriate and consistent" manner to determine their potential impacts on bulk electric system reliability and, based on that review, seek to include those facilities in the bulk electric system through this proposed exception process.[125] These

---

[124] *Id*. at 96, Recommendation 17.

[125] NERC's performance of a final review of exception requests under the Rules of Procedure should ensure national consistency under that procedure.

entities have the in-depth, "on the ground" knowledge and expertise of what facilities are critical to reliable operations in their local or regional area. As a result, we believe they bear primary responsibility to analyze the elements within their purview to ensure that the right facilities are included in the bulk electric system. We seek comment on how the relevant entities will conduct the review and seek inclusion of facilities.

109. The Commission expects that these entities will use the exception process as contemplated to include sub-100 kV facilities, and other facilities, necessary for the operation of the interconnected transmission network in the bulk electric system. Nonetheless, we note that relying on these entities alone may, in certain limited circumstances, have the potential to leave out sub-100 kV facilities necessary for the operation of the interconnected transmission network. For example, NERC or the Commission may, in the performance of their statutory functions and general oversight of reliability matters, discover additional sub-100 kV facilities that should be included. The joint NERC-FERC September 2011 Blackout Report, as noted above, is a prime example of this possibility. In addition, while we recognize that the owners and operators of the power grid take their reliability obligations seriously, there may be instances when not all of the facilities necessary for the operation of the interconnected transmission network are included in the bulk electric system.

110. Thus, while we propose to approve the package of reforms submitted by NERC, we seek comment on how the relevant entities will seek inclusion of sub-100 kV elements to ensure that all facilities that are necessary for the operation of the bulk power system are designated as bulk electric system elements consistent with the discussion

above. These comments also should aid NERC, industry, and the Commission in further efforts, already underway in Phase 2 , to refine the bulk electric system definition, the inclusions and exclusions, and the exception process.

111. In addition to general comments on the discussion above, we seek comments on the role NERC should have in initiating the designation of (or directing others to initiate the designation of) sub-100 kV facilities, or any other facilities, necessary for the operation of the interconnected transmission network for inclusion in the bulk electric system. The exception process as proposed does not provide that NERC may initiate an exception request. Given its statutory functions to develop and enforce Reliability Standards and its continent-wide perspective, NERC has technical understanding that may provide valuable assistance in the identification of bulk electric system facilities and elements. For example, NERC conducts disturbance assessments, oversees compliance monitoring and conducts seasonal assessments, all of which provide information and understanding regarding the operations of the bulk electric system. The Commission seeks comment on the role NERC should have in designating sub-100 kV facilities, and other facilities, for inclusion in the bulk electric system, directing Regional Entities or others to conduct such reviews, or itself nominating an element to be included in the bulk electric system.[126]

[126] Since NERC makes the final determination pursuant to the proposed process, a modified process may need to be created if NERC has a role in submitting requests. For example, a different entity would likely need to make the final determination.

112. We also seek comment on the role the Commission should have with respect to the designation of sub-100 kV facilities, or other facilities, necessary for the operation of the interconnected transmission network for inclusion in the bulk electric system. As noted above, there may be circumstances (like the September 2011 Blackout Report) where the Commission, through the performance of its statutory functions, may conclude that certain sub-100 kV facilities not already included in the bulk electric system are necessary for the operation of the interconnected transmission network and thus should be included in the bulk electric system. While, as noted above, we expect that regional entities and others will take affirmative steps to review and include sub-100 kV elements and facilities, and other facilities, necessary for the operation of the interconnected transmission system in the bulk electric system, we seek comment as to how the Commission, if necessary, could ensure that such facilities are considered for inclusion in the bulk electric system. We also seek comment on instances when the Commission itself should designate (or direct others to designate) sub-100 kV facilities, or other facilities, necessary for the operation of the interconnected transmission grid for inclusion in the bulk electric system.[127]

1. Technical Review Panel

113. NERC's proposed exception process provides that "[t]he Regional Entity shall not recommend Disapproval of the Exception Request in whole or in part without first

[127] The Commission contemplates that, if it were to take such a step, it would provide an opportunity for notice and comment.

submitting the Exception Request for review to a Technical Review Panel and receiving its opinion…"[128] The technical review panel member must have the required technical background, must not have participated in the review of the exception request, and not have a conflict of interest in the matter.[129] The Regional Entity is not bound by the opinion of the panel, but the panel's evaluation becomes part of the record associated with the exception request and provided to NERC.

114. We see value in the Regional Entity receiving the independent opinion of a qualified technical review panel. NERC, however, does not explain why the proposed Rules only require a technical review panel to provide an opinion where the Regional Entity recommends disapproval of an exception request. We seek comment from NERC explaining whether it considered obtaining the opinion of a technical panel for all Regional Entity recommendations and, if so, why the review is only required when a Regional Entity disapproves a request. Further, we seek comment on whether NERC should modify the exception process to require Regional Entities to submit all proposed determinations to a technical review panel regardless of the recommendation and receive the panel's opinion on each request.

---

[128] NERC ROP Petition, Att. 1, Proposed App. 5C to the Rules of Procedure, section 5.2.4.

[129] *Id*. at App. 5C, section 5.3.

2. Use of Industry Subject Matter Experts

115. Section 8 of the proposed exception process sets forth the procedures for NERC's review of a Regional Entity's recommendation. The NERC President will appoint a team of at least three persons with the technical background to evaluate an exception request. The members of the review team must have no financial, contractual, employment or other interest in the submitting entity or owner that would present a conflict of interest and must be free of any conflicts of interest in accordance with NERC policies.[130] NERC states that "at the present time NERC anticipates that its review teams would be drawn from NERC staff resources, supplemented by contractors as necessary particularly where needed to provide specific relevant subject matter expertise. However, situations may arise in which NERC may need to call on industry subject matter experts to participate as members of review teams."[131]

116. We support NERC's proposal to use staff resources, supplemented by contractors as necessary, to make up the exception request review teams. We believe that consistent appointment of the same NERC staff and contractor resources, based on subject matter expertise, will promote a more uniform and consistent review of the Regional Entities' exception request recommendations.

---

[130] NERC ROP Petition at 31.

[131] *Id*. at n. 29.

D. The Commission Proposes to Approve NERC's Detailed Information Form

117. As described above, NERC developed the Detailed Information Form that the Regional Entity and NERC can use in evaluating whether or not the elements that are the subject of an exception request are necessary for operating the interconnected transmission network. The Detailed Information Form encompasses a wide range of potential configurations and appears to ensure that a consistent baseline of technical information is provided with all exception requests, in addition to the specific information and arguments provided by the submitting entity in support of its exception request. The information that the applicant may submit in support of an exception request will not be limited to the Detailed Information Form. The applicant will be expected to submit all relevant data, studies and other information that supports its exception request. Further, NERC may ask the submitting entity to provide other data, studies and information in addition to the Detailed Information Form and the other information included by the applicant in the exception request.

118. We believe that this information will provide consistency with respect to the technical information provided with all exception requests and is an equally efficient and effective approach to developing a substantive set of technical criteria for granting and rejecting exception requests. Accordingly, we propose to approve the Detailed Information Form included in NERC's filing.

E. The Commission Proposes to Approve NERC's Implementation Plan for the Revised Definition of Bulk Electric System

119. As noted above, NERC requests that the revised definition "should be effective on the first day of the second calendar quarter after receiving applicable regulatory approval, or, in those jurisdictions where no regulatory approval is required, the revised [bulk electric system definition] should go into effect on the first day of the second calendar quarter after its adoption by the NERC Board.[132]

120. NERC also requests that compliance obligations for all elements newly-identified to be included in the bulk electric system based on the revised definition should begin twenty-four months after the applicable effective date of the revised definition. While the Commission stated in Order Nos. 743 and 743-A that the transition period should not exceed 18 months from the date of Commission approval of the revised definition, the Commission also stated that it could approve a longer transition period based on specific justification.[133] NERC states that sufficient time is needed: (1) to implement transition plans in order to accommodate any changes resulting from the revised definition; (2) for entities to file for exceptions, and for the Regional Entities and NERC to process those exceptions to a final determination, pursuant to the proposed exception process; and (3) for owners of facilities and elements that are newly-included in the bulk electric system based on the definition to train their personnel on compliance with the Reliability

[132] NERC BES Petition at 34.

[133] Order No. 743, 133 FERC ¶ 61,150 at P 131.

Standards applicable to the newly-included facilities and elements, so that these entities can achieve compliance with applicable Reliability Standards by the end of the transition period. We believe that NERC has provided adequate justification for its implementation plan, as discussed above. Thus, although NERC's plan exceeds the 18 month implementation period set forth in Order No. 743, we propose to approve NERC's implementation plan.

F. NERC List of Facilities Granted Exceptions

121. In Order No. 743, the Commission stated that "a Commission staff audit would review the application of the exemption criteria developed by NERC in NERC's or a Regional Entity's determination to approve an exemption for a particular facility." The Commission also stated that "to facilitate such audits, the ERO should maintain a list of exempted facilities that can be made available to the Commission on request. NERC can decide how best to maintain the list, including determining whether or not to post it on the NERC website."[134]

122. NERC states that the proposed exception process does not include provisions for NERC to maintain a list of facilities that have received exceptions, as this is an internal administrative matter for NERC to implement that does not need to be embedded in NERC Rules of Procedure.[135] NERC states it will develop a specific internal plan and

---

[134] *Id.* PP 117, 119.

[135] NERC ROP Petition at 49.

procedures for maintaining a list of facilities for which exceptions have been granted. Further, NERC explains that it has not yet determined how the list will be organized and structured and under what conditions the list will be made available on the NERC web site or otherwise made available to any entities other than the Commission, citing concerns about confidential information and critical energy infrastructure information.[136]

123. We understand that NERC is continuing to develop the details on how it will maintain the list of facilities that have received exceptions. However, we also consider the maintenance of this list of facilities an important feature for tracking exceptions.[137] Thus, we propose that NERC file an informational filing within 90 days of the effective date of a final rule, detailing its plans to maintain a list and how it will make this information available to the Commission, Regional Entities, and potentially to other interested persons. We seek comment from NERC whether this deadline provides adequate time for NERC to finalize its plans and submit an informational filing.

124. While NERC states that it will maintain a list of facilities that have received an exception pursuant to the case-specific exception process, the petition does not indicate whether NERC will track an entity's "declassification" of current bulk electric system facilities based on the entity's self-application of the bulk electric system definition. It appears that, in some circumstances, the appropriate Regional Entity would receive a

---

[136] *Id*.

[137] Order No. 743, 133 FERC ¶ 61,150 at PP 117, 119.

request that an entity be removed from the NERC Compliance Registry. For example, if an entity determines that its entire system satisfies the exclusion E1 for radial systems, the entity could apply to the appropriate Regional Entity to be removed from the NERC Compliance Registry. However, in other circumstances, it is not clear what, if any, notification an entity would provide to NERC or a Regional Entity when the entity self-determines that an element is no longer part of the bulk electric system. For example, a large utility with hundreds or thousands of transmission lines may initially determine that a configuration on its system does not qualify for the exclusion E3 local network exclusion, but subsequently determines that the configuration can be excluded. NERC's petition does not indicate whether an entity in such circumstance is obligated to inform NERC or the appropriate Regional Entity of that self-determination. It appears that NERC and the Regional Entities would need this information for their compliance programs, for audit purposes, and to understand the contours of the bulk electric system within a particular region. Accordingly, we seek comment on whether NERC's proposal should be modified to include an obligation for the registered entity to inform NERC or the Regional Entity of the entity's self-determination through application of the definition and specific exclusions E1 through E4 that an element is no longer part of the bulk electric system.

III. Information Collection Statement

125. The following collection of information contained in this Proposed Rule is subject to review by the Office of Management and Budget (OMB) under section 3507(d) of the Paperwork Reduction Act of 1995.[138] OMB's regulations require approval of certain information collection requirements imposed by agency rules.[139] The Commission solicits comment on the Commission's need for this information, whether the information will have practical utility, the accuracy of the burden estimates, ways to enhance the quality, utility, and clarity of the information to be collected or retained, and any suggested methods for minimizing respondents' burden, including the use of automated information techniques. Specifically the Commission asks that any revised burden estimates submitted by commenters be supported by sufficient detail to understand how the estimates are generated.

126. In Order No. 693, the Commission approved NERC's definition of the term bulk electric system and the associated information requirements.

127. In Order No. 743, the Commission directed NERC to develop a revised "bulk electric system" definition. The Commission explained that, by directing NERC to develop a revised definition, "the Commission is maintaining the status quo (i.e., the current bulk electric system definition) until the Commission approves a revised

[138] 44 U.S.C. § 3507(d) (2006).

[139] 5 C.F.R. § 1320.11 (2011).

definition. Thus, the Commission's action does not add to or increase entities' reporting burden."[140]

128. The immediate NOPR proposes to approve the revision to the definition of "bulk electric system" developed by NERC and an exception process to include or exclude specific elements in the definition of "bulk electric system" on a case-by-case basis. The Commission is basing its burden estimate below on the revised definition of "bulk electric system" developed by NERC.

129. The proposal in this NOPR would result in entities reviewing systems and creating qualified asset lists, submitting exception requests where appropriate, and certain responsible entities having to comply with requirements to collect and maintain information in mandatory Reliability Standards with respect to certain facilities for the first time.

130. Public Reporting Burden: While the Commission requests comment concerning the information collections proposed in this NOPR and the associated burden estimates, in particular, the Commission requests comment on the following issues.

131. First, we request comment on the estimated number of entities that will have an increased reporting burden associated with the identification of new bulk electric system elements as a result of the modified definition. NERC states in its filing that "[i]t was not the intent nor the expectation of either the [standard drafting team] or NERC to either

[140] Order No. 743, 133 FERC ¶ 61,150 at P 157.

expand or reduce the scope of the [bulk electric system], or (with the likely exception of the NPCC Region) to increase or decrease the number of Elements included in the [bulk electric system], through the revised [bulk electric system] definition as compared to the current [bulk electric system] definition."[141] NERC adds that it has no specific basis to determine to "the extent Elements currently included in the [bulk electric system] will become not included, nor to what extent Elements currently not included will become included."[142] In developing an estimate of the reporting burden associated with the inclusion of additional elements, like NERC, we assume that entities in the NPCC Region will be most affected, with a lesser affect in other regions.[143]

132. We reviewed Compliance registry information for the NPCC Region to determine the number and types of registered entities in the U.S. portion of the NPCC Region.[144] We expect that transmission owners and distribution providers, and some generator owners, are most likely to identify new elements. Based on this, we estimate a range from 66 to 155 affected entities in the NPCC region, and for OMB reporting purposes identify below a median number of 111 affected entities in the NPCC region. Further,

---

[141] NERC BES Petition at 37.

[142] *Id*.

[143] While Reliability Standards do not require the reporting of information directly to the Commission, the application of Reliability Standards to additional facilities will have associated information collection and retention obligations.

[144] NPCC Compliance Registry information is available on the NPCC website at: https://www.npcc.org/Compliance/Default.aspx.

consistent with NERC's explanation, we do not expect a significant number of registered entities outside of the NPCC region to identify new elements under the revised bulk electric system definition. Accordingly, we estimate a total of 75 entities outside of the NPCC Region having new "implementation plan and compliance" related reporting burdens. We seek comment on these estimates to assist the Commission in arriving at final estimates.

133. Second, we seek comment on the reporting burden associated with exception requests. NERC indicates that "there is currently not a basis for estimating the numbers of Exceptions Requests that will be submitted…."[145] We agree with NERC that there is difficulty in estimating a specific number of exception requests as this is a new process with no "track record." Thus, rather than estimating a specific number of exception requests, we estimate a range of exception requests that may be submitted. As indicated in the table below, from the 1,730 total transmission owners, generator owners and distribution providers in the Compliance Registry, we estimate a range of 87 to 433 exception requests per year for each of the first two years after the effective date of a final rule. We request comment on this estimated range to assist the Commission in arriving at a final estimate of the number of possible exception requests.

134. Third, as indicated above, our estimates are based in part on an expectation that transmission owners, generator owners and distribution providers will experience more

[145] NERC BES Petition at 38.

significant reporting burdens than other categories of registered entities. We seek comment on this expectation, and whether and to what extent other categories of registered entities (in addition to transmission owners, generator owners and distribution providers) may have a public reporting burden.

135. We estimate that the increased Public Reporting Burden for this Proposed Rule is as follows:

Requirement	Number and Type of Entity[146] (1)	Number of Responses Per Entity (2)	Average Number of Hours per Response (3)	Total Burden Hours (1)*(2)*(3)
System Review and List Creation[147]	333 Transmission Owners	1 response	80 (engineer hours)	26,640 Yr 1
	843 Generator Owners		16 (engineer hours)	13,488 Yr 1
	554 Distribution Providers		24 (engineer hours)	13,296 Yr 1

[146] The "entities" listed in this table are describing a role a company is registered for in the NERC registry. For example, a single company may be registered as a transmission owner and generator owner. The total number of companies applicable to this rule is 1,522, based on the NERC registry. The total number of estimated roles is 1,730.

[147] This requirement corresponds to Step 1 of NERC's proposed transition plan, which requires each U.S. asset owner to apply the revised bulk electric system definition to all elements to determine if those elements are included in the bulk electric system pursuant to the revised definition. *See* NERC BES Petition at 38.

Exception Requests[148]	1,730 total Transmission Owners, Generator Owners and Distribution Providers	.15 responses in Yrs 1 and 2	94 (60 engineer hrs, 32 record keeping hrs, 2 legal hrs)	24,393 hrs in Yrs 1 and 2
		0.01156 responses in Yr 3 and ongoing		1,880 hrs in Yr 3 and ongoing
Regional and ERO Handling of Exception Requests[149]	NERC and 8 Regional Entities	1 response	1,386.67 hrs	12,480 hrs in Yrs 1 and 2
Implementation Plans and Compliance[150]	111 NPCC Region Registered Entities[151]	1 response	700 hrs in Yrs 1 and 2	77,700 hrs in Yrs 1 and 2
			350 hrs in Yr 3 and ongoing	38,850 hrs in Yr 3 and ongoing
	75 Registered Entities from	1 response	700 hrs in Yrs 1 and 2	52,500 hrs in Yrs 1 and 2

[148] We recognize that not all 1,730 transmission owners, generator owners and distribution providers will submit an exception request. Rather, from the total 1,730 entities, we estimate an average of 260 requests per year in the first two years, based on a low to high range of 87 to 433 requests per year. Therefore, the estimated total number of hours per year for years 1 and 2, using an average of 260 requests per year, is 24,393 hours. We estimate 20 requests per year in year 3 and ongoing.

[149] Based on the assumption of two full-time equivalent employees added to NERC staff and 0.5 full-time equivalent employees added to each region's staff, each full-time equivalent at $120,000/year (salary + benefits).

[150] The Commission does not expect a significant number of registered entities outside of the NPCC region to identify new elements under the revised bulk electric system definition. NERC also states that the other Regional Entities do not expect an extensive amount of newly-included facilities. *See* NERC BES Petition at 38. "Compliance" refers to entities with new elements under the new bulk electric system definition required to comply with the data collection and retention requirements in certain Reliability Standards that they did not previously have to comply with.

[151] The estimated range of affected NPCC Region Registered Entities is from 66 to 155 entities.

	7 other Regions		350 hrs in Yr 3 and ongoing	26,250 hrs in Yr 3 and ongoing
TOTALS				220,497 hrs in Yr 1
				167,073 hrs in Yr 2
				66,980 hrs in Yr 3 and ongoing

Information Collection Costs: The Commission seeks comment on the costs to comply with these requirements. These cost estimates are calculated using the average of the ranges suggested in the burden hour estimates. It has projected the annual cost to be:

- Year 1: **$13,641,200**
- Year 2: **$10,435,760**
- Year 3 and ongoing: **$4,343,520**.

For the first two burden categories above, the loaded (salary plus benefits) costs are: $60/hour for an engineer; $27/hour for recordkeeping; and $106/hour for legal. The breakdown of cost by item and year follows:

- **System Review and List Creation (year 1 only)**: (26,640 hrs + 13,488 hrs + 13,296 hrs) =53,424 hrs * 60/hr = $3,205,440.
- **Exception Requests (years 1 and 2)**: (sum of hourly expense per request * number of exception requests) = ((60 hrs * $60/hr) + (32 hrs * $27/hr) + (2hrs * $106/hr)) * 260 requests) = $1,215,760.

- **Exception Requests (year 3)**: (sum of hourly expense per request * number of exception requests) = ((60 hrs * $60/hr) + (32 hrs * $27/hr) + (2 hrs * $106/hr)) * 20 requests) = $93,520.
- **Regional and ERO handling of Exception Requests**: Between NERC and regional entities we estimate 6 full time equivalent (FTE) engineers will be added at an annual cost of $120,000/FTE ($120,000/FTE * 6 FTE = $720,000). This cost is only expected in years 1 and 2.
- **Implementation Plans and Compliance[152] (years 1 and 2)**: (hourly expense per entity * hours per response * sum of NPCC and non-NPCC entities) = ($64/hour * 700 hours per response * 186 responses) = $8,332,800.
- **Implementation Plans and Compliance (year 3 and beyond):** We estimate the ongoing cost for year 3 and beyond, at 50% of the year 1 and 2 costs, to be $4,166,400.

Title: FERC-725-J "Definition of the Bulk Electric System"[153]

---

[152] The cost and hourly burden calculations for this category are based on a past assessment (NPCC Assessment of Bulk Electric System Definition, September 14, 2009.). In that assessment NPCC indicated $8.9 million annually for operations, maintenance and additional costs. We estimated that roughly half of that cost actually relates to information collection burden. Using the resulting figure, we used a composite wage and benefit figure of $64/hour to estimate the hourly burden figures presented in the burden table.

[153] All of the information collection requirements for years 1-3 in the proposed rule are being accounted for under the new collection FERC-725J.

Action: Proposed Collection of Information

OMB Control No: To be determined

Respondents: Business or other for profit, and not for profit institutions.

Frequency of Responses: On Occasion

Necessity of the Information: The proposed revision to NERC's definition of the term bulk electric system, if adopted, would implement the Congressional mandate of the Energy Policy Act of 2005 to develop mandatory and enforceable Reliability Standards to better ensure the reliability of the nation's Bulk-Power System. Specifically, the proposal would ensure that certain facilities needed for the operation of the nation's bulk electric system are subject to mandatory and enforceable Reliability Standards.

Internal review: The Commission has reviewed the proposed definition and made a determination that its action is necessary to implement section 215 of the FPA. The Commission has assured itself, by means of its internal review, that there is specific, objective support for the burden estimate associated with the information requirements.

136. Interested persons may obtain information on the reporting requirements by contacting the Federal Energy Regulatory Commission, Office of the Executive Director, 888 First Street, NE, Washington, DC 20426 [Attention: Ellen Brown, e-mail: DataClearance@ferc.gov, phone: (202) 502-8663, fax: (202) 273-0873].

137. Comments concerning the information collections proposed in this NOPR and the associated burden estimates, should be sent to the Commission in this docket and may also be sent to the Office of Management and Budget, Office of Information and Regulatory Affairs [Attention: Desk Officer for the Federal Energy Regulatory

Commission]. For security reasons, comments should be sent by e-mail to OMB at the following e-mail address: oira_submission@omb.eop.gov. Please reference FERC-725J and the docket numbers of this Proposed Rulemaking (Docket Nos. RM12-6-000 and RM12-7-000) in your submission.

IV. Regulatory Flexibility Act Analysis

138. The Regulatory Flexibility Act of 1980 (RFA)[154] generally requires a description and analysis of Proposed Rules that will have a significant economic impact on a substantial number of small entities. As discussed above, the Commission believes that the immediate effect of the proposal to approve the modification to the definition of bulk electric system and the exception process would likely be limited to certain transmission owners, generator owners and distribution service providers, as well as NERC and Regional Entities. Many transmission owners, generator owners and distribution service providers do not fall within the definition of small entities.[155] The Commission estimates

[154] 5 U.S.C. §§ 601-612 (2006).

[155] The RFA definition of "small entity" refers to the definition provided in the Small Business Act (SBA), which defines a "small business concern" as a business that is independently owned and operated and that is not dominant in its field of operation. *See* 15 U.S.C. § 632 (2006). According to the SBA, an electric utility is defined as "small" if, including its affiliates, it is primarily engaged in the generation, transmission, and/or distribution of electric energy for sale and its total electric output for the preceding fiscal year did not exceed 4 million megawatt hours.

that approximately 418[156] of the 1,730 registered transmission owners, generator owners and distribution service providers may fall within the definition of small entities.[157]

139. The Commission estimates that of the 418 small entities affected there are 50 within the NPCC region that would have to comply with the Proposed Rule. The Commission assumes that the Proposed Rule would affect more small entities in the NPCC Region than those outside NPCC as it is assumed that there are more elements in NPCC that would be added to the bulk electric system based on the new definition than elsewhere. The Commission estimates the first year affect on small entities within the NPCC region to be $39,414.[158] This figure is based on information collection costs plus

---

[156] We note that in Order No. 693, the Commission estimated that the Reliability Standards in that the Final Rule would apply to approximately 682 small entities. *See* Order No. 693, FERC Stats. & Regs. ¶ 31,242 at P 1940. Because the current Proposed Rule would affect a smaller subset of the categories of registered entities, our estimate is lower than that cited in Order No. 693.

[157] The number of small entities is generated by comparing the NERC compliance registry with data submitted to the Energy Information Administration on Form EIA–861. Note, these numbers do not account for companies that may be registered in more than one role. For companies registered in more than one role, the burden will likely be higher than for those companies registered in only one role. We estimate that there are 381 companies and 418 registered roles, meaning that several companies are registered in more than one role. We do not believe this affects the certification below.

[158] For companies registered as more than one entity in the NERC compliance registry this figure will increase accordingly. That is, if a company is registered as a transmission owner and generator owner then the cost burden would be $78,828 ($39,414*2 = $78,828).

additional costs for compliance.[159] The Commission estimates the average annual affect per small entity outside of NPCC will be less than for the entities within NPCC. The Commission does not consider this to be a significant economic impact for either class of entities because it should not represent a significant percentage of the operating budget. Accordingly, the Commission certifies that this Proposed Rule will not have a significant economic impact on a substantial number of small entities. The Commission seeks comment on this certification.

V. Environmental Analysis

140. The Commission is required to prepare an Environmental Assessment or an Environmental Impact Statement for any action that may have a significant adverse effect on the human environment.[160] The Commission has categorically excluded certain actions from this requirement as not having a significant effect on the human environment. The actions proposed here fall within the categorical exclusion in the Commission's regulations for rules that are clarifying, corrective or procedural, for

[159] We use fifty percent of the first year "number of hours per response" figure in the information collection statement for calculation under the assumption that smaller entities do not have complicated systems or will not have as many new elements on average as larger entities do.

[160] Order No. 486, *Regulations Implementing the National Environmental Policy Act*, 52 FR 47897 (Dec. 17, 1987), FERC Stats. & Regs. Regulations Preambles 1986-1990 ¶ 30,783 (1987).

information gathering, analysis, and dissemination.[161] Accordingly, neither an environmental impact statement nor environmental assessment is required.

VI. Comment Procedures

141. The Commission invites interested persons to submit comments on the matters and issues proposed in this notice to be adopted, including any related matters or alternative proposals that commenters may wish to discuss. Comments are due [INSERT DATE 60 days after publication in the **FEDERAL REGISTER**]. Comments must refer to Docket Nos. RM12-6-000 and RM12-7-000, and must include the commenter's name, the organization they represent, if applicable, and their address in their comments.

142. The Commission encourages comments to be filed electronically via the eFiling link on the Commission's web site at http://www.ferc.gov. The Commission accepts most standard word processing formats. Documents created electronically using word processing software should be filed in native applications or print-to-PDF format and not in a scanned format. Commenters filing electronically do not need to make a paper filing.

143. Commenters that are not able to file comments electronically must send an original of their comments to: Federal Energy Regulatory Commission, Secretary of the Commission, 888 First Street NE, Washington, DC, 20426.

[161] 18 C.F.R. § 380.4(a)(5).

144. All comments will be placed in the Commission's public files and may be viewed, printed, or downloaded remotely as described in the Document Availability section below. Commenters on this proposal are not required to serve copies of their comments on other commenters.

VII. Document Availability

145. In addition to publishing the full text of this document in the Federal Register, the Commission provides all interested persons an opportunity to view and/or print the contents of this document via the Internet through the Commission's Home Page (http://www.ferc.gov) and in the Commission's Public Reference Room during normal business hours (8:30 a.m. to 5:00 p.m. Eastern time) at 888 First Street, NE, Room 2A, Washington DC 20426.

146. From the Commission's Home Page on the Internet, this information is available on eLibrary. The full text of this document is available on eLibrary in PDF and Microsoft Word format for viewing, printing, and/or downloading. To access this document in eLibrary, type the docket number excluding the last three digits of this document in the docket number field.

147. User assistance is available for eLibrary and the Commission's website during normal business hours from the Commission's Online Support at 202-502-6652 (toll free at 1-866-208-3676) or email at ferconlinesupport@ferc.gov, or the Public Reference Room at (202) 502-8371, TTY (202)502-8659. E-mail the Public Reference Room at public.referenceroom@ferc.gov.

List of subjects in 18 CFR Part 40

Electric power; Electric utilities; Reporting and record keeping requirements.

By direction of the Commission. Commissioner Clark voting present.

Nathaniel J. Davis, Sr.,
Deputy Secretary.

[FR Doc. 2012-15944 Filed 07/03/2012 at 8:45 am; Publication Date: 07/05/2012]